TEK INSTRUCTION MANUAL

Part No. 070-3821-00
Product Group 20

690SR
TELEVISION COLOR MONITOR

Tektronix®
COMMITTED TO EXCELLENCE

TEK INSTRUCTION MANUAL

Part No. 070-3821-00
Product Group 20

690SR

TELEVISION COLOR MONITOR

Please Check for CHANGE INFORMATION at the Rear of This Manual

First Printing AUG 1981
Revised OCT 1984

Tektronix®
COMMITTED TO EXCELLENCE

Copyright © 1981 Tektronix, Inc. All rights reserved. Contents of this publication may not be reproduced in any form without the written permission of Tektronix, Inc.

Products of Tektronix, Inc. and its subsidiaries are covered by U.S. and foreign patents and/or pending patents.

TEKTRONIX, TEK, SCOPE-MOBILE, and are registered trademarks of Tektronix, Inc. TELEQUIPMENT is a registered trademark of Tektronix U.K. Limited.

Printed in U.S.A. Specification and price change privileges are reserved.

PREFACE

This manual documents the TEKTRONIX 690SR TELEVISION COLOR MONITOR. The 690SR mainframe is designed for professional use in television broadcast, closed circuit, industrial, and educational fields. The mainframe utilizes a high-resolution 19-inch color crt that provides four times the number of phosphor dots as a standard color crt.

This preface describes the contents of this manual, with a brief description of each section within the manual.

The Table of Contents is a detailed list of all important pieces of information, including illustrations and tables.

The manual is arranged into two parts, Operating Information and Service & Installation. The two parts are separated by a goldenrod page with hash marks along the outer edge. All pertinent information regarding the operation of the instrument is located in the Operating Information part. This will be of use to both the operator and the service technician. The Service & Installation part contains that information necessary to effectively install, service, and calibrate the instrument. This information should be useful only to qualified service technicians.

The Operating Information part of the manual includes Sections 1, 2, and 3:

Section 1–(General Information) includes a general description of the instrument, damage inspection, an accessories list, and repackaging information. This section is preceded by operator and service safety summaries.

Section 2–(Operator's Familiarization) includes information on Mains voltage and frequency requirements, power connections, input connectors, controls and indicator lights, touch-up adjustments for convergence, and a brief block diagram description.

Section 3–(Specification) includes performance conditions, specification classifications, and electrical, environmental, and physical characteristics.

The Service & Installation part includes Sections 4 through 13:

Section 4–(Installation) includes information on making a preliminary check of operation, details necessary for electrical installation, and rack-mounting instructions.

Section 5–(Theory of Operation) begins with a general overview of the instrument, followed by a detailed circuit description.

Section 6–(Performance Check Procedure) includes a list of test equipment required, a preliminary setup procedure, and a performance check procedure.

Section 7–(Adjustment Procedure) includes a list of test equipment required, a short-form adjustment procedure (by board), a preliminary setup procedure, and a detailed adjustment procedure (by board).

Section 8–(Troubleshooting) includes information on aids to troubleshooting, component identification, a list of useful troubleshooting equipment, connecting circuit boards for accessibility in servicing, a procedure for isolating troubles to the component level, and a detailed procedure for troubleshooting the low-voltage power supply.

Section 9–(Maintenance) provides information needed for preventive maintenance and corrective maintenance including the obtaining of replacement parts, details on selected components, assembly and circuit board removal and replacement, picture tube (crt) replacement, and a special precalibration procedure to follow after replacement of certain critical parts.

Section 10–(Options) documents any catalog options available with the instrument.

Section 11–(Replaceable Electrical Parts) includes ordering information, part numbers, and descriptions for all replaceable electrical parts.

Section 12–(Diagrams and Circuit Board Illustrations) includes servicing illustrations, a block diagram, schematics, circuit board illustrations, waveforms, and parts locating charts.

Section 13–(Replaceable Mechanical Parts) refers to a series of exploded-view drawings of the assemblies in the instrument, and lists ordering information and descriptions for all replaceable mechanical parts.

Accessories lists items supplied as Standard Accessories with the instrument. Some options and optional accessories are also listed to provide information on accessory items normally found useful with the instrument.

Change and correction information after the manual has been printed is located behind a tabbed page at the rear of the manual.

The text and diagrams in this manual are in accord with, and based on, the following standards of the American National Standards Institute, Inc. (ANSI):

ANSI Y1.1 - 1972, Abbreviations
ANSI Y32.2 - 1975, Graphic Symbols
ANSI Y32.14 - 1973, Graphic Symbols (Logic)
ANSI Y32.16 - 1975, Reference Designators

TABLE OF CONTENTS

	Page
PREFACE	i
LIST OF ILLUSTRATIONS	v
LIST OF TABLES	viii
OPERATORS SAFETY SUMMARY	ix
SERVICE SAFETY SUMMARY	xi

PART I—OPERATING INFORMATION

Section 1	**GENERAL INFORMATION**	
	Product Description	1-1
	PHYSICAL INSPECTION	1-1
	Damage Inspection	1-1
	Accessories List	1-2
	Repackaging	1-2
Section 2	**OPERATOR'S FAMILIARIZATION**	
	Interface Module	2-1
	Mains Voltage and Frequency Requirements	2-1
	Power Connections	2-1
	FRONT PANEL CONTROLS & INDICATOR LIGHTS	2-1
	FRONT DRAWER SWITCHES, INDICATOR LIGHT, & ADJUSTMENTS	2-1
	CONVERGENCE TOUCH-UP	2-4
	BLOCK DIAGRAM DESCRIPTION	2-6
	Introduction	2-6
	Video Amplifier A13	2-6
	Raster Control A9	2-6
	Vertical Deflection A10	2-6
	Horizontal Deflection A11	2-7
	Convergence A8	2-7
	Convergence Output A14	2-7
	High Voltage Power Supply A7A2	2-7
	Low Voltage Power Supply A7A1	2-7
Section 3	**SPECIFICATION**	
	Performance Conditions	3-1
	Specification Classifications	3-1
	ELECTRICAL CHARACTERISTICS—DISPLAY	3-1
	ELECTRICAL CHARACTERISTICS—VIDEO	3-4
	ELECTRICAL CHARACTERISTICS—TIMING & DEFLECTION	3-5
	ELECTRICAL CHARACTERISTICS—LV POWER SUPPLY	3-6
	ELECTRICAL CHARACTERISTICS—HV SUPPLY	3-6
	ENVIRONMENTAL CHARACTERISTICS	3-7
	PHYSICAL CHARACTERISTICS	3-7
	CRT OPTIONS	3-8

WARNING

THE FOLLOWING SERVICING INSTRUCTIONS ARE FOR USE BY QUALIFIED PERSONNEL ONLY. TO AVOID PERSONAL INJURY, DO NOT PERFORM ANY SERVICING OTHER THAN THAT CONTAINED IN OPERATING INSTRUCTIONS UNLESS YOU ARE QUALIFIED TO DO SO.

PART II—SERVICE & INSTALLATION

		Page
Section 4	**INSTALLATION**	
	ELECTRICAL INSTALLATION	4-1
	Preliminary Check (Optional)	4-1
	Power Source	4-1
	Mains Voltage and Frequency	4-1
	Changing Mains Voltage and Fuse	4-1
	Preset Jumper Positions	4-2
	Power Connection	4-5
	Initial Turn On	4-5
	RACKMOUNTING	4-6
	PRELIMINARY	4-6
	Instrument Dimensional Drawing and Ventilation Areas	4-6
	Description of Slide-Out Track Assemblies	4-6
	RACKMOUNTING IN A CABINET RACK	4-8
	Rack Width	4-8
	Rack Depth	4-8
	Mounting Procedure	4-9
	Adjustments	4-10
	Maintenance	4-10
Section 5	**THEORY OF OPERATION**	
	Introduction	5-1
	BLOCK DIAGRAM DESCRIPTION	5-1
	DETAILED CIRCUIT DESCRIPTION	5-3
	Video Amplifier (Diagrams 2, 3, and 4)	5-3
	Vertical Raster Control (Diagram 5)	5-7
	Horizontal Raster Control (Diagram 6)	5-10
	Vertical Deflection (Diagram 7)	5-13
	Horizontal Deflection (Diagrams 8 and 9)	5-16
	Convergence Control (Diagrams 10 through 14)	5-27
	High Voltage Power Supply (Diagram 15)	5-37
	Low Voltage Power Supply (Diagram 16)	5-43

TABLE OF CONTENTS (cont)

		Page
Section 6	**PERFORMANCE CHECK PROCEDURE**	
	Recommended Test Equipment	6-1
	Television Video Test Signal Generator	6-6
	Television Decoder Interface Module	6-6
	Linearity Graticule	6-7
	PERFORMANCE CHECK PROCEDURE	6-7
	Preliminary Procedure	6-7
	1. Check Aspect Ratio, Geometric Distortion, and Incremental Linearity	6-8
	2. Check Orthogonality and Convergence	6-8
	3. Check Contrast Control and Preset Ranges	6-8
	4. Check Black Level Control and Preset Ranges	6-9
	5. Check Colorimetry	6-10
	6. Check Raster Size Change Due to Changes in Anode Current	6-10
	7. Check Mains Frequency Interference	6-11
	8. Check Horizontal Jitter and Vertical Interlace Jitter	6-12
	9. Check Vertical Positioning Range	6-12
	10. Check Vertical Scan Start Jitter	6-13
	11. Check Reference Input Signal	6-14
	12. Check Vertical Retrace Blanking	6-14
	13. Check Horizontal Retrace Blanking	6-15
	14. Check Triggered Horizontal Timing	6-15
	15. Check TV Pulse Response	6-17
	16. Check Field-Time Distortion	6-18
	17. Check Line-Time Distortion	6-19
	18. Check Low-Frequency Non-Linear Distortion	6-20
	19. Check Contrast and Black Level Tracking	6-21
	20. Check Signal-to-Noise Ratio	6-22
	21. Check Channel-to-Channel Isolation	6-23
	22. Check Differential Gain	6-24
	23. Check 690SR Input Voltage Range	6-26
	24. Check Maximum Operating Range	6-27
	25. Check CRT Heater Supply	6-28
	26. Check Anode Supply Voltage	6-28
Section 7	**ADJUSTMENT PROCEDURE**	
	Recommended Test Equipment	7-1
	Television Video Test Signal Generator	7-2
	Television Decoder Interface Module	7-3
	Linearity Graticule	7-3
	SHORT-FORM ADJUSTMENT PROCEDURE	7-4
	ADJUSTMENT PROCEDURE (Long Form)	7-10
Section 8	**TROUBLESHOOTING**	
	Troubleshooting Aids	8-1
	Component Identification	8-2
	Troubleshooting Equipment	8-3
	Circuit Board Service Position	8-4
	Troubleshooting Procedure	8-6
	Low Voltage Power Supply A7A1 Troubleshooting Procedure	8-8
Section 9	**MAINTENANCE**	
	PREVENTIVE MAINTENANCE	9-1
	Cleaning	9-1
	Visual Inspection	9-1
	Transistor and Integrated Circuit Checks	9-1
	Static-Sensitive Components	9-2
	Internal Fuses	9-3
	CORRECTIVE MAINTENANCE	9-3
	Obtaining Replacement Parts	9-3
	Nonreplaceable Parts	9-3
	Selected Components	9-3
	Torque Specifications	9-4
	Removing Modular Assemblies	9-5
	Replacing Circuit Boards	9-5
	Power Supply A7 Removal	9-7
	Switching Transistors Q205 and Q305 Removal	9-10
	Transformer T315 Removal	9-11
	High Voltage Transformer Assembly A7A2A3 Removal	9-12
	Picture Tube (CRT) Replacement	9-14
	Deflection Yoke A4 Replacement	9-17
	Convergence Yoke Assembly A5 and Blue Lateral Board A5A1 Removal	9-18
	Purity Ring A6 Removal	9-19
	SPECIAL PRECALIBRATION PROCEDURES	9-19
	Horizontal Deflection Board A11A1 Precalibration	9-19
	Anode Current Limit Adjustment	9-23
	Overvoltage Calibration	9-24
Section 10	**OPTIONS**	
Section 11	**REPLACEABLE ELECTRICAL PARTS**	
Section 12	**DIAGRAMS & CIRCUIT BOARD ILLUSTRATIONS**	
Section 13	**REPLACEABLE MECHANICAL PARTS**	
Change Information		

LIST OF ILLUSTRATIONS

Fig. No.		Page
1-1	The TEKTRONIX 690SR Television Color Monitor	
1-2	Repackaging the instrument	1-2
2-1	Front view of 690SR mainframe. The thumbscrews under the handles hold the instrument securely in a rack	2-2
2-2	Top view inside of front drawer	2-3
2-3	Block Diagram	2-3
4-1	Obtaining access to the Mains Connector jumper P427 in the power supply assembly	4-3
4-2	Power cord retaining plate	4-6
4-3	690SR mainframe dimensions and ventilation areas	4-7
4-4	Rackmounting hardware for right side of instrument	4-8
4-5	Rack rail hole spacing. Dimensions above are given in inches	4-9
4-6	Rackmount hole spacing	4-10
4-7	Mounting the left stationary section to the rails in the cabinet rack	4-11
4-8	Installing and removing the instrument	4-11
5-1	Video amplifier timing	5-4
5-2	Simplified schematic of green video amplifier	5-5
5-3	Vertical raster control timing	5-8
5-4	Signal at TP650 for various settings of Side Tilt adjustment R652	5-9
5-5	Geometry and focus correction IC U640 input and output waveforms	5-9
5-6	Effect of top and bottom side and/or pin tilt waveform generator adjustments on "bow-tie" top and bottom pin and/or tilt waveform	5-11
5-7	Horizontal raster control timing	5-11
5-8	Relationship of horizontal width control voltage level with horizontal ramp	5-12
5-9	Block diagram of the vertical deflection amplifier	5-13
5-10	Simplified schematic diagram of the vertical deflection amplifier	5-14
5-11	Vertical deflection current through the vertical deflection yoke and its effect on the display	5-15
5-12	Resonant scan sequence in the horizontal deflection ramp generator	5-17
5-13	Simplified schematic of the horizontal deflection ramp amplifier control circuitry	5-18
5-14	Effect of modulated horizontal width control voltage on the display	5-19
5-15	Horizontal centering circuit: (A) Relationship of circuit to horizontal deflection ramp circuits; (B) simplified schematic of circuit	5-23
5-16	Effects of horizontal linearity balance circuit on horizontal deflection yoke current	5-24
5-17	Timing for delay stabilization circuit	5-25
5-18	Error voltage parabola at pin 1 of U321A	5-26
5-19	Effect of convergence yoke and blue lateral board on red, green and blue beams	5-28
5-20	Convergence correction adjustments: (A) Primary convergence adjustments; (B) secondary convergence adjustments	5-29
5-21	Block diagram of convergence control circuitry	5-30
5-22	Convergence waveform generators output siganls	5-31
5-23	Effect of convergence delay compensation circuit on the horizontal ramp	5-31
5-24	Simplified schematic of the four quadrant multiplier IC used in the convergence waveform generators; U217, U414, U125, U235, U427, U637 and U150	5-32
5-25	Example of signal processing in the convergence waveforms processor	5-33
5-26	Equivalent circuits for red convergence output amplifier	5-34
5-27	Equivalent circuits for red convergence ouput amplifier: (A) Inverting half of amplifier; (B) non-inverting half of amplifier	5-37
5-28	Simplified schematic of the high voltage supply resonant flyback circuit	5-38
5-29	Simplified schematic of the phase lock circuit	5-39
5-30	Simplified schematic of B+ supply regulator circuit	5-40
5-31	Simplified schematic of screen grid (G2) supply circuit (parallel charge multiplier)	5-42
5-32	Simplified schematic of inverter circuit and waveforms of current and voltage in the circuit	5-45
6-1	Construction details for the Signal Adder	6-4
6-2	Construction details for 2.5X attenuator	6-5
6-3	Initial equipment setup conditions for step 1	6-7
6-4	Equipment setup conditions for step 3	6-9
6-5	Initial setup conditions for step 7	6-11
6-6	Measuring peak-to-peak jitter. Shaded area indicates illuminated phosphor	6-12

LIST OF ILLUSTRATIONS (cont)

Fig. No.		Page
6-7	Equipment setup conditions for checking vertical positioning range	6-13
6-8	Equipment setup conditions for checking vertical scan start jitter	6-14
6-9	Measuring vertical scan start jitter	6-15
6-10	Equipment setup conditions for checking the reference input signal	6-16
6-11	Checking the reference input signal dc levels	6-16
6-12	Measuring vertical retrace blanking time at TP337 (Red) on A12	6-16
6-13	Measuring horizontal retrace blanking pulse width at TP609 on A13A1	6-17
6-14	Measuring triggered horizontal timing	6-17
6-15	Checking the video amplifier pulse response	6-18
6-16	Checking field-time distortion	6-19
6-17	Checking low-frequency non-linear distortion	6-20
6-18	Checking contrast tracking. Green and blue video waveforms are overlaying the red video waveform	6-21
6-19	Equipment setup conditions for checking signal-to-noise ratio	6-22
6-20	Measuring low and high frequency noise amplitude at TP337 on A12	6-23
6-21	Checking channel-to-channel isolation	6-24
6-22	Equipment setup conditions for checking differential gain	6-25
6-23	Checking differential gain of the video amplifier red channel	6-26
6-24	Equipment setup conditions for checking 690SR input voltage range	6-27
6-25	Equipment setup conditions for checking the anode supply voltage	6-29
7-1	Initial setup described in Preliminary Steps	7-10
7-2	Equipment setup conditions for adjusting the high voltage supply	7-12
7-3	Equipment setup conditions for adjusting overload threshold	7-12
7-4	Equipment setup conditions for adjusting horizontal retrace delay	7-13
7-5	Adjusting R436 on A11A2 for proper horizontal delay	7-14
7-6	Typical dual-trace waveforms obtained when adjusting R640 on A10A1	7-15
7-7	Equipment setup conditions for adjusting convergence crossover distortion	7-16
7-8	Typical dual-trace waveforms obtained when adjusting for minimum crossover distortion	7-17
7-9	Typical waveforms obtained when performing step 9	7-19
7-10	Proper amplitude vertical ramp at TP675 on A8A1. The Vertical Position control (R820) sets the dc level	7-19
7-11	Convergence control layout and control function. These controls are located on the Convergence Control board A8A1 in the front drawer	7-21
7-12	Location of crt yoke clamp, purity tabs and static convergence adjustments	7-22
7-13	Proper active-time horizontal ramp waveforms	7-22
7-14	Typical waveforms obtained when performing step 13	7-23
7-15	Typical waveforms obtained at TP635 on A8A2 when performing step 14	7-24
7-16	Typical waveforms obtained at TP434 on A8A2 when performing step 15	7-25
7-17	Equipment setup conditions for adjusting the convergence waveforms	7-26
7-18	Typical vertical parabola waveforms	7-27
7-19	Proper vertical 'S' waveform at TP235 on A8A2	7-28
7-20	Proper vertical 'B' waveform at TP137 on A8A2	7-28
7-21	Typical waveforms obtained at TP161 on A8A2	7-29
7-22	Centering the convergence crosshatch pattern and adjusting for optimum horizontal linearity	7-30
7-23	Proper H and V focus waveform amplitudes at TP851 on A9A1	7-33
7-24	Equipment setup conditions for performing the Z-axis adjustments	7-34
7-25	Matching the video black level to the black level sample interval at TP352 on A13A1	7-35
7-26	Proper video amplitude at TP279 (Green) on A13A1	7-35
7-27	Proper output video amplitude at TP437 on A12	7-36
7-28	Proper red screen dc level at TP337 on A12	7-37
8-1	Using the foldout pages	8-1
8-2	Multi-pin circuit board connector	8-2
8-3	Schematic and parts list for minimum load unit	8-4

LIST OF ILLUSTRATIONS (cont)

Fig. No.		Page
8-4	Setup for troubleshooting the Low Volts Power Supply	8-4
8-5	Low Volts Power Supply shown with the protective covers removed and the lower switch plate mounted to the heat sink. All components are now accessible for troubleshooting	8-9
8-6	Current waveform at L390	8-9
8-7	Correct waveform at "T" on Inverter board when the start network is functional	8-10
9-1	Location of modular assemblies mounting screws	9-5
9-2	Exploded view of 690SR modular assemblies	9-6
9-3	Power Supply A7 shown removed from mainframe	9-8
9-4	Wire connections to the power supply input board, A7A1A1	9-9
9-5	CRT neck compartment connectors and securing components	9-15
9-6	Orientation of crt neck components. Note placement of the deflecton yoke (in full forward position for calibration) and alignment of components to the anode button	9-16
9-7	CRT replacement adjustment locations	9-17
9-8	Points of interest: Top View	9-18
9-9	Equipment setup for the Horizontal Deflection board precalibration procedure	9-20
9-10	Waveform at TP332. Waveform should remain stable at 15.75 kHz (decoder plugged into mainframe) and at 13 kHz (decoder unplugged from mainframe)	9-20
9-11	Waveform at TP740. Pulse duration at high state is 18.4 μs $\pm$0.5 μs	9-20
9-12	Waveform at TP134 is variable from 8-20 V p-p	9-21
9-13	Equipment setup conditions for measuring yoke current	9-21
9-14	Comparison of yoke current and voltage representation at TP510. Waveforms should be within $\pm$5% of each other	9-22
9-15	Examples of unstable waveforms when flyback protect circuit is enabled due to excessive yoke current	9-22
9-16	Manual beam current fixture	9-23
10-1	Location of information tags	10-2
12-1 thru 12-7	Service Illustrations	See Sec. 12

LIST OF TABLES

Table No.		Page
3-1	Electrical Characteristics—Display	3-1
3-2	Electrical Characteristics—Video	3-4
3-3	Electrical Characteristics—Timing & Deflection	3-5
3-4	Electrical Characteristics—Low Voltage Power Supply	3-6
3-5	Electrical Characteristics—High Voltage Supply	3-6
3-6	Environmental Characteristics	3-7
3-7	Physcial Characteristics	3-7
3-8	CRT Options	3-9
4-1	Factory-Set Jumper Positions	4-4
5-1	Resistance Selection Through Analog Switch U830	5-24
5-2	Functions Available to Interface Module Control Board Via Square Pins	5-35
6-1	Recommended Test Equipment	6-1
6-2	690SR Video Input Signal Levels	6-6
6-3	LV Power Supply	6-27
7-1	Recommended Test Equipment	7-1
7-2	690SR Video Input Signal Levels	7-3
7-3	Check LV Power Supply	7-11
7-4	Adjusting Convergence Crossover Distortion	7-16
7-5	Photometer Readings	7-38
8-1	Colors for Wire Idenfication by Function	8-3
8-2	Circuit Board Service Position	8-5
9-1	Relative Susceptibility to Static Discharge Damage	9-2
9-2	Components Most Susceptible to Static Discharge	9-3
9-3	Non-Replaceable Components	9-4
9-4	Selected Components	9-4

PART I
OPERATING INFORMATION

INTRODUCTION

This manual is divided into two parts. Part I is intended for use by operating and service personnel. The instructions describe instrument inspection and operation with protective covers installed on the instrument to protect operating personnel.

Part II is to be used by qualified service personnel only, since servicing exposes personnel to hazardous voltages when the protective covers are removed.

OPERATORS SAFETY SUMMARY

The general safety information in this part of the summary is for both operating and servicing personnel. Specific warnings and cautions will be found throughout the manual where they apply, but may not appear in this summary.

Terms In This Manual

CAUTION statements identify conditions or practices that could result in damage to the equipment or other property.

WARNING statements identify conditions or practices that could result in personal injury or loss of life.

Terms As Marked on Equipment

CAUTION indicates a personal injury hazard not immediately accessible as one reads the marking, or a hazard to property including the equipment itself.

DANGER indicates a personal injury hazard immediately accessible as one reads the marking.

Symbols In This Manual

This symbol indicates where applicable cautionary or other information is to be found.

Symbols As Marked on Equipment

DANGER — High voltage.

Protective ground (earth) terminal.

ATTENTION — refer to manual.

Power Source

Do not apply more than 250 V rms between either supply conductor and ground when the instrument is wired for 230 V mains operation. A protective ground connection by way of the grounding conductor in the power cord is essential for safe operation.

Grounding the Product

This product is grounded through the grounding conductor of the power cord. To avoid electrical shock, plug the power cord into a properly wired receptacle before connecting to the product input or output terminals. A protective ground connection by way of the grounding conductor in the power cord is essential for safe operation.

Danger Arising From Loss of Ground

Upon loss of the protective-ground connection, all accessible conductive parts (including knobs and controls that may appear to be insulating) can render an electric shock.

Use the Proper Power Cord

Use only the power cord and connector specified for your product.

Use only a power cord that is in good condition.

For detailed information on power cords and connectors, see the Accessories Tabbed Page at the rear of the instrument.

Refer cord and connector changes to qualified service personnel.

Use the Proper Fuse

To avoid fire hazard, use only the fuse of correct type, voltage rating and current rating as specified in the parts list for your product.

Refer fuse replacement to qualified service personnel.

Do Not Operate in Explosive Atmospheres

To avoid explosion, do not operate this product in an explosive atmosphere unless it has been specifically certified for such operation.

Do Not Remove Covers or Panels

To avoid personal injury, do not remove the product covers or panels. Do not operate the product without the covers and panels properly installed.

Heavy Instrument

The instrument weighs approximately 110 lbs (50 kg). To avoid personal injury, obtain assistance when lifting the instrument.

SERVICE SAFETY SUMMARY

FOR QUALIFIED SERVICE PERSONNEL ONLY

Refer also to the preceding Operators Safety Summary.

Do Not Service Alone

Do not perform internal service or adjustment of this product unless another person capable of rendering first aid and resuscitation is present.

Use Care When Servicing With Power On

Dangerous voltages exist at several points in this product. To avoid personal injury, do not touch exposed connections and components while power is on.

Disconnect power before removing protective panels, soldering, or replacing components.

Power Source

Do not apply more than 250 V rms between either supply conductor and ground when the instrument is wired for 230 V mains operation. A protective ground connection by way of the grounding conductor in the power cord is essential for safe operation.

REGULATORY AGENCY CONFORMANCE

1. The 690SR is listed under UL1244/UL478 Safety Standard for Electrical and Electronic Measuring and Test Equipment and Electronic Data Processing Units and Systems.

2. The 690SR is CSA certified per CSA Bulletin 556B.

3. The 690SR complies with European Standards IEC 348 and IEC 435.

4. The 690SR complies with FCC requirements for EMI per FCC Docket 20780, Part 15, Subpart J for Class A computing devices.

5. The 690SR complies with DHEW standards under the Radiation Control for Health and Safety Act of 1968, applicable at the date the instrument was manufactured (DHEW Title 21 CFR Subchapter J (BRH X-radiation)).

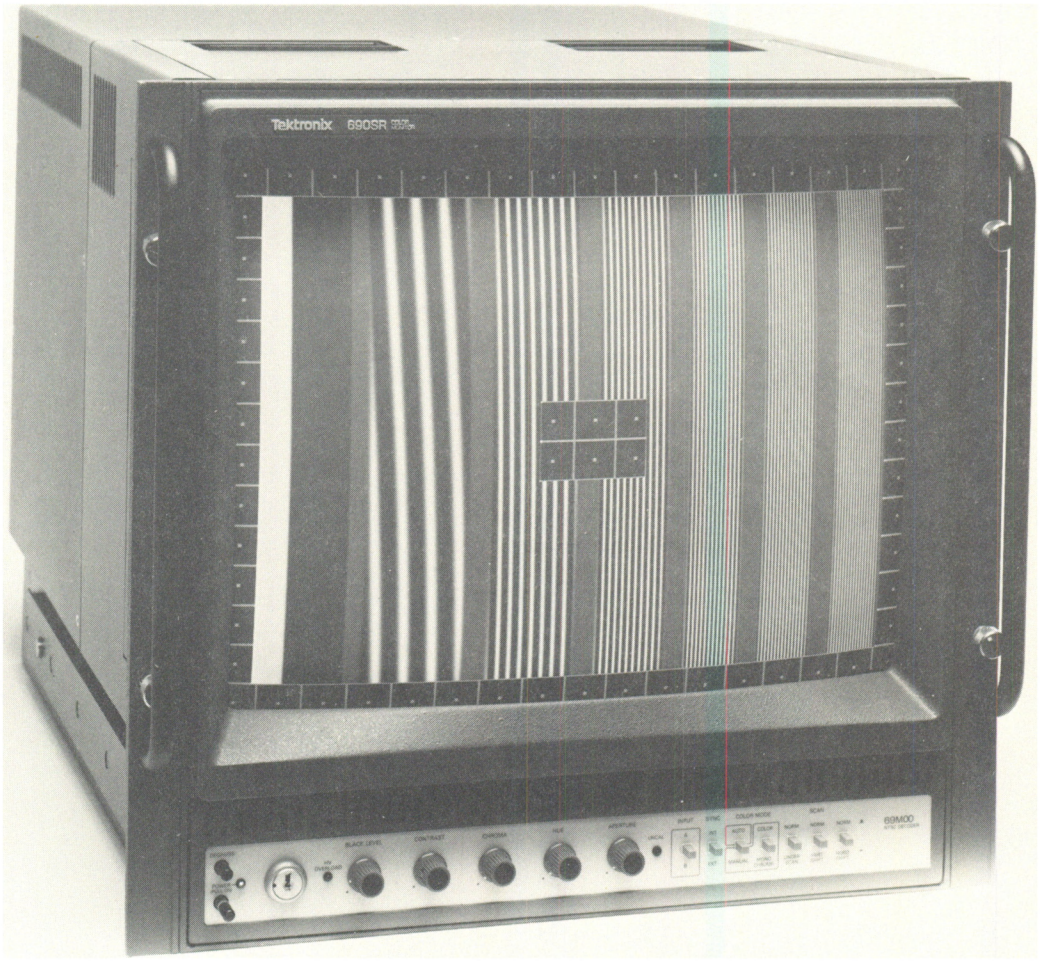

3821 00

Fig. 1-1. The TEKTRONIX 690SR Television Color Monitor. (Shown with a television decoder interface module installed.)

GENERAL INFORMATION

This section of the manual provides a description of the product. Damage inspection and repackaging information are also provided.

Product Description

The TEKTRONIX 690SR Television Color Monitor (see Fig. 1-1) is a mainframe designed for professional use in television broadcast, closed circuit, industrial, and educational fields. The mainframe utilizes a raster-scanned high-resolution 19-inch shadow mask color crt. This crt provides four times the number of phosphor dots as a standard color crt.

The 690SR mainframe has a rear compartment that accepts a separately purchasable interface module that processes the composite video signal. Only one decoder interface module can be plugged into the mainframe compartment at a time. Adjustments and front-panel controls associated with the module are located in the mainframe front drawer interface control area.

Other television interface modules are available for the 690SR mainframe. Contact your Tektronix Field Engineer to find out which interface modules are available.

CAUTION

For proper operation, operate the 690SR mainframe with an interface module installed. Set the 690SR POWER switch to OFF before installing the interface module.

The 690SR mainframe interface connector accepts red, green, and blue signals. These signals are internally terminated by 75 Ω. Horizontal and vertical triggers must also be applied to the mainframe interface connector for proper scan timing. The television interface module is designed to provide all of these signals to the monitor.

Some main features of the 690SR are:

1. Stabilized gray scale for repeatable and accurate color represention.

2. Accurate, stable convergence in all sectors of the screen. Monitor remains essentially converged and linear when raster size is varied.

3. High efficiency power supply.

4. Switches and adjustments needed for routine performance verification and setup are located in a lockable front drawer.

PHYSICAL INSPECTION

Damage Inspection

NOTE

Do not remove the instrument from its shipping pallet until it is ready for electrical installation. See Section 4, Installation.

After carefully removing the picture monitor from the shipping carton, inspect the instrument for possible damage incurred during shipment. Report any shortage or damage to the carrier.

WARNING

The 690SR mainframe weighs approximately 110 lbs (50 kg). To avoid personal injury, obtain assistance when lifting the instrument.

Accessories List

Standard accessories supplied with this instrument can be found on the last page of the Replaceable Mechanical Parts list illustrations. For additional accessories, see the current Tektronix, Inc. Television Products Catalog.

Repackaging

If this instrument is to be shipped long distances by commercial transportation, repackage the instrument in the original manner for maximum protection (see Fig. 1-2). The original shipping carton should be saved and used for this purpose.

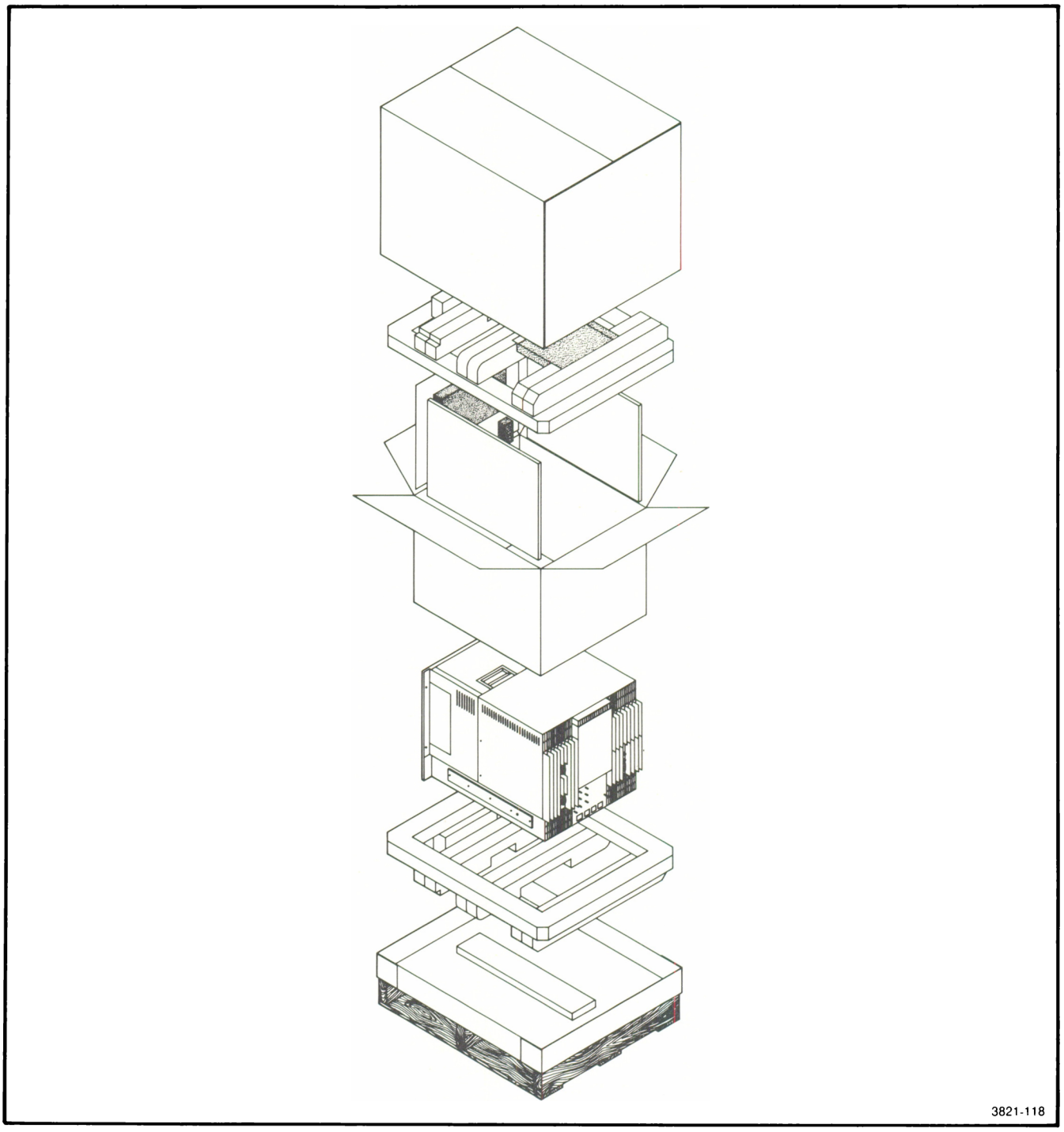

Fig. 1-2. Repackaging the instrument.

OPERATOR'S FAMILIARIZATION

This section provides information for operating the instrument. Functions of controls and lights are described. A block diagram with its associated description is also included.

Interface Module

Check that the television interface module is properly installed in the 690SR mainframe. Connect the appropriate input signal(s) to the input connector(s) of the television interface module. Refer to the television interface module instruction manual for more information.

Mains Voltage and Frequency Requirements

The 690SR can be operated from either 115 V ac nominal mains voltage within a range of 103 to 127 V ac or 230 V nominal mains voltage within a range of 207 to 250 V ac, at 47 to 63 Hz. The 690SR is factory-set for a range of 103 to 127 V ac unless ordered otherwise.

If the mains voltage range needs to be changed, refer to qualified service personnel. The qualified service person can find the necessary information in Section 4 of this manual.

Power Connections

Check that the 690SR POWER switch is set to OFF and the interface module is installed. Connect the appropriate three-wire power-supply cord to the power receptacle on the rear panel of the instrument. Plug the power cord into the mains outlet. Set the POWER switch to ON.

FRONT-PANEL CONTROLS & INDICATOR LIGHTS

The following is a brief description of the operation or function of the front-panel controls and indicator lights (see Fig. 2-1).

POWER—Push-pull knob to connect or interrupt mains power to the instrument.

POWER ON—Green LED that illuminates when power is applied to the instrument, the POWER switch is set to ON, and the power supply is not in a safety limit condition.

DEGAUSS—Push knob to operate the degauss coil for neutralizing the static magnetic field in the crt.

HV OVERLOAD/SCAN FAIL—Red LED that blinks due to overload on the anode supply. (Performance specifications are not guaranteed in this mode.) The blink rate is proportional to the amount of anode current. The LED remains on continuously if either the horizontal or vertical scan fail signal becomes activated.

Note

The LED may blink under some full amplitude signal conditions if the White Pedestal switch is set to On.

BLACK LEVEL—Variable control that compensates for room lighting by adjusting the displayed low lights and allows use of a black background for alpha numerics. The PRESET (detent switch) level is fixed by an internal (drawer) adjustment.

CONTRAST—Variable control that adjusts picture contrast by adjusting the displayed high lights. Normalizes input signals from 2 times to 0.5 times that of the reference input signal[1] to restore nominal brightness. The PRESET level is fixed by an internal (drawer) adjustment.

FRONT DRAWER SWITCHES, INDICATOR LIGHT & ADJUSTMENTS

(See Fig. 2-2)

CAUTION

The front drawer is lockable to prevent unauthorized personnel from changing the settings of switches, controls, and adjustments. Any changes must be made by a qualified service person only because of the potential affects to overall calibration.

Screens

On-Off—Three slide switches, one for each beam, for switching the appropriate beam on or off.

[1]**Reference input signal: DC-coupled, 0 V low light (black), +0.7 V high light (white), RGB input signals from the interface module.**

White Balance—Three adjustments, one for each beam, for adjusting high-light color balance.

Black Balance—Three adjustments, one for each beam, for adjusting low-light color balance.

Preset Black Level—An internal adjustment for presetting the displayed low lights.

Preset Contrast Level—An internal adjustment for presetting the displayed high lights.

Position—Two adjustments for altering the display position. One adjustment moves the display vertically; the other moves the display horizontally.

Size—Two adjustments; one for changing the height and the other for changing the width of the raster.

White Pedestal—Two-position slide switch: Normal and On. The On position increases the brightness of the display so that the black and blanking levels are visible, showing the limits of the scanned raster. Also, the White Pedestal light turns on.

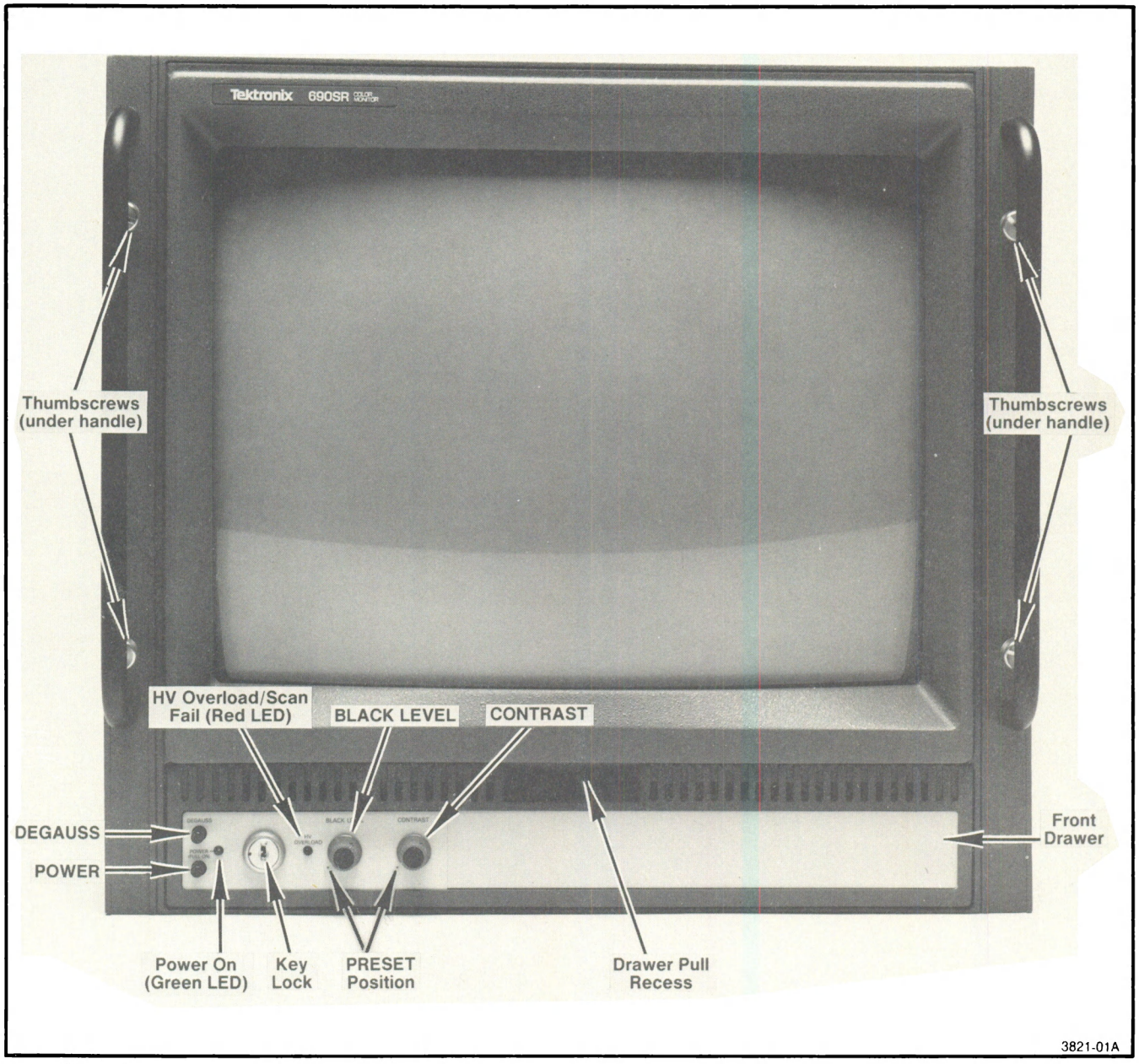

Fig. 2-1. Front view of 690SR mainframe. The thumbscrews under the handles hold the instrument securely in a rack.

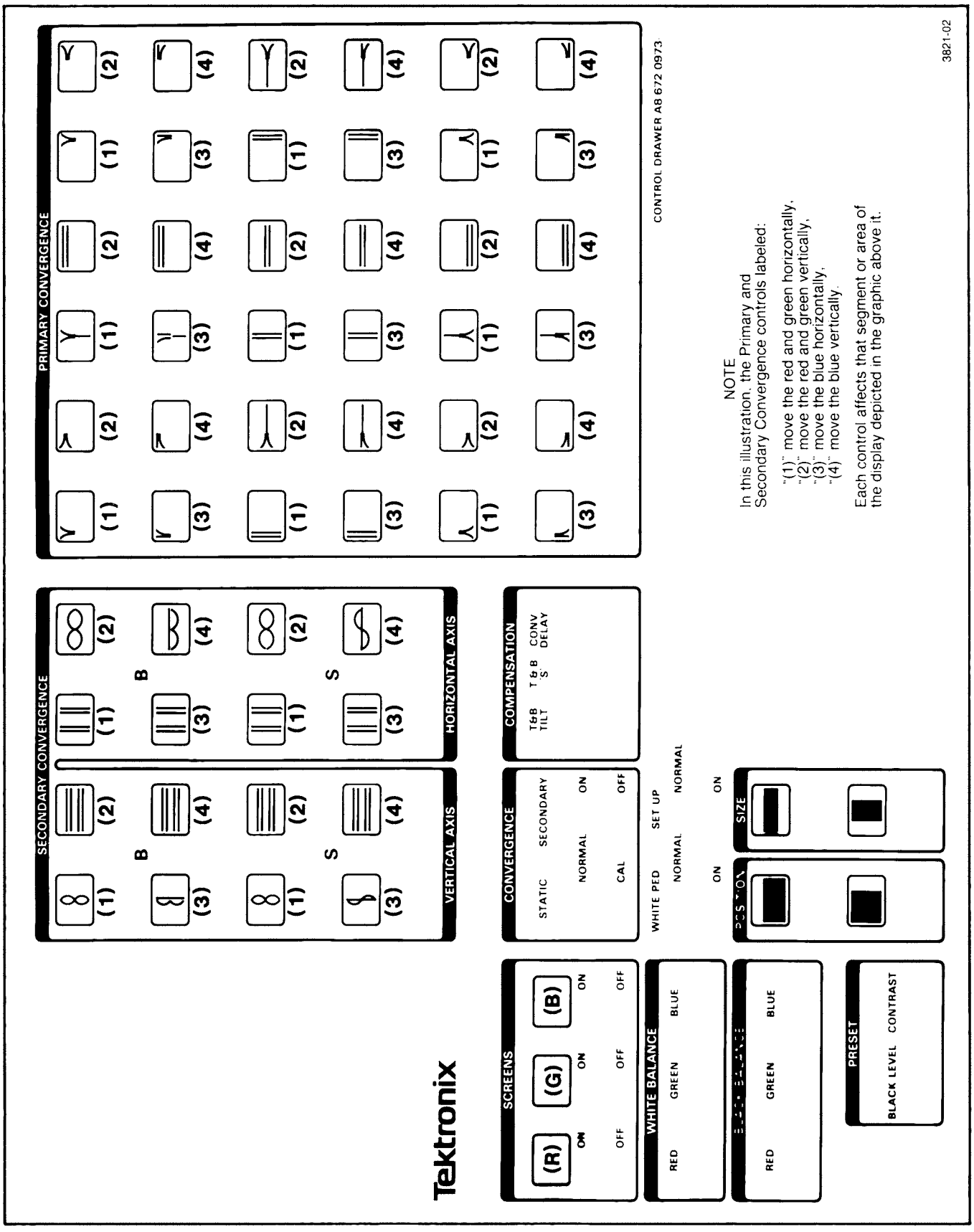

Fig. 2-2. Top view inside of front drawer.

White Pedestal Light—A yellow LED, located next to the White Pedestal switch, illuminates when this switch is set to On.

Set Up—Two-position slide switch for selecting vertical scan: Normal and On. When the switch is set to On, vertical scan is reduced to 10% of full height to aid in adjusting low-light color balance.

T&B Tilt—An adjustment for correcting top and bottom tilt, if necessary.

T&B 'S'—An adjustment for correcting top and bottom 'S', if necessary.

Convergence Delay Compensation—An adjustment for correcting delay distortion in the convergence system, if necessary.

Static Convergence—Two-position slide switch: Normal and Calibrate. When the switch is set to Calibrate, the convergence waveforms are ac-coupled so the static magnets can be adjusted. This position allows the qualified service technician to adjust convergence for minimum power consumption. When the switch is set to Normal, the convergence waveforms are dc coupled.

Secondary Convergence—Two-position slide switch: On and Off. When the switch is set to Off, the secondary convergence waveforms are completely disconnected from the convergence system. This switch position aids in the adjustment of the Primary Convergence controls.

Primary Convergence—Nine groups of adjustments[2] consisting of four controls in each group for a total of 36 adjustments.

Secondary Convergence-Horizontal Axis—Two groups of adjustments[2] consisting of four controls in each group. These controls provide horizontal 'S' and 'B' correction.

Secondary Convergence-Vertical Axis—Two groups of adjustments[2] consisting of four controls in each group. These controls provide vertical 'S' and 'B' correction.

[2]As shown in Fig. 2-2, an illustration is provided above each adjustment in the front drawer to show the segment or area of the display affected by the control.

Each of the four controls in the Primary Convergence and Secondary Convergence control groupings shown in Fig. 2-2 adjusts segments of the display with beam movements as follows:

"(1)" moves the red and green horizontally.

"(2)" moves the red and green vertically.

"(3)" moves the blue horizontally.

"(4)" moves the blue vertically.

CONVERGENCE TOUCH-UP (For Authorized Personnel Only)

The following procedure describes how to touch-up the convergence.

1. Display a convergence crosshatch pattern.

2. Depress the DEGAUSS push button for at least 5 seconds.

3. Check that the H Size (R925) and Vert Size (R825) controls on the Convergence Control board A8A1 are set fully clockwise. Refer to Fig. 2-2 for the location of the front drawer controls.

4. Set Secondary Convergence switch S626 to Off. Check that the Static Convergence switch, S620, is set to Normal.

5. Adjust the Primary Convergence controls on A8A1 by following the numbered sequence illustrated in Fig. 7-11 of Section 7.

NOTE

Referring to Fig. 7-11, use group "1" controls to converge the exact center of the screen.

Use group "2" controls to converge the extreme edges of the screen in these areas: extreme top-center and bottom-center edges; extreme left-center and right-center edges.

Use group "3" controls to converge the extreme corners of the display.

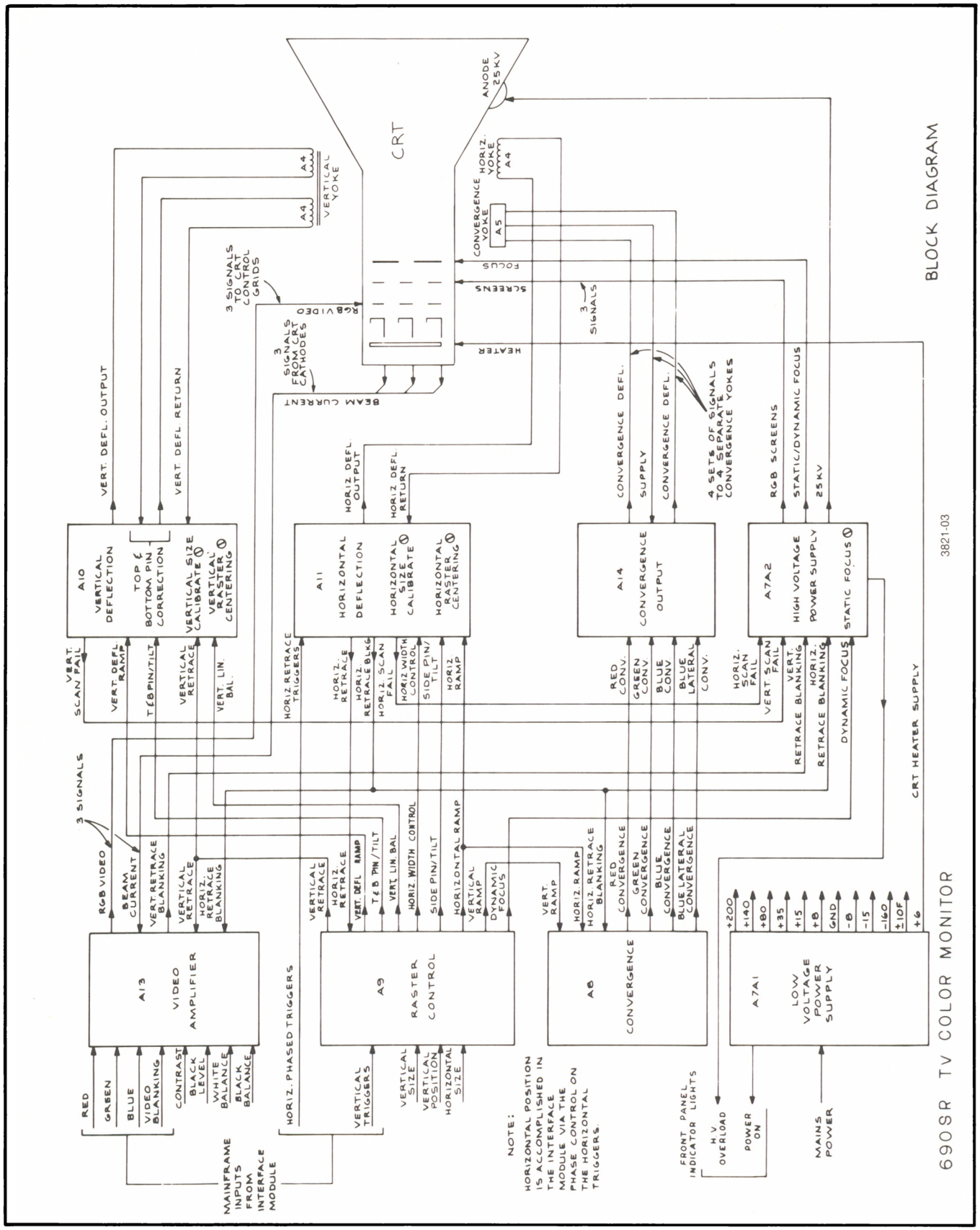

Fig. 2-3. Block Diagram.

6. Set Secondary Convergence switch S626 to On.

7. Adjust the Secondary Convergence controls on A8A1 for optimum convergence along the vertical and horizontal axes. That is, referring to Fig. 7-11, use group "4" controls to reduce the major errors first. Then, use these same controls to converge the vertical-center and horizontal-center crosshatch lines in the areas located one-fourth of the way from the edge of the screen. Also, be sure to converge the crosshatch lines that intersect the lines along the axes in these same areas. Use the small illustrations adjacent to the convergence control as an aid when selecting the controls that need to be adjusted.

8. Repeat step 5 and, if necessary, slightly readjust the Secondary Convergence controls to optimize distribution of convergence errors.

BLOCK DIAGRAM DESCRIPTION

Introduction

This portion of the manual contains a block diagram (see Fig. 2-3) and an associated description. It is meant to introduce the reader to the major functional blocks that make up the whole system. If more specific information is needed, refer to Section 5, Theory of Operation.

Video Amplifier A13

The purpose of the Video Amplifier block is to provide amplification of the red, green, and blue video signals.

The red, green, and blue signals come from the interface module via 75-Ω coaxial cables and are applied to the video amplifier where they are amplified before being applied to the control grid of the crt.

The video amplifier consists of three identical channels driven by single front-panel black level and gain controls labeled BLACK LEVEL and CONTRAST, respectively, as indicated on the left side of the Video Amplifier block. Also, each amplifier has White Balance and Black Balance adjustments for colorimetry control.

At the right side of the Vertical Amplifier block there are three input signals: Beam current sample, vertical retrace, and horizontal blanking.

The horizontal retrace blanking signal is used in the gain and level circuits. This signal triggers one-shot timing circuits that control sample-and-hold circuits. The sample-and-hold circuits change the gain and level of the amplifiers to match the levels set remotely by the BLACK LEVEL, CONTRAST, Black Balance, and White Balance controls. The horizontal retrace blanking signal also blanks the video applied to the crt during horizontal retrace time.

The vertical retrace signal provides crt blanking during the vertical retrace interval. The trailing edge of the signal triggers a one-shot that controls the beam current sample circuit. The beam current sample-and-hold circuit compares the beam current signal from each cathode with a preset level to provide control of the crt control grid dc level. Beam current control stabilizes the black level of the display for variations associated with changes in the crt. The beams are blanked (for video) during the stabilization cycle; therefore, total blanking is longer than actual retrace time.

Raster Control A9

The main function of the Raster Control block is to convert the incoming horizontal and vertical timing information as well as the horizontal and vertical size information into signals that represent linear displacement across the face of the crt. These signals, which represent position across the face of the crt, become time invariant; thus, the monitor is capable of operating over a wide range of vertical and horizontal rates.

The conversion from time to position across the face of the crt is accomplished via horizontal and vertical constant amplitude ramp generators. In the Raster Control block these ramps are also applied to horizontal and vertical rate geometry correction IC's as well as four quadrant multiplier IC's. The voltage output from these IC's represents the deflection currents (and the pin cushion correction currents) needed in the deflection yoke to produce a linear display. The geometry IC's also provide the horizontal and vertical rate dynamic focus waveforms.

Vertical Deflection A10

This block consists of three major circuits:

1. A linear voltage-to-current amplifier that converts the vertical deflection ramp into vertical deflection current.

2. Another voltage-to-current amplifier that converts the top and bottom pin cushion signal and the top and bottom tilt signal into a current signal. This signal is transformer coupled into the center of the vertical deflection yoke windings.

3. A vertical scan fail circuit that senses failure of vertical scan in order to protect the crt.

The vertical scan fail circuit has two modes. One mode is normal operation. If the deflection decreases to approximately one-half of its normal peak-to-peak magnitude, the vertical scan fail circuit is activated. The other mode is setup, when vertical scan is intentionally reduced to 10% of full height to aid in adjusting low-light color balance. In the setup mode, the sensitivity of the vertical scan circuit is increased to allow vertical scan to continue.

As noted in the Vertical Deflection block, there are two screwdriver adjustments shown: Vertical Size Calibrate and Vertical Raster Centering. These calibration adjustments are essential for normalizing the Vertical Deflection block to the vertical deflection yoke and the crt.

Horizontal Deflection A11

The Horizontal Deflection block consists of a resonant scan deflection circuit that uses bipolar switching transistors. The peak-to-peak current in the yoke is controlled via a closed-loop B+ control circuit that forces the sampled peak current in the yoke to correspond to the horizontal width control signal from the Raster Control block.

To allow the resonant scan deflection circuit to be calibrated at different horizontal frequencies, four internal jumpers are used. These jumpers alter the horizontal linearity ramp, the linearity 'S' capacitors, and the B+ closed-loop compensation.

Other circuits in the Horizontal Deflection block are as follows:

1. A scan fail circuit that shuts down the high voltage in case of horizontal scan failure.

2. A flyback voltage limit circuit that protects the deflection transistor during turn-on transients or horizontal drive disturbances.

3. A time-delay stabilizing circuit that maintains constant intervals between the incoming horizontal phased triggers and the outgoing horizontal retrace blanking signal.

Shown within the Horizontal Deflection block are two calibration adjustments: Horizontal Size Calibration and Horizontal Raster Centering. The Horizontal Size Calibration adjustment normalizes the combination of the resonant scan circuit and the horizontal deflection yoke so the picture can be adjusted to full size. The Horizontal Raster Centering adjustment horizontally positions the raster to compensate for various purity settings and horizontal deflection yokes.

Convergence A8

The horizontal and vertical ramps from the Raster Control block are applied to the Convergence block for use as beam position information. This information is used to generate both the primary and secondary correction signals.

The primary correction signals are parabolas that are chopped to allow independent control of right and left, and top and bottom. The corner correction signals are generated as the product of the horizontal rate and vertical rate parabolas, then chopped, allowing control of each corner individually.

The secondary correction signals are generated to add X^3, X^4, Y^3, and Y^4 components to the composite correction signal without affecting the primary corrections.

All correction signals are applied to a control matrix to form the composite correction signals for red, green, blue, and blue lateral.

Convergence Output A14

The Convergence Output accepts the four composite correction signals (red, green, blue, and blue lateral) as voltage waveforms and drives current through the appropriate convergence yoke coils. The convergence output consists of four linear voltage-to-current converters.

High Voltage Power Supply A7A2

The High Voltage Power Supply circuit provides a regulated anode potential with output ripple synchronized to the horizontal frequency. The anode supply is current limited and over-voltage protected. The regulation circuitry is a highly efficient switching type. The dc (static) focus output is adjustable independent of the anode voltage.

Low Voltage Power Supply A7A1

The Low Voltage Power Supply provides the operating power for the mainframe and interface module.

The low voltage power supply is a switch-mode power supply operating at approximately 25 kHz. The supply uses the Tektronix 155-0067-02 regulator IC and a series LC circuit between the chopper transistors and the output transformer. The outputs of the supply are thus pre-regulated; series-pass regulation where necessary is accomplished in the individual assemblies.

The supplies provided are: +200 V, +140 V, +80 V, +35 V, +15 V, +8 V, gnd, −8 V, −15 V, −160 V, +10 V

floating and −10 V floating with a common connection, and +6 V floating for the crt heater. The supplies are filtered to minimize ripple. Mains power connections are provided for the ac degauss coil.

The regulator is designed to limit the total power drawn from the supply. One output is voltage regulated and the other output levels are determined by the transformer turns ratios. The supply is also designed to shut down if certain of these ratios are invalid (for example: if two of the protected supplies are shorted together).

SPECIFICATION

Performance Conditions

The electrical characteristics in this specification are valid only within the environmental limits stated in Table 3-6 of this section. Performance verification checks in Section 6 are based on the instrument having been adjusted in an ambient temperature between +20°C and +30°C and allowed at least 45 minutes of warm-up time. Any conditions unique to a particular characteristic are expressly stated as a part of that characteristic.

Specification Classifications

Items listed as Performance Requirements in the Electrical Characteristics tables are supported with performance check steps in Section 6. Some Performance Requirement items may not be checked because they are very stable by their nature, such as the Mains Frequency Range. Others may require an exhaustive procedure and test equipment not commonly available in order to perform the check, such as the Vertical Scan Rate Range.

Items listed as Supplemental Information are not verified with performance check steps. They are provided as explanatory characteristics and often are stated without tolerance or limits.

The Perf. Ck. Step No. column lists the specific step number of the Performance Check procedure in Section 6 for appropriate Performance Requirement items.

Table 3-1
ELECTRICAL CHARACTERISTICS—DISPLAY

Characteristic	Performance Requirement	Supplemental Information	Perf. Ck. Step No.
Crt Description[a]		Standard phosphor, high resolution crt	
Type		19 V[b] diagonal, delta gun, dot mask, spherical face	
Dot Pitch		0.31 mm triad	
Usable Height and Width		11.0 inches (27.9 cm) high, 14.7 inches (37.3 cm) wide	
Aspect Ratio	4:3		1
Colorimetry		R G B X 0.610 0.280 0.152 Y 0.340 0.590 0.063 Tolerance is ±0.02	
Decay to 10% of Excited Output		500 μs, Red	
		30 μs, Green	
		20 μs, Blue	
CRT-Limited Resolution (Standard crt only)		1000 TV lines (1333 lines total horizontal resolution) within a circle bounded by picture height at 30 fL peak white, −80 V grid cutoff, and 3% depth of modulation. (Resolution obtainable at a given screen brightness is affected by the setting of the grid bias voltage)	

[a] For other crt's, refer to Table 3-8

[b] V (defined as viewable inches)

Table 3-1 (cont)

Characteristic	Performance Requirement	Supplemental Information	Perf. Ck. Step No.
Geometric Distortion	Points inside a control circle will be within 0.11 inch (0.279 cm) (±1% of screen height) of their proper position; points outside the circle will be within 0.17 inch (0.42 cm) (±1.5% of screen height) of their proper position		1
Incremental Linearity	A test vector of nominal length between 0.75 to 1.1 inch (1.91 to 2.79 cm) will be displayed anywhere on the screen at its nominal length, ±7%.		1
Orthogonality	90°, within 1°		2
Convergence	Maximum misconvergence 0.5 mm when measured from the center of one displayed signal to the center of the same signal displayed in another color		2
White Colorimetry	Factory adjusted to illuminant D 6500° (adjustable to other standards)		5
Black Level Stability		Maintains black level stability of each beam with 0.01 $\mu W/cm^2$ under reference conditions; the beam is on and sampled at the top of the display area	
Contrast (With Reference Input Signal at high light and −80 V grid cutoff)		Reference Input Signal: 0 V low light (black); +0.7 V high light (white)	
Control Range	6 to 62 fL	62 fL obtainable with a new crt only	3
Preset Range	10 to 50 fL	Factory preset at 30 fL	3
Black Level (Brightness) (With Reference Input Signal at low light and −80 V grid cutoff)			
Control Range	From below cutoff to 1.5 fL		4
Preset Range	From below cutoff to 1.5 fL.		4
TV Picture Size Control Range for NTSC Only (PAL and SECAM similar)			
Horizontal		105% to 68%	
Vertical		105% to 68%	
Underscan		Effected by the Interface Module	

Table 3-1 (cont)

Characteristic	Performance Requirement	Supplemental Information	Perf. Ck. Step No.
Raster Size Change Due to Changes in Anode Current (light output)			
0 to 0.64 mA	Less than 1% of screen height	Equivalent to a nominal light output of 40 fL (at 0.64 mA)	
0 to 1.0 mA	Less than 2% of screen height	Equivalent to a nominal light output of 62 fL (at 1.0 mA)	6
Raster Size Change Due to Changes in Ambient Temperature 0° to 50°		Less than 2% of screen height	
Display Positioning			
Horizontal		Controlled by changing sync delay in Interface Module	
Vertical	±0.66 inch (1.68 cm) (±6% of screen height)		9
Focus		Internal static and dynamic focus controls provided	
Jitter (Peak to Peak)			
Horizontal	Less than 0.0074 inch (0.19 mm) (0.05% of screen width)		8
Interlace	Less than 0.0033 inch (0.084 mm) (0.03% of screen height) of position indicated by the interlace format		8
Vertical Scan Start	Less than 400 ns with respect to the vertical trigger edge		10
Mains Frequency Interference	Not discernible		7
X-Ray Characteristics	Complies with DHEW standards under Radiation Control for Health and Safety Act of 1968, applicable at date instrument was manufactured		

Table 3-2
ELECTRICAL CHARACTERISTICS—VIDEO

Characteristics	Performance Requirements	Supplemental Information	Perf. Ck. Step No.
Reference Input Signal (R, G, and B Inputs)	Dc coupled; 0 V low light (black); +0.7 V high light (white)		11
TV Pulse Response	Limited by Interface Module		15
Signal-to-Noise Ratio	Greater than 300:1 when measured at the input (G1) of the crt, using an oscilloscope		20
Channel-to-Channel Isolation	Greater than 20 dB at 25 MHz		21
Field Time Distortion	Less than ±2% tilt and ±2% aberrations of output pulse		16
Line Time Distortion	Less than ±2% tilt and ±3% aberrations of output pulse		17
Low Frequency Non-Linear Distortion	Within ±2%		18
Differential Gain	At the reference contrast preset setting, less than 5% at 10 MHz		22
Contrast Tracking, Channel to Channel	Less than 1% difference in gain ratio for changes in contrast settings	For settings within the dynamic range of all the amplifiers	19
Black Level Tracking, Channel to Channel	Less than 2% change of reference input signal between any two normalized video channels		19
White Pedestal		Black level raised to approximately 50% of the Reference Input Signal at nominal contrast	

Table 3-3
ELECTRICAL CHARACTERISTICS—TIMING & DEFLECTION

Characteristics	Performance Requirements	Supplemental Information	Perf. Ck. Step No.
TV Scan Rate Ranges			
Horizontal	Can be calibrated to any rate between 15 kHz to 17 kHz with less than 6.75 μs retrace time		
Vertical	45 Hz to 65 Hz with less than 0.6 ms retrace time	Automatically follows the incoming vertical rate; no unique calibration required	
Vertical Retrace Blanking	Less than 600 μs retrace time		12
Horizontal Retrace Blanking	Less than 6.75 μs retrace time		13
Triggered Horizontal Timing	Horizontal retrace blanking begins 13 μs, ±400 ns, after the rising edge of H-phased trigger at pin K of the interface compartment connector		14
Triggered Vertical Timing		Vertical retrace blanking begins at the rising edge of the vertical trigger at pin L of the interface compartment connector	
Setup Scan		Vertical scan is reduced to approximately 10% of full height to aid in adjusting low-light color balance.	
Raster Centering (Vertical & Horizontal)		Adjustments provided to compensate for positioning effects of dc magnetic fields, purity adjustment, and/or gun alignment (do not use for picture position offsets caused by timing)	

Table 3-4
ELECTRICAL CHARACTERISTICS—LOW VOLTAGE POWER SUPPLY

Characteristics	Performance Requirements			Supplemental Information	Perf. Ck. Step No.
Mains Frequency	48 to 66 Hz				
Input Voltage Range	103 to 127 Vac or 207 to 250 Vac			Changeable via internal jumpers	23
Maximum Operating Range	Nominal Line Volts		Output	Measured at input to line cord	24
	115 Vac	230 Vac	Load		
Minimum Peak-to-Peak Volts	269 V p-p	538 V p-p	280 W		
Maximum Peak-to-Peak Volts	358 V p-p	707 V p-p	90 W		
CRT Heater Supply	5.9 to 6.3 Vdc, floating				25

Table 3-5
ELECTRICAL CHARACTERISTICS—HIGH VOLTAGE SUPPLY

Characteristics	Performance Requirements	Supplemental Information	Perf. Ck. Step No.
Anode Supply Voltage	25 kV, ±1 kV	These voltages are calculated by voltage measurements at the junction of the thick film and High Voltage adjustment, R452	26
Anode Voltage Limit	28 kV, ±1 kV, as calculated by thick film resistor ratios and low voltage measurements; also determined by raster size		
Anode Current Limit		1.3 mA maximum	
Scan Failure Protection		Either vertical or horizontal scan failure will switch off the high voltage supply	
X-Ray Characteristics	Complies with DHEW standards under Radiation Control for Health and Safety Act of 1968, applicable at date of manufacture		

Table 3-6
ENVIRONMENTAL CHARACTERISTICS

Characteristics	Performance Requirement	Supplemental Information
Temperature		
Operating	0°C to +50°C	Forced-air cooling is needed at extremes of temperature and altitude
Non-operating	−55°C to +75°C	
Relative Humidity		
Operating	To 90% at +30°C (derate relative humidity by 0.75% for each degree above +30°C)	Do not operate with visible moisture on circuit boards; allow adequate dry-time before turning instrument on
Non-operating	To 90% at +60°C	
Altitude		
Operating	To 15,000 feet (4.5 km)	
Non-operating	To 50,000 feet (15 km)	
Vibration		To 0.010 inch peak-to-peak displacement over a 10 to 40 Hz frequency scan range
Shock (All axes)		Two shocks as 20 G, 1/2 sine, 11 ms duration along each major axis (12 shocks total)
Electromagnetic Compatibility	Meets FCC Rules, Part 15, Subpart J, Class A	

Table 3-7
PHYSICAL CHARACTERISTICS

Characteristics	Description
Dimensions (Overall)	(See Fig. 4-4, Installation Section.)
Height	17.460 inches (44.348 cm)
Width	19.000 inches (48.460 cm)
Length	22.812 inches (57.942 cm)
Weights	
Net Weight	Approximately 110 lbs. (49.895 kg)
Domestic Shipping Weight	Approximately 160 lbs. (72.575 kg)
Rackmount Information	Rear surface of monitor 22 inches behind rack mounting surface

Table 3-8
CRT OPTIONS

Characteristic	Performance Requirement	Supplemental Information	Perf. Ck. Step No.
Option 25 (Controlled Phosphor, Medium Resolution Crt)			
Dot Pitch		0.43 mm triad	
Colorimetry		<table><tr><th></th><th>R</th><th>G</th><th>B</th></tr><tr><td>X</td><td>0.630</td><td>0.310</td><td>0.155</td></tr><tr><td>Y</td><td>0.340</td><td>0.595</td><td>0.070</td></tr></table> Tolerance is ±0.005	
Decay to 10% of Excited Output		500 μs, Red	
		30 μs, Green	
		20 μs, Blue	
Crt-Limited Resolution		726 TV lines (968 lines total horizontal resolution) within a circle bounded by picture height, at 30 fL peak white, −80 V grid cutoff, and 3% depth of modulation. (Resolution obtainable at a given screen brightness is affected by the setting of the grid bias voltage)	
White Colorimetry	Adjustable to CIE Illuminant D; approximately 6500°K (also adjustable to other standards)		5
Contrast (with the Reference Input Signal at High Light and the Crt at −80 V Grid Cutoff)		Reference Input Signal: 0 V low light (black); +0.7 V high light (white)	
Control Range	6 to 62 fL	62 fL obtainable with a new crt only	3
Preset Range	10 to 50 fL	Factory preset at 30 fL	3
Black Level (Brightness (with the Reference Input Signal at Low Light and the Crt at −80 V Grid Cutoff))		Reference Input Signal: 0 V low light (black); +0.7 V high light (white)	
Control Range	From below cutoff to 1.5 fL		4
Preset Range	From below cutoff to 1.5 fL		4
Raster Size Change (Due to Changes in Anode Current (Light Output))			
0 to 0.64 mA	Less than 1% of screen height	Equivalent to a nominal light output of 46 fL	
0 to 1.0 mA	Less than 2% of screen height	Equivalent to a nominal light output of 72 fL	6

Table 3-8 (cont)

Characteristic	Performance Requirement	Supplemental Information	Perf. Ck. Step No.
Option 27 (EBU Phosphors, Medium Resolution Crt)			
Dot Pitch		0.43 mm triad	
Colorimetry		R G B X 0.640 0.290 0.150 Y 0.330 0.600 0.060 Tolerance is ±0.005.	
Decay to 10% of Excited output		500 μs, Red	
		30 μs, Green	
		20 μs, Blue	
Crt-Limited Resolution		670 TV lines (893 lines total horizontal resolution) within a circle bounded by picture height, at 30 fL peak white, −80 V grid cutoff, and 3% depth of modulation. (Resolution obtainable at a given screen brightness is affected by the setting of the grid bias voltage)	
White Colorimetry	Adjustable to CIE Illuminant D; approximately 6500°K (also adjustable to other standards)		5
Contrast (with the Reference Input Signal at Low Light and the Crt at −80 V Grid Cutoff)		Reference Input Signal: 0 V low light (black); +0.7 V high light (white)	
Control Range	5 to 55 fL	55 fL obtainable with a new crt only	3
Preset Range	9 to 45 fL	Factory preset at 30 fL	3
Black Level (Brightness (with Reference Input Signal at Low Light and the Crt at −80 V Grid Cutoff))		Reference Input Signal: 0 V low light (black); +0.7 V high light (white).	
Control Range	From below cutoff to 1.3 fL		4
Preset Range	From below cutoff to 1.3 fL		4
Raster Size Change (Due to Changes in Anode Current (Light Output))			
0 to 0.64 mA	Less than 1% of screen height	Equivalent to a nominal light output of 39 fL	
0 to 1.0 mA	Less than 2% of screen height.	Equivalent to a nominal light output of 60 fL	6

WARNING

THE FOLLOWING SERVICING INSTRUCTIONS ARE FOR USE BY QUALIFIED PERSONNEL ONLY. TO AVOID PERSONAL INJURY, DO NOT PERFORM ANY SERVICING OTHER THAN THAT CONTAINED IN OPERATING INSTRUCTIONS UNLESS YOU ARE QUALIFIED TO DO SO. REFER TO OPERATORS SAFETY SUMMARY AND SERVICE SAFETY SUMMARY PRIOR TO PERFORMING ANY SERVICE.

PART II
SERVICE & INSTALLATION

NOTE

Read the Operator's and Service Safety summaries preceding Section 1.

INSTALLATION

ELECTRICAL INSTALLATION

Preliminary Check (Optional)

Since the 690SR is bulky and heavy, it is recommended that an electrical performance check be made to ensure that the instrument works properly before it is removed from its shipping pallet.

Perform the following steps while unpacking the instrument.

1. Remove only the two cardboard boxes on and around the instrument leaving the instrument sitting on the shipping pallet.

2. Install a decoder interface module in the 690SR if none is already in the instrument, and connect a video test signal to the interface module.

3. Read through this subsection (ELECTRICAL INSTALLATION) before applying mains power to the instrument.

4. Apply power to the instrument and check purity and convergence. Use a 100% or 100 IRE flat-field video test signal to check purity and a convergence (crosshatch) test signal to check convergence.

5. Set the POWER switch to OFF and disconnect the power cord from the instrument.

6. Remove the instrument from its shipping pallet and proceed with installation.

Power Source

Do not apply more than 250 Vrms between either supply conductor and ground when the instrument is wired for 230 V operation. A protective ground connection by way of the grounding conductor in the power cord is essential for safe operation.

Mains Voltage and Frequency

The instrument can be operated from either 115 Vac nominal mains voltage within a range of 103 Vac to 127 Vac or from 230 Vac nominal mains voltage within a range of 207 Vac to 250 Vac. Mains voltage must be within a frequency range of 48 Hz to 66 Hz.

Changing Mains Voltage and Fuse

The instrument is shipped with the Mains Input jumper, P427, set for either 115 Vac or 230 Vac nominal mains voltage with the proper fuse installed. The mains voltage for which P427 is set is shown on a voltage plate on the rear

panel of the instrument. To change the mains voltage, proceed as follows.

1. Set the 690SR POWER switch to OFF and remove the power cord from the instrument. Wait five minutes before removing the power supply from the mainframe.

2. Remove the top-front chassis cover, the top-rear chassis cover, and the crt neck cover from the mainframe. With a wedge-shaped tool, lift the crt anode cap high enough to discharge the crt to chassis ground with a jumper strap (CONNECT THE JUMPER STRAP TO CHASSIS GROUND FIRST).

3. Disconnect the crt cable from P100 by turning the coaxial anode lead cap at P100 counterclockwise until it stops. Pull the coaxial anode lead straight out from P100, ground the contact to chassis ground, and secure it to the chassis.

4. Disconnect the focus connector from the power supply assembly, A7, by pulling the connector outward, and disconnect all of the other pin connectors. See Fig. 4-1b.

5. Remove the power supply assembly from the mainframe by removing the five 6-32 PNH screws securing the power supply assembly to the mainframe. See Fig. 4-1a. Remove the three wing nuts on the crt neck component side securing the power supply assembly to the mainframe. Disconnect the power supply assembly from the mainframe.

6. Pull the power supply assembly outward from the left side of the instrument sufficiently to gain access to the remaining degauss coil and crt filament connectors.

7. Remove the power supply assembly from the instrument by pulling outward.

8. Place the power supply assembly on its side on the work bench with the heat sink at the bottom.

9. Release the bottom panel by removing the six screws shown in Fig. 4-1c.

10. Lift the bottom panel from the power supply assembly. Leave the power and degauss switches with wiring connected as shown in Fig. 4-1d.

11. Jumper J427 on A7A1A1 (LV Power Supply Power Input board) is placed over pins 1 through 5 for 115 Vac and over pins 2 through 6 for 230 Vac nominal mains voltage. Move J427 jumper to the desired mains voltage range position.

12. Change the mains power plate on the rear heat sink of the instrument to indicate the nominal mains voltage and operating range of the instrument.

13. Change the mains fuse. Fuse ratings are listed on the mains power plate of the low voltage power supply, and in the Replaceable Electrical Parts list of this manual.

14. Reinstall the power supply assembly in the instrument by reversing steps 1 through 10.

Preset Jumper Positions

Certain pin jumpers have their jumper positions preset at the factory during calibration. Some of these jumpers may be reset by the user as conditions warrant. For example, suppose the Mains Connector jumper is factory-set for 115 V nominal mains voltage and available mains nominal voltage range is 230 V, then the Mains Connector jumper (J427 jumper on the LV Power Supply Power Input board) must be reset for this voltage range. Table 4-1 lists all the jumpers, their factory-set positions, and their alternate positions.

NOTE

Options 01, 02, and 11 of the 690SR Color Monitor have a ribbon cable connecting J949 on the Convergence Generator board, A8A2, to J715 on the Control board of the interface module. If a 690SR mainframe originally purchased as part of Option 01, 02, or 11 is later used with a RGB interface module, the cable at J949 on the Convergence Generator board must be replaced by a pair of two-pin jumpers over pins 1 and 2 and pins 3 and 4 of J949, and pins 5 and 6 of J949 can be left open.

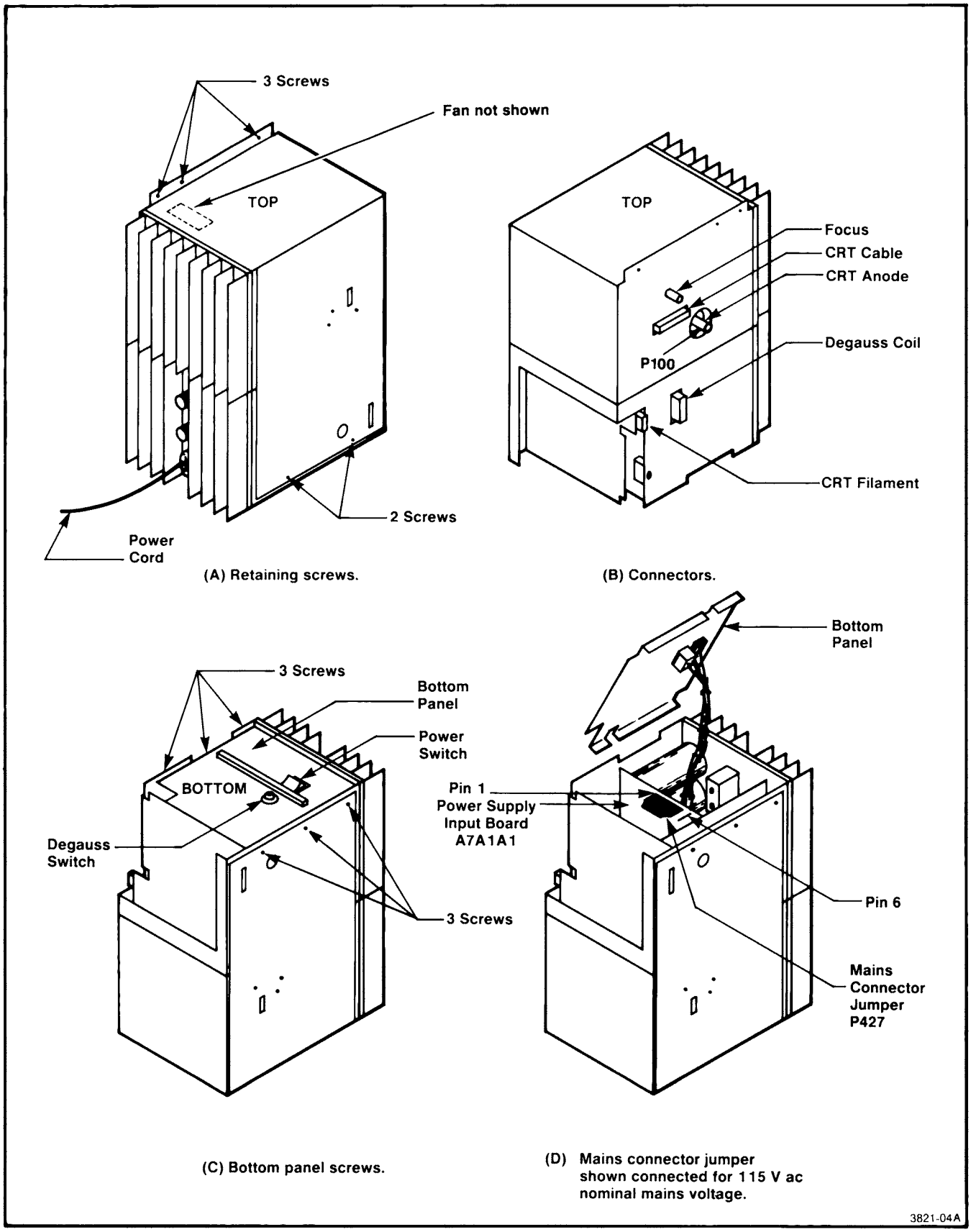

Fig. 4-1. Obtaining access to the Mains Connector jumper P427 in the power supply assembly.

Table 4-1
FACTORY-SET JUMPER POSITIONS

Name of Circuit Board	Jumper For	Factory-Set Positions	Jumper Function
A7A1A1 LV Power Supply Power Input	J427	1 through 5 (115 Vrms);	Mains Voltage Selector
		2 through 6 (230 Vrms)	
A7A1A2 LV Supply Inverter	J431	Open	Troubleshooting Aids
	J435	Open	
A8A2 Convergence Generator	J117	Open	Calibration Aids
	J130	Open	
	J160	Open	
	J235	Open	
	J261	Open	
	J320	Open	
	J335	Open	
	J412	Open	
	J425	Open	
	J600	Open	
	J634	Open	
	J635	Open	
	J735	Open	
	J700	4 Spare Jumpers	Jumper Storage Pins
	J949[a]	1 & 2, 3 & 4	Enables CONTRAST and BLACK LEVEL controls to function.
A9A1 Raster Control	J820	2 & 3	Test Aid
A10A1 Vertical Deflection	J542	2 & 3 (+15 V)	Pin Amplifier Supply Voltage
A11A1 Horizontal Deflection	J120[b]	1 & 2	Linearity Balance Range
	J720	1 & 2	Horizontal B+ Selector
	J840	2 & 3	Test Aid
A11A2 Horizontal Delay Stabilizer	J105[b]	3 & 4	'S' Capacitor Selectors
	J205[b]	1 through 4	
	J307[b]	2 & 3	'S' Capacitor Selectors
	J325	1 & 2	Test Aid
	J405	1 through 4	'S' Capacitor Selectors
	J505	1 through 6	
A14A1 Convergence Output	J131	2 & 3	Troubleshooting Aids
	J239	2 & 3	
	J437	2 & 3	
	J637	2 & 3	
	J853	2 & 3 (+15 V)	Convergence Vcc Selector

The instrument is now ready for power to be applied.

[a] These jumpers are only used when an Interface Module Control board is not installed.

[b] The position of these jumpers is determined during calibration.

Power Connection

Be sure that the POWER switch is set to OFF before connecting the power cord to the instrument. The male end of the power cord must match one of those shown on the Accessories tabbed page at the rear of the manual.

NOTE

The proper power cord is included in the accessories package for the "Country of Use" as listed on the order. Otherwise the North American power cord is shipped with the instrument.

After connecting the power cord to the instrument, a retaining bracket may be installed to hold the power cord in place. This retaining bracket and mounting screws are also provided with the accessories package. Whether this retaining bracket is installed or not is left to the discretion of the user. See Fig. 4-2 for the location of the power cord retaining plate.

Initial Turn On

Install an interface module in the instrument, and apply a video test signal to the interface module.

Apply power to the instrument and allow it to warm up for 45 minutes.

NOTE

Always apply power to the instrument at least 45 minutes before making any measurements.

After the instrument has warmed up, check purity and convergence. Geographical location of the instrument, such as moving from one location to another or turning the instrument relative to the earth's magnetic field may affect purity and convergence. Also, vibrations during shipping may move the yoke from its calibrated position and thus affect purity, convergence, and linearity.

If necessary, readjust purity and convergence by performing adjustment steps 10, 12, and 25 in Section 7 of this manual.

Check all the assemblies to make sure that all jumpers are in their correct positions.

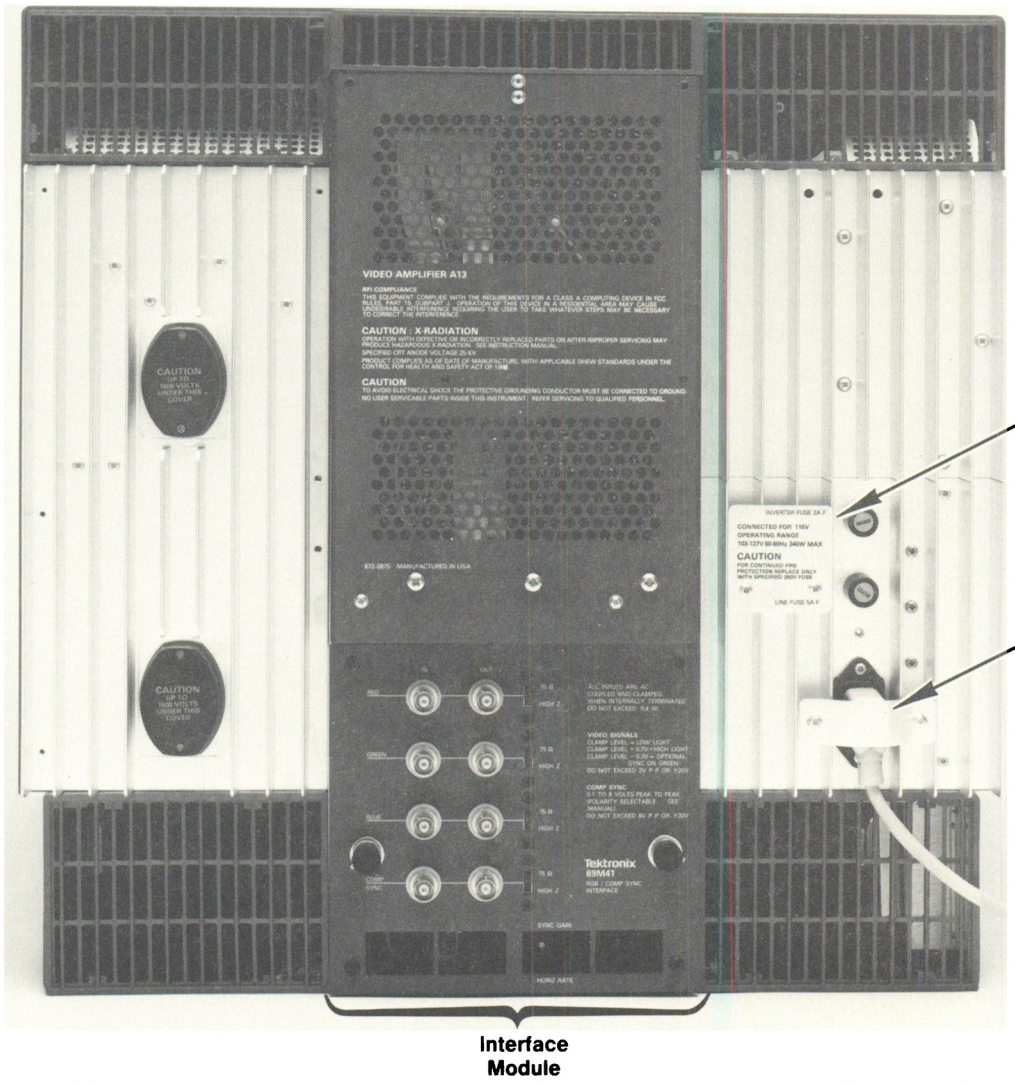

Fig. 4-2. Power cord retaining plate.

RACKMOUNTING

PRELIMINARY

Instrument Dimensional Drawing and Ventilation Areas

Refer to Fig. 4-3.

Description of Slide-Out Track Assemblies

The slide-out tracks consist of two assemblies, one for the left side of the instrument and one for the right side. Each assembly consists of three sections. Figure 4-4 illustrates the assembly for the right side of the instrument. The stationary section with its intermediate section attaches to

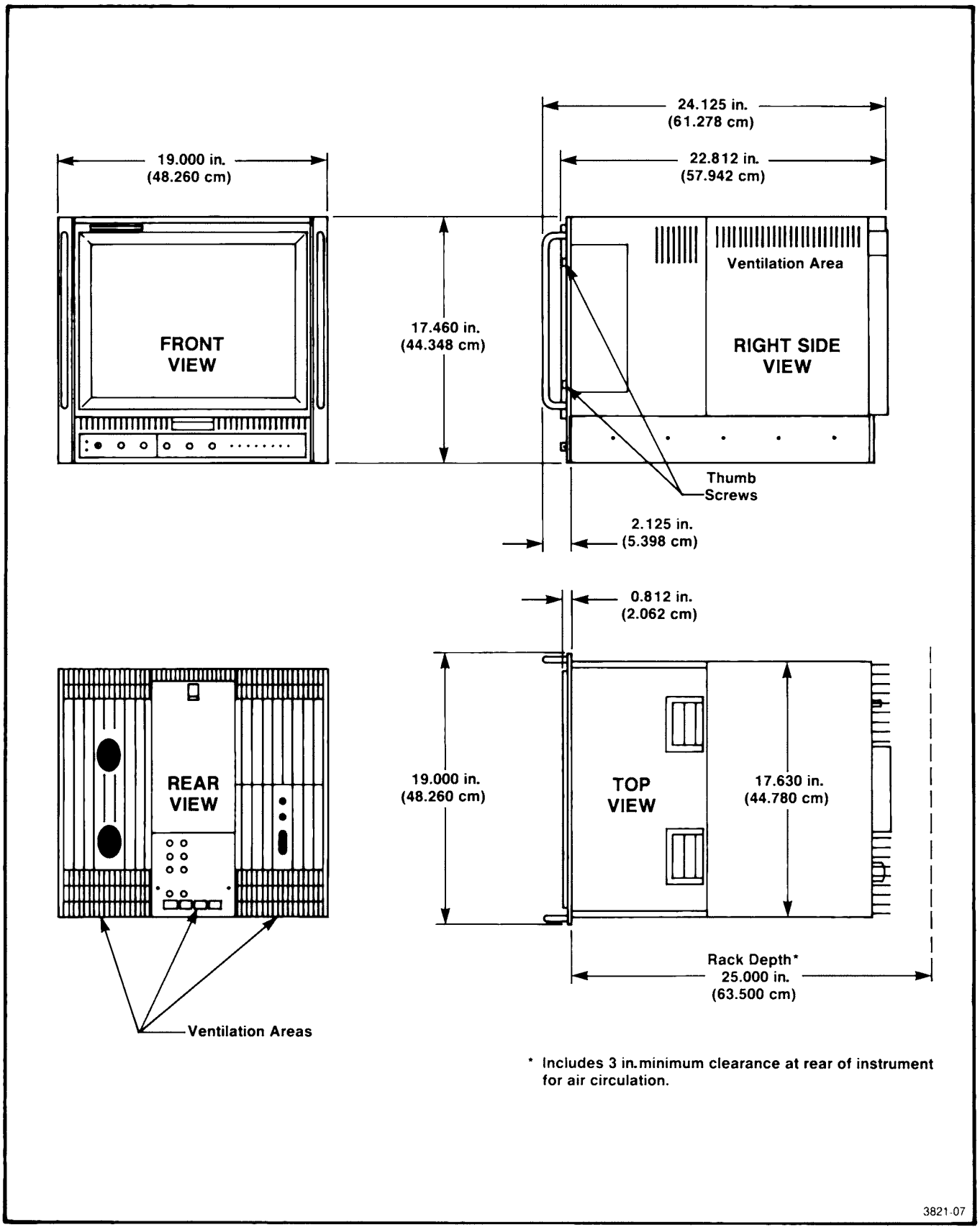

Fig. 4-3. 690SR mainframe dimensions and ventilation areas.

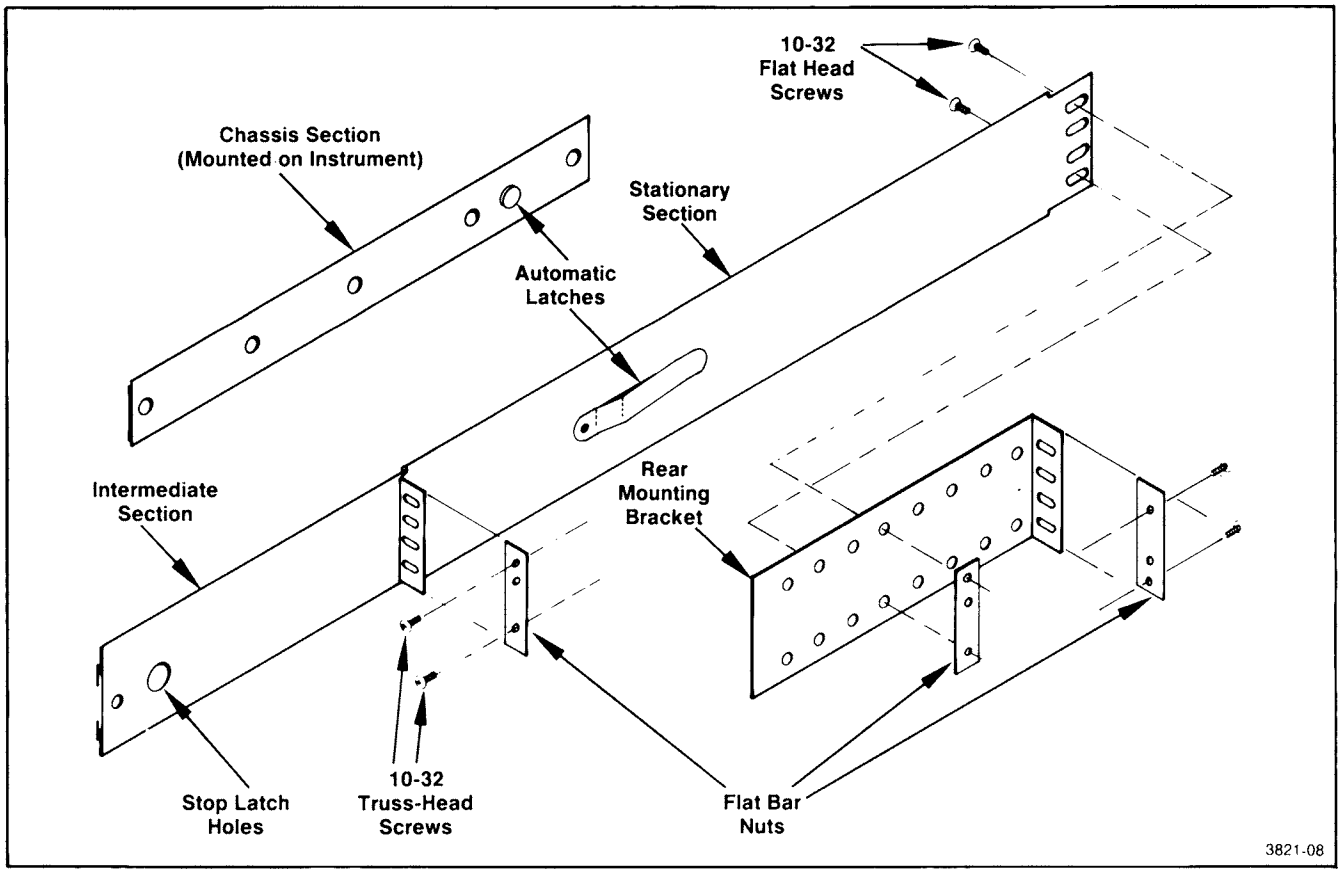

Fig. 4-4. Rackmounting hardware for right side of instrument.

the front and rear rails of the rack. The chassis sections are mounted to the left and right sides of the instrument at the factory.

The stationary and intermediate sections are shipped as a matched set and should not be separated. Extra hardware is provided with the slide-out track assemblies. This hardware enables the slide-out tracks to be mounted in a variety of racks. Not all the hardware will be used for rackmounting the instrument, and some parts will be left over.

RACKMOUNTING IN A CABINET RACK

Rack Width

The instrument fits most 19-inch wide racks and consoles whose front and rear rails conform to Universal, EIA, and Western Electric hole spacing. Refer to Fig. 4-5 and Fig. 4-6 for rack rail hole spacing.

The dimension or opening between the front rails must be 17.625 inches for a rack in which the front lip of the stationary section mounts behind an untapped front rail as shown in Fig. 4-7a. This dimension allows space on each side of the instrument for the slide-out tracks to operate freely.

Rack Depth

Allow at least 4 inches clearance behind the rear of the instrument and any enclosure of the rack for cooling air circulation and coaxial cable connections. Figure 4-3 shows the ventilation areas for the instrument.

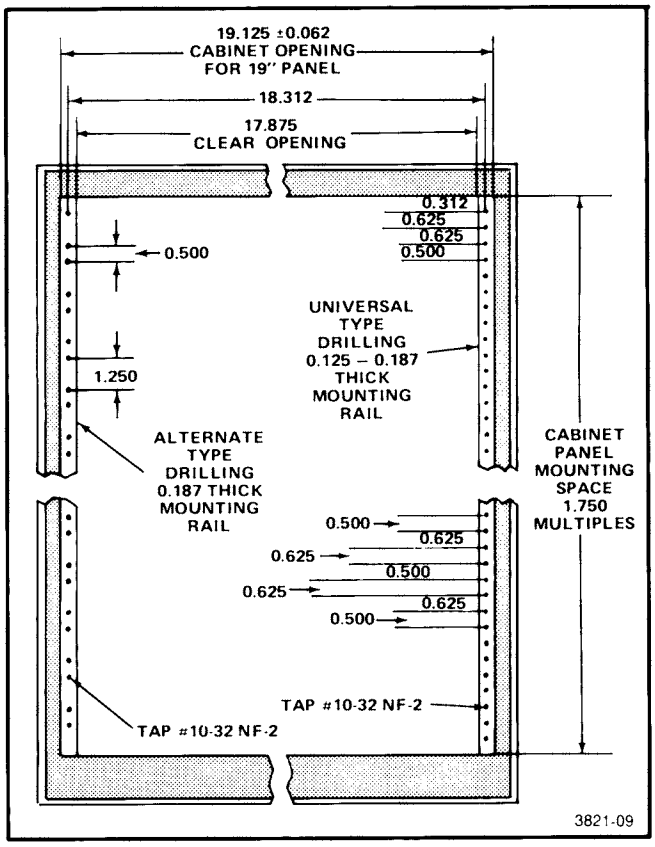

Fig. 4-5. Rack rail hole spacing. Dimensions above are given in inches.

The slide-out tracks easily mount to the cabinet rack front and rear vertical mounting rails if the inside distance between the front and rear rails is within 16.375 to 26.625 inches.

WARNING

If the 690SR is mounted in a portable rack, be sure that the rack is anchored so that the rack will not tip over when the 690SR is extended out of the rack.

Mounting Procedure

WARNING

Two persons are needed to lift the 690SR when installing in a cabinet rack due to the weight of the instrument.

1. To mount the instrument directly above or below another instrument in the cabinet rack, select the appropriate holes in the front rack rails for the stationary sections. Refer to Fig. 4-6.

NOTE

The next two steps describe how to mount the slide-out tracks to untapped rack rails. If the rack rails are tapped, for 10-32 screws, the slide-out tracks can be mounted in front of the front rails and in back of the rear rack rails using the pan head screws. The bar nuts are not needed.

2. Mount the stationary sections to the untapped front rack rails using either of the following methods:

a. If the front rails are not countersunk, use the truss head screws and bar nuts to mount the stationary sections using Fig. 4-6 and Fig. 4-7a as a guide.

b. If the front rails are countersunk, use the flat head screws and bar nuts to mount the stationary sections.

3. Mount the stationary sections to the untapped rear rails using the following method.

Mount the left stationary section with hardware provided as shown Fig. 4-7 parts b and c. Note that the rear mounting bracket can be installed either way so the slide-out tracks will fit a deep or shallow cabinet rack. Refer to Fig. 4-7 parts b and c when mounting the stationary sections. Make sure that the stationary sections are aligned horizontally, that is level and parallel with each other.

Adjustments

NOTE

Two persons are needed. One person is needed to hold the instrument in place while the other person adjusts the slide-out tracks.

To adjust the slide-out tracks for smooth operation, proceed as follows.

1. Insert the instrument into the rack as described and shown in steps 1 through 4 of Fig. 4-8 "TO INSTALL" procedure.

2. Adjust the slide-out tracks for proper spacing by pulling the instrument outward until the front of the instrument protrudes approximately 10 inches from the rack. Then, slightly loosen the screws that fasten the slide-out track stationary sections to the front rails of the rack. Allow the slides to seek their proper width. Check that the instrument is centered, and tighten the screws.

3. Tighten the thumbscrews under the handles (see Fig. 2-1 in Section 2) to hold the instrument securely in the rack.

Maintenance

The slide-out tracks do not require lubrication. The special dark gray finish on the sliding parts is a permanent coating that reduces friction, and thus eliminates any need for lubrication.

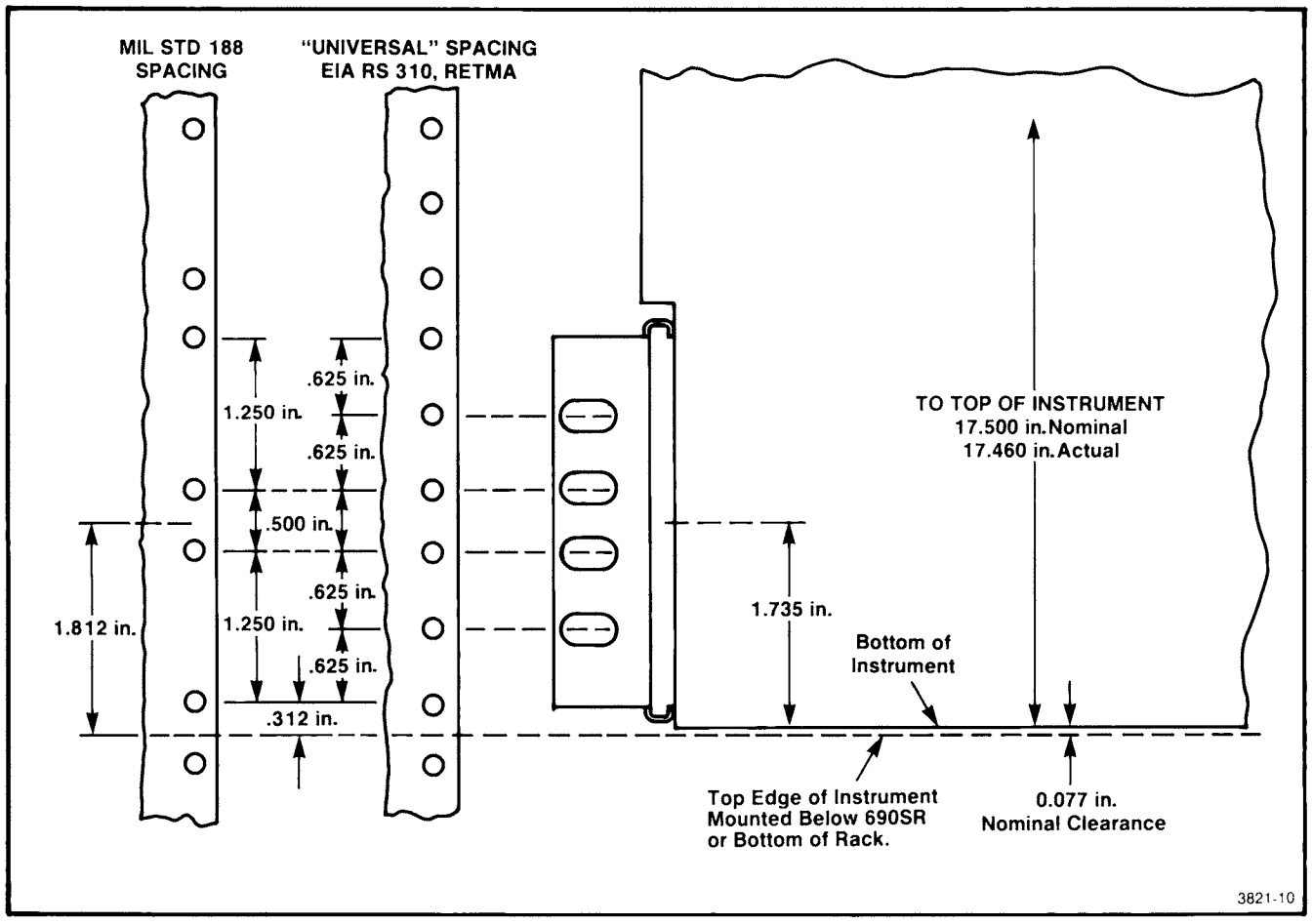

Fig. 4-6. Rackmount hole spacing.

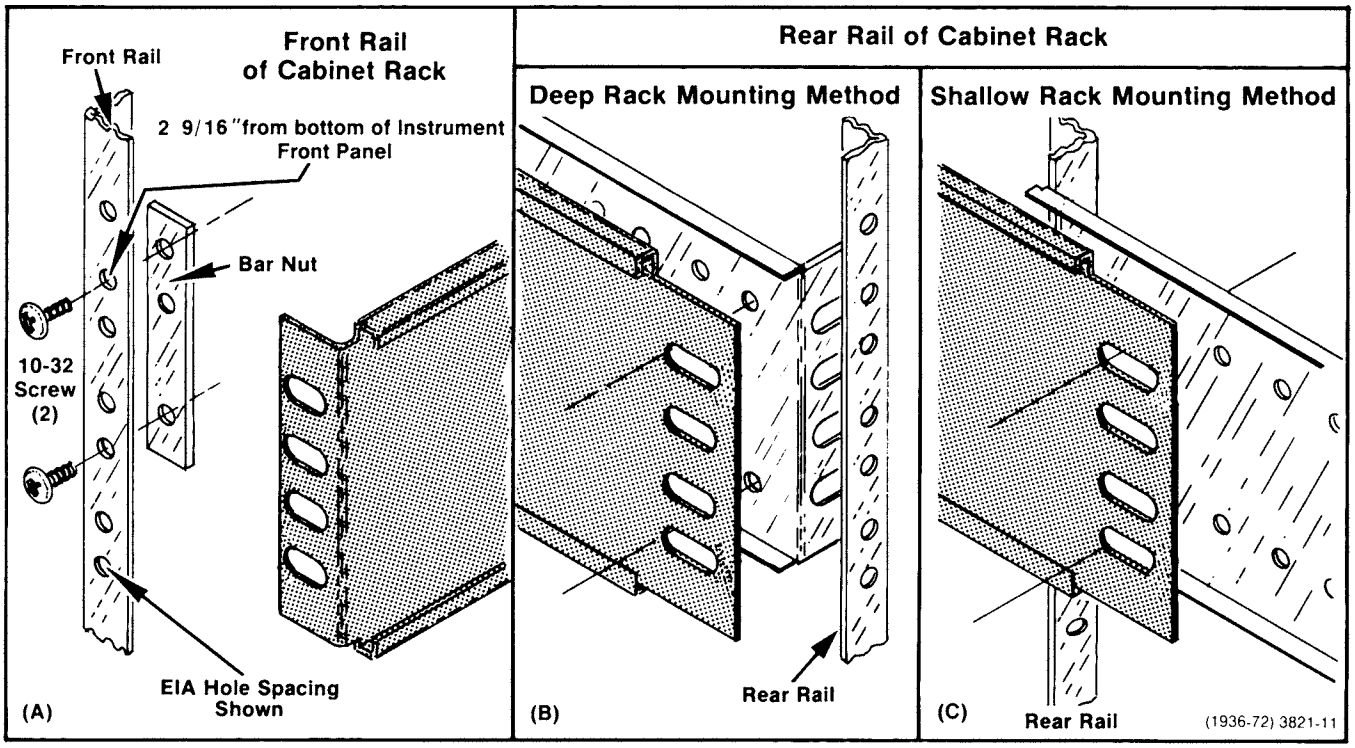

Fig. 4-7. Mounting the left stationary section to the rails in the cabinet rack.

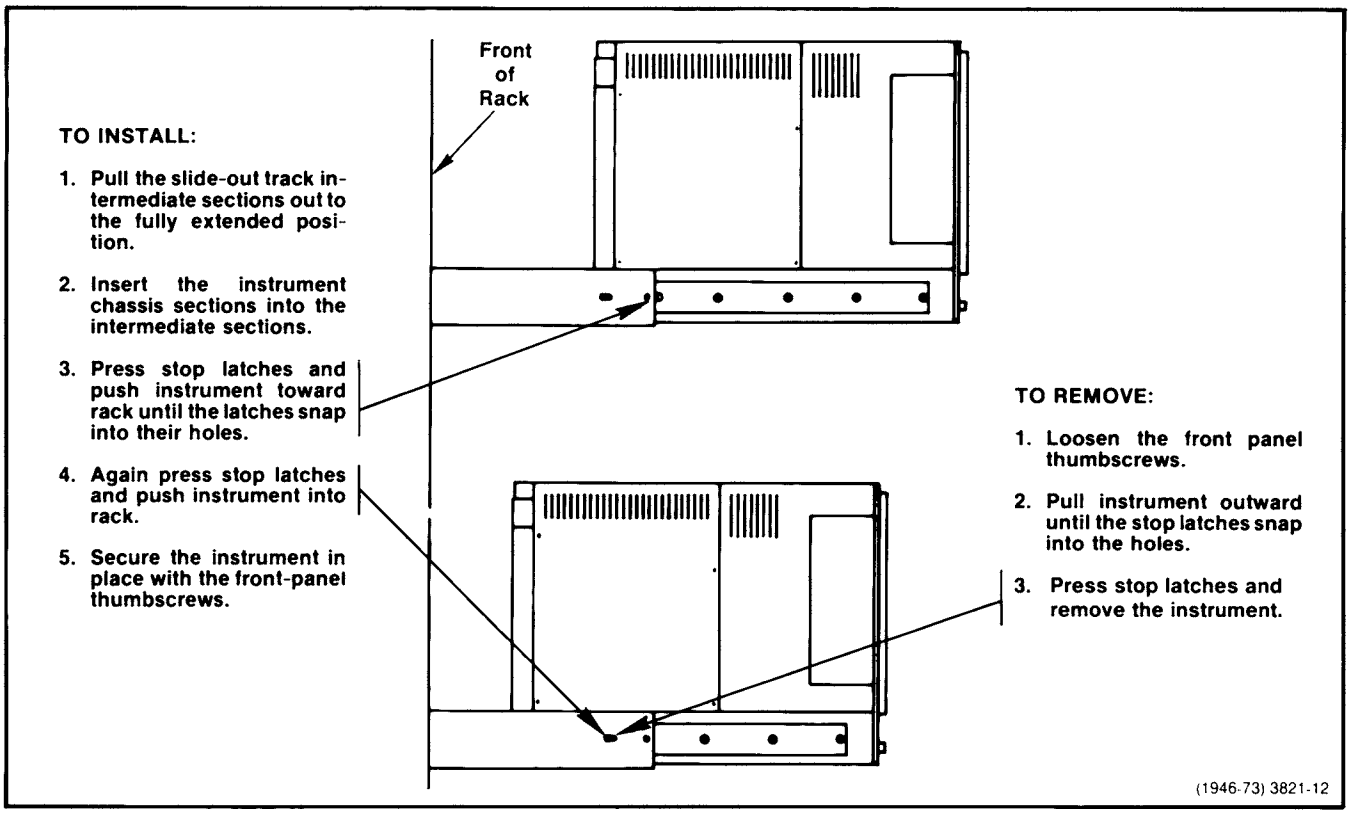

Fig. 4-8. Installing and removing the instrument.

THEORY OF OPERATION

Introduction

This section contains a discussion of the operation of the various circuits in the 690SR Color Monitor. The 690SR is a color monitor mainframe that can be configured for a variety of applications by the addition of plug-in interface modules. The mainframe without interface modules contains a video amplifier, raster control, vertical deflection, horizontal deflection and convergence circuitry, as well as a high voltage power supply and low voltage power supply. Virtually all the controls required to make day-to-day convergence, raster, and video amplifier adjustments are located inside a lockable front drawer.

The theory of operation is divided into two sections: the block diagram description and the detailed circuit descriptions. For additional troubleshooting and maintenance information, see the Maintenance section and the Calibration section of this manual.

BLOCK DIAGRAM DESCRIPTION

(Refer to Block Diagram foldout page in Section 12)

Video Amplifier

The video amplifier amplifies the red, green, and blue signals and applies them to the crt red, green, and blue control grids. The signals are applied to the monitor through the interface module and fed through 75 Ω cables to the video amplifier.

The video amplifier consists of three identical channels. Each of the channels has individually adjustable White Balance and Black Balance controls (located in the mainframe front drawer). These controls allow the gain and dc balance of each amplifier to be adjusted with respect to the specific luminance characteristics of its associated phosphor. In addition, the front-panel CONTRAST and BLACK LEVEL controls provide overall adjustment of contrast and black level for all three channels together.

The horizontal retrace blanking signal blanks the red, green, and blue signals during horizontal retrace. Also during each horizontal retrace, the video amplifier automatically recalibrates the gain and dc bias of each channel's gain cell, with respect to the settings of the CONTRAST control and White Balance and Black Balance adjustments. The horizontal retrace blanking signal initiates this recalibration function.

The vertical retrace signal blanks the red, green, and blue signals during vertical retrace. Also during vertical retrace, the beam current is sampled and compared with a preset level. The crt control grid cutoff voltage is then reset. This beam current sampling technique provides a stable black level regardless of changes in the video amplifier controls.

The video amplifier also produces the vertical retrace blanking signal, which is applied to the high voltage supply.

Raster Control

The raster control produces the vertical and horizontal timing information, which determines the location of the raster scan lines on the crt screen. Vertical triggers applied to the monitor through the interface module provide timing information for the vertical raster control signals. Three vertical raster control signals are produced: the vertical ramp, the vertical deflection ramp, and the top and bottom pin and/or tilt signal. The vertical ramp is a linear ramp signal that provides vertical position information to the raster control and convergence circuitry. A geometry correction circuit provides 'S' correction of the vertical ramp signal to create the vertical deflection ramp. The vertical deflection ramp controls the vertical component of the raster. The top and bottom pin and/or tilt signal provides additional geometry correction for the raster. The vertical deflection ramp and the top and bottom pin and/or tilt signal are applied to the vertical deflection circuitry.

Horizontal retrace pulses from the horizontal deflection circuitry provide timing information for the horizontal raster control signals. Three horizontal raster control signals are produced: the horizontal ramp, the horizontal width control, and the side pin and/or tilt signal. The horizontal ramp is a linear ramp signal that provides horizontal position information to the raster control and convergence circuitry. A second geometry correction circuit provides 'S' correction of the horizontal ramp signal to create the horizontal width control signal. This signal is a dc level that determines the width of the horizontal component of the raster. The side pin and/or tilt signal provides additional geometry correction for the raster. Both the horizontal width control and the side pin and/or tilt signals are applied to the horizontal deflection circuitry.

It is important to note that both the vertical raster control and the horizontal raster control circuitry generate constant amplitude signals regardless of the input timing signal frequency. A constant amplitude vertical ramp is generated for any vertical trigger from 43 Hz to 90 Hz; a constant amplitude horizontal ramp is generated for any horizontal retrace pulse from 15 kHz to 37.5 kHz. Since the vertical deflection, horizontal deflection, and convergence circuitry is referenced to the amplitudes (screen position) of the raster control signals rather than time, the monitor is able to deliver a linear, full screen raster display over a wide range of scan rates.

Vertical Deflection

The vertical deflection circuitry amplifies the vertical deflection ramp and the top and bottom pin and/or tilt signal, then applies them to the vertical deflection yoke. The magnetic field of the vertical deflection yoke controls the vertical position of the combined red, blue, and green beams on the crt screen, and thus controls the vertical component of the raster.

The vertical deflection circuitry also produces the vertical scan fail line, which indicates the condition where the current through the vertical deflection yoke is not of sufficient amplitude to allow operation of the monitor without damage to the crt. This signal is applied to the high voltage power supply.

Horizontal Deflection

The horizontal deflection circuitry produces the horizontal deflection ramp, which controls the horizontal component of the raster. Horizontal phased triggers applied to the monitor through the interface module provide timing information for the horizontal deflection ramp. In addition, the horizontal width control and side pin and/or tilt signals provide amplitude information. Variable flyback capacitor values allow the frequency of the horizontal deflection ramp to be selected over a range of 15 kHz to 37.5 kHz. The horizontal deflection ramp is applied to the horizontal deflection yoke. The magnetic field of the horizontal deflection yoke controls the horizontal position of the combined red, blue, and green beams on the crt screen, and thus controls the horizontal component of the raster.

The horizontal deflection circuitry also produces the horizontal retrace blanking signal, the horizontal retrace pulses, and the horizontal scan fail signal.

The horizontal retrace blanking signal synchronizes the video amplifier and high voltage power supply with the horizontal deflection ramp. It is also applied to the convergence control circuitry.

The horizontal retrace pulses synchronize the horizontal raster control signals with the horizontal deflection ramp.

The horizontal scan fail signal indicates the condition where the current in the horizontal deflection yoke is not of sufficient amplitude to allow operation of the monitor without damaging the crt. This signal is applied to the high voltage power supply circuitry.

Convergence

The convergence control circuitry produces convergence correction signals that are applied to the convergence yokes. These signals insure that the red, green, and blue beams converge (overlay) in all areas of the crt screen.

The vertical ramp and horizontal ramp provide position information for the convergence control circuitry. Using this position information, the convergence control generates four convergence correction signals: red convergence, green convergence, blue convergence, and blue lateral convergence. (The horizontal retrace blanking signal blocks horizontal retrace spikes from being fed to the convergence control output.)

Convergence Output

The convergence output circuitry amplifies the four convergence correction signals and applies them to the convergence yokes. The red, green, and blue convergence signals go to the radial convergence yoke. The blue lateral convergence signal goes to the blue lateral board (part of convergence yoke assembly A5).

High Voltage Power Supply

The high voltage power supply creates four supply voltages: +25 kV, +8.33 kV, focus, and G2 supplies. The

+25 kV and +8.33 kV supplies are generated using a resonant, flyback circuit. The horizontal retrace blanking pulse from the horizontal deflection circuitry is used to synchronize this circuit with the horizontal deflection ramp. The +25 kV supply drives the crt anode, and thus provides the basic beam current drive.

The 8.33 kV supply provides power for the focus circuit. The focus circuit is divided into the dynamic focus and static focus. The dynamic focus circuit amplifies the dynamic focus signal from the raster control circuitry. It is then combined with the static focus signal and applied to the focus grid of the crt. The vertical retrace blanking signal from the video amplifier is used to blank the dynamic focus signal during vertical retrace.

The vertical and horizontal scan fail signals initiate shut down of the high voltage supply if the vertical or horizontal deflection current is not sufficient to allow operation of the monitor without damaging the crt. In addition, the high voltage power supply provides internal overcurrent and overvoltage protection circuits.

The high voltage power supply produces three G2 (screen grid) supplies: Red G2, Green G2, and Blue G2. Each of these supplies is individually adjustable.

Low Voltage Power Supply

The low voltage power supply produces the low voltage supplies required to operate the various circuits in the instrument. It is a high efficiency supply that provides preregulation of the supply voltages, overcurrent and overvoltage protection, and backup overcurrent and overvoltage protection. A second stage of voltage regulation of the supply voltages is provided on each circuit board when required.

DETAILED CIRCUIT DESCRIPTION

VIDEO AMPLIFIER

DIAGRAMS 2, 3 AND 4

The video amplifier circuitry is located on the Video Amplifier board, A13A1, and the Crt Socket board, A12. This circuitry provides three nearly-identical video amplifiers, one for the red signal, one for the green, and one for the blue. Each amplifier drives a separate crt control grid. White and black balance controls are provided for each amplifier. These controls allow individual adjustment of the gain and dc level of each amplifier to accommodate the different luminance values of the three phosphors. They also allow fine adjustment of the individual color intensities for optimum color balance. Once the gain and dc level of each amplifier is set, the BLACK LEVEL and CONTRAST controls, located on the front panel of the mainframe front drawer, allow overall adjustment of black level and contrast for all three amplifiers. The circuitry also generates a number of timing signals that are used to sample black and white reference levels for automatic gain and bias control and to sample beam current for automatic adjustment of the control grid cutoff voltage.

DIAGRAM 2

Since the three video amplifiers are nearly identical, only the green video amplifier is discussed in detail. The video amplifier timing information is shared by all three video amplifiers.

Video Amplifier Timing

The video amplifier timing circuit uses the vertical retrace signal from the Raster Control board, A9A1, to generate the vertical retrace blanking pulse, the beam current sample blanking pulse, the vertical retrace blanking pulse, the beam current sample pulse, and the beam current reference enable pulse (see Fig. 5-1). It uses the horizontal retrace blanking signal from the Horizontal Deflection board, A11A1, to generate the white reference enable pulse, the white sample pulse, and the black sample pulse.

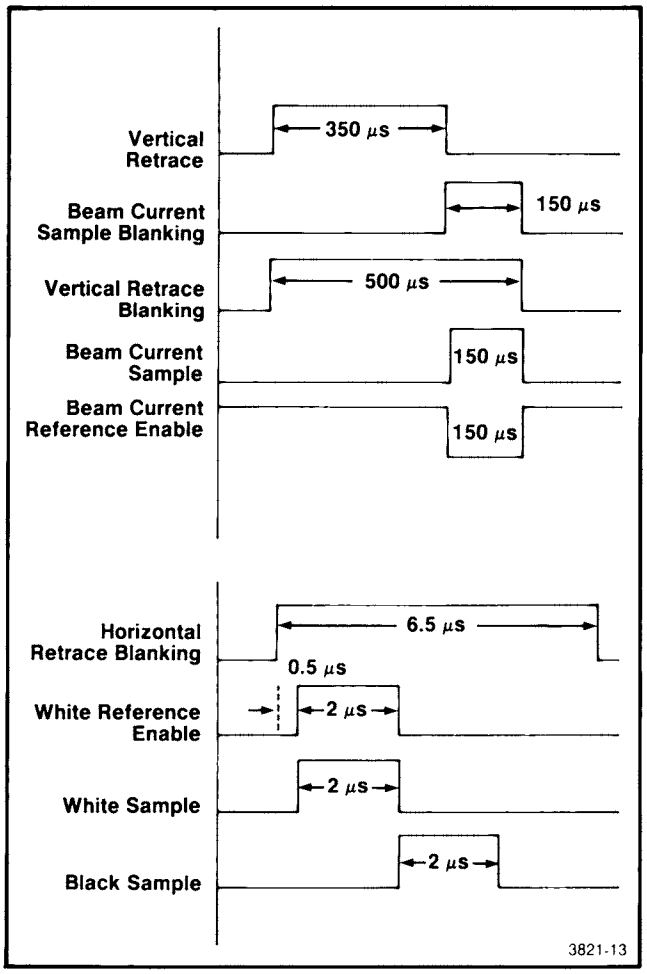

Fig. 5-1. Video amplifier timing.

The 350 μs wide, positive-going vertical retrace pulse is applied to the Video Amplifier board through J215 pin 32. The pulse is then fed to the pin 5 input of one-shot U510A. On the falling edge of the pulse, U510A produces a 150 μs wide, positive-going beam current sample blanking pulse at pin 6 and a 150 μs wide, negative-going beam current reference enable pulse at pin 7. OR gate CR617 and CR618 combines the beam current sample blanking pulse with the vertical retrace pulse to form the 500 μs wide vertical retrace blanking pulse, which is fed to the high voltage power supply through J215 pin 30. In addition, four-input OR gate CR422, CR423, CR424, and CR425 combine the beam current sample blanking pulse with the vertical retrace pulse, green screen switch signal, and the optional video blanking pulse for use in blanking the output of the gain cell (the first stage of amplification of the video amplifier). Transistor Q608 inverts the negative-going beam current reference enable pulse to create the positive-going beam current sample pulse.

The 6.5 μs wide positive-going horizontal retrace pulse is applied to the Video Amplifier board through J215 pin 14 and is fed to pin 12 of one-shot U510B. On the positive-going edge of this pulse, U510B produces a 0.5 μs wide, positive-going pulse at its pin 10 output. The negative-going edge of this pulse triggers one-shot U507A, creating the 2 μs wide, positive-going white reference enable pulse at pin 6. Transistor Q408 inverts the negative-going output of U507A to create the 2 μs wide white sample pulse.

On the negative-going edge of the white reference enable pulse, U507B is triggered, creating a 2 μs wide pulse at its pin 9 output. Transistor Q409 inverts this pulse to create the positive-going black sample pulse.

The beam current sample, beam current sample blanking, beam current reference enable, white reference enable, white sample, and black sample pulses are distributed to all three video amplifiers on the Video Amplifier board.

Green Signal and Input Blanking

The green signal from the interface module is applied to the Video Amplifier board through J430. Resistors R329, R330, and R322 set the input impedance at 75 Ω. Transistor Q330 provides a current summing node for the signal. Transistor Q325, wired as a diode, provides a temperature compensated base bias level for Q330 as well as for Q338, Q357, and Q358.

Operational amplifier U310 buffers the overall black level, set by Black Level Preset adjustment R905 and BLACK LEVEL control R825 (see diagram 13). The black level at the pin 6 output of U310 is summed with the input signal at the emitter of Q330. For test purposes, the white pedestal level (White Pedestal switch S720—see diagram 13) can also be summed with the black level through U310 to create a visible display of the unblanked raster on the crt screen when there is no input signal to the video amplifier.

Transistors Q337 and Q431 blank the input signal from being applied to the gain cell during horizontal retrace. When the horizontal retrace pulse goes high at the base of Q431, Q431 is turned off, which causes Q337 to conduct current. The voltage across R438 thus rises, forward biasing CR335, reverse biasing CR336, and blanking the input signal.

Green Output Blanking

Transistors Q445 and Q356 block the output of the gain cell from being applied to the output amplifier during both vertical and horizontal retrace. When the horizontal retrace pulse, the vertical retrace pulse, or the beam current sample blanking pulse goes high, Q445 is turned on, which turns off Q356 and disconnects the gain cell stage of the video amplifier from the output amplifier stage.

A high on the green screen switch or the video blanking line also causes blanking of the output of the gain cell. Green Screen switch S606, located in the mainframe front drawer (see diagram 13), controls the green screen switch signal. Video blanking is an optional input (from the interface module).

Green Gain

The gain cell circuit is the first amplification stage of the video amplifier. Green White-Bal adjustment R705 and Green Black-Bal adjustment R805 (see diagram 13) set the nominal gain and bias current of the gain cell, respectively. During horizontal retrace, the input signal is disconnected from the gain cell (see Fig. 5-2). A white reference level and

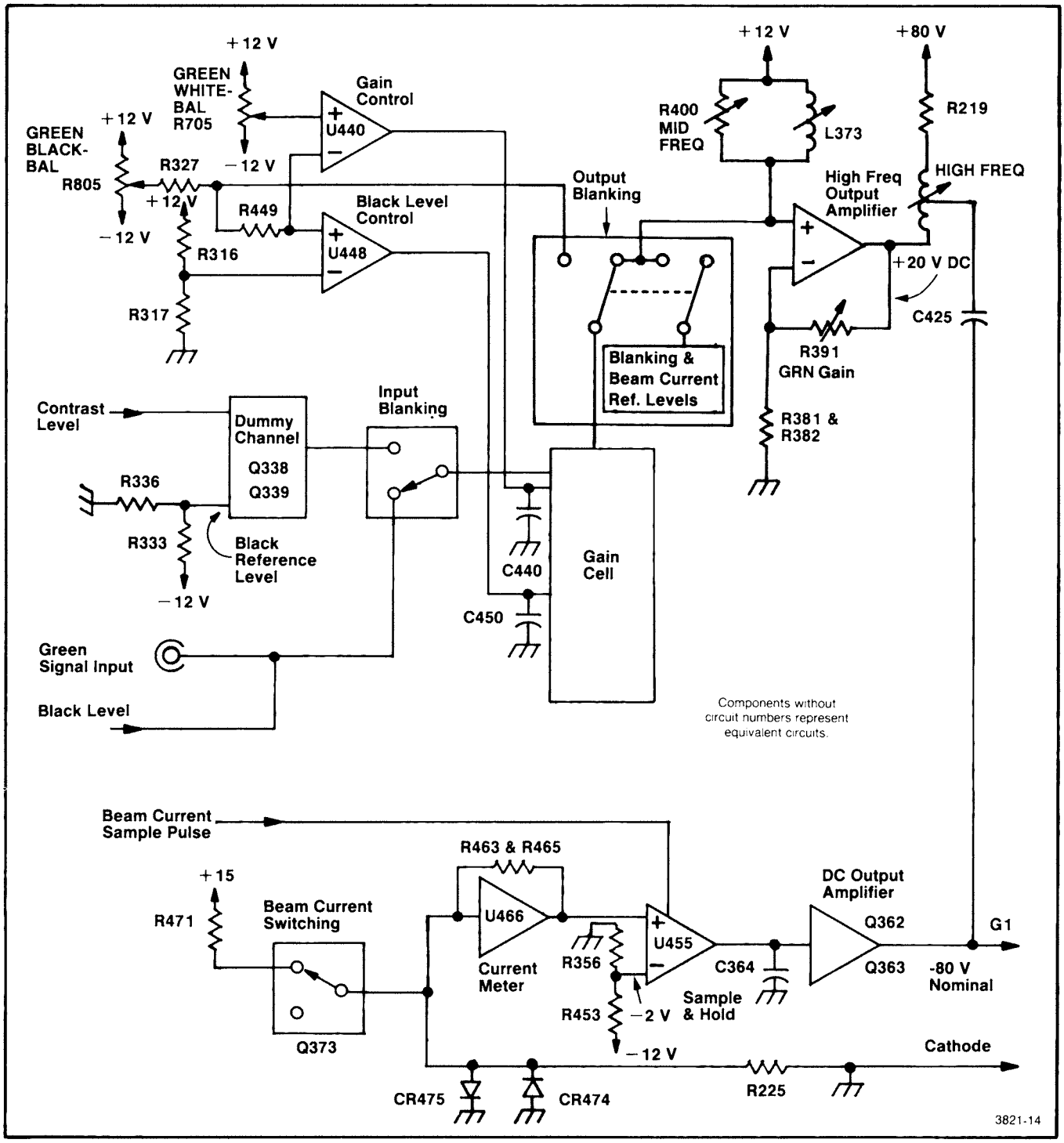

Fig. 5-2. Simplified schematic of green video amplifier.

a black reference level (from a dummy channel) are then sampled and compared with the levels set by R705 and R805. The error voltages from these comparisons are then used to automatically adjust the gain and bias current of the gain cell. Thus, when the front-panel CONTRAST and BLACK LEVEL adjustments are changed, the gain and dc bias current for each of the three gain cells are changed proportionately to maintain color balance.

Transistors Q348, Q350, and Q446 provide amplification for the gain cell. The gain of the gain cell determines the peak brightness of the display; the bias current determines the black level of the display.

Capacitor C440, Darlington pair Q437, and FET Q349 allow automatic gain adjustment. FET Q349 acts as a variable load resistor for Q348. The voltage across C440 sets the gate voltage of Q349, which determines its resistance and thus the overall gain of the gain cell.

Gain Cell Bal adjustment R335 sets the bias current for the gain cell input. Sample-and-hold capacitor C450 and Q450 control the bias current for the gain cell output at Q350 and Q446. The voltage across C450 sets the current that Q450 conducts. Varying the voltage across C450 thus varies the bias current level of the gain cell output.

When the horizontal retrace blanking pulse goes high, Q431 and Q337 disconnect the input signal from the gain cell, and Q445 and Q356 disconnect the output of the gain cell from the output amplifier.

After the blanking of the input and output of the gain cell is initiated, the white reference enable pulse at pin 6 of U507A reverse biases CR402. The white reference level, set by CONTRAST control R833 and Contrast Preset adjustment R911 (see diagram 13), is then fed through Q400, Q339, and Q338 to the gain cell input at the emitter of Q348. Transistors Q348, Q350, and Q355 amplify and invert this level and apply it to gain control sample-and-hold IC U440, where it is summed at the pin 2 input with the level set by Green Black-Bal adjustment R805. Coincident with the white reference enable pulse, the white sample pulse goes high at pin 5 of U440. Then, U440 compares the combined black balance and white reference level (TP358) with the level set by Green White-Bal adjustment R705. The error current at the pin 6 output of U440 charges C440, setting the gain of the gain cell for the next horizontal scan.

On the falling edge of the white sample pulse, Q400 and Q339 are again turned off, and the black reference level, set by R336 and R333, is fed through Q338 to the gain cell input. This level is also amplified and inverted, applied to black level sample-and-hold IC U448, and summed at pin 3 with the level set by Green Black-Bal adjustment R805. When the black sample pulse at pin 5 of U448 goes high, U448 compares the combined black level with a black balance reference level set by R316 and R317. The error current at the pin 6 output of U448 then charges C450, setting the bias current of the gain cell for the next horizontal scan.

On the falling edge of the horizontal retrace blanking pulse, the input signal at J430 is again connected to the gain cell input, and the gain cell output is connected through Q356 to the output amplifier.

Output Amplifier

The output of the gain cell is fed to the high frequency output amplifier through common-base amplifier Q356. The output amplifier consists of Q381, Q382, and Q491. Grn Gain adjustment R391 provides coarse adjustment of the gain of the output amplifier. It acts to center Green White-Bal adjustment R705. Then, R705 provides fine adjustment of the video amplifier gain. Mid Freq adjustments R400 and L373 provide pre-peaking of the input signal to compensate for capacitance in Q356.

Operational amplifier U477 and Q481 set the dc bias level of the output amplifier circuit. When the Black Sample pulse goes high at pin 5 of U477, U477 samples the voltage at the drain of Q491 and compares it through divider R482 and R493 with 0 V at its pin 2 input. The error current at the pin 6 output of U477 then charges C383. Transistor Q481 amplifies and inverts the resulting reference voltage across C383, and applies it through R384 to the base of Q382. This dc biasing circuit compensates for adjustments made to Grn Gain adjustment R391 and for ambiguity in the Q381 base-emitter voltage, in order to maintain a dc voltage at the drain of Q491 of approximately 20 V when the screen is blanked.

Resistor R112, with L115 and C317, filter the +80 V supply. Resistor R219 is the load resistor for the video amplifier output. High Freq adjustment L419 provides peaking of the output amplifer output signal to compensate for capacitance in the crt circuit. Both L373 and R400 are used in combination with L419 for adjustment of the output signal's transient response.

Beam Current Sampling

The screen grid (G2) voltage determines the cutoff voltage for the control grid (G1). During vertical retrace, the beam current sampling circuit samples the cathode current, then sets the G1 cutoff voltage to the level required to maintain 0.5 μA current at cutoff. The cutoff voltage is thus reset automatically to compensate for changes in the G2 voltage.

Dc output amplifier Q362 and Q363 set the G1 cutoff voltage, according to the voltage across C364. The cutoff voltage is nominally set to −80 V. On the rising edge of the vertical retrace pulse, Q445 blanks the output of the gain cell from the output amplifier and turns on Q357. On the leading edge of the beam current sample blanking pulse at pin 7 of U510A, CR360 is reverse biased and Q358 is turned on. The resulting current conducted through Q357 and R355, and Q358 and R360, causes an output voltage at TP419 that is approximately equal to the black level output voltage when the input signal is being applied to the output amplifier.

The green cathode is connected to the Video Amplifier board through P490 pin 6. When the beam current is not being sampled, beam current switching transistor Q373 is turned on and CR475 holds the green cathode signal path at +0.6 V, inhibiting cathode current from flowing in the beam current sampling circuit. When the beam current reference enable pulse at pin 7 of U510A goes low, Q373 is turned off. The anode of CR475 then goes to 0 V, allowing cathode current to flow through R463 and R465.

Operational amplifier U466 amplifies and inverts the current through R475 and applies it to sample-and-hold amplifier U455. Concident with the turning off of Q373, the beam current sample pulse goes high at pin 5 of U455, causing U455 to compare the beam current sample voltage at pin 3 with a −2 V reference voltage at pin 2. The error current at the pin 6 output of U455 then charges C364. The gain of U466 is set such that, if the cathode current is 0.5 μA, the voltage at pin 3 of U455 is −2 V. If the cathode current is greater than 0.5 μA, the cutoff voltage is thus increased and vice versa. Likewise, if the G2 voltage is raised, the G1 cutoff voltage is increased to maintain the 0.5 μA cutoff current, and vice versa.

Video Amplifier Power Supply Regulation

Power supply voltages of +80 V, +35 V, +15 V, +8 V, −15 V, and −160 V are applied to the Video Amplifier board from the low voltage power supply through J215. Integrated circuit, U121 produces a regulated +12 V supply; +12 V Cal adjustment R119 sets the output level of the supply. Integrated Circuits U120 and U101 produce regulated −12 V and +5 V supplies, respectively.

DIAGRAMS ◇3◇ and ◇4◇

The red video amplifier (diagram 3) and the blue video amplifier (diagram 4) operate almost identically to the green video amplifier discussed at the beginning of this section. The only exception is the addition of red Input Bal adjustment R525 and blue Input Bal adjustment R125. These controls balance the current conducted in Q524 and Q537, and Q131 and Q136, respectively. This balance is accomplished in the green video amplifier through Black Level Preset adjustment R905 (diagram 13).

VERTICAL RASTER CONTROL DIAGRAM ◇5◇

The vertical raster control circuitry is located on the Raster Control board, A9A1. The principle function of this circuitry is to generate the vertical ramp and vertical deflection ramp, which determine the vertical position of the beam on the crt screen. Along with these signals, a number of geometry signals are also produced: side pin and/or tilt, top and bottom pin and/or tilt, and dynamic focus. The vertical and horizontal deflection circuitry use these geometry signals to modify the raster to compensate for screen curvature and to ensure display linearity. The vertical raster control circuitry also produces the vertical retrace signal, which the video amplifier circuitry block uses to blank the video signal outputs during retrace.

Vertical Retrace Timing

The vertical retrace timing circuit uses the differential TTL vertical triggers from the interface module to generate a 10 μs sample pulse, a 350 μs ramp hold-off pulse, and a 360 μs vertical retrace pulse (see Fig. 5-3). The vertical triggers are applied to the Raster Control board through J800 pins 10 and L. Differential line receiver U920B converts the pair of vertical triggers into a single, negative-going edge, which is applied through NAND gate U930D (used as an inverted NOR gate) to one-shot U950A. When triggered, U950A provides a 10 μs wide pulse. The positive-going output of U950A (at pin 13) is fed through NAND gate U930C to produce the 10 μs negative-going vertical ramp sample time pulse.

The negative-going output of U950A (at pin 4) is applied to one-shot U850A. The rising edge of this U950A output (delayed 10 μs from the leading edge of the vertical trigger pulse) is coupled through U850A (pin 6) to one-shot U950B (pin 10). When triggered with this rising edge, U950B produces the 350 μs wide positive-going vertical ramp retrace pulse at pin 5.

The vertical ramp retrace pulse and the vertical ramp sample time pulse are applied to the set-reset flip-flop U930A and B to produce the vertical retrace pulse. The falling edge of the vertical ramp sample time pulse at the pin 5 input of U930B sets the pin 6 output high. The output remains high until the falling edge of the vertical ramp retrace pulse goes low at pin 1 of U930A. The width of the positive-going vertical retrace pulse is 360 μs (10 μs + 350 μs).

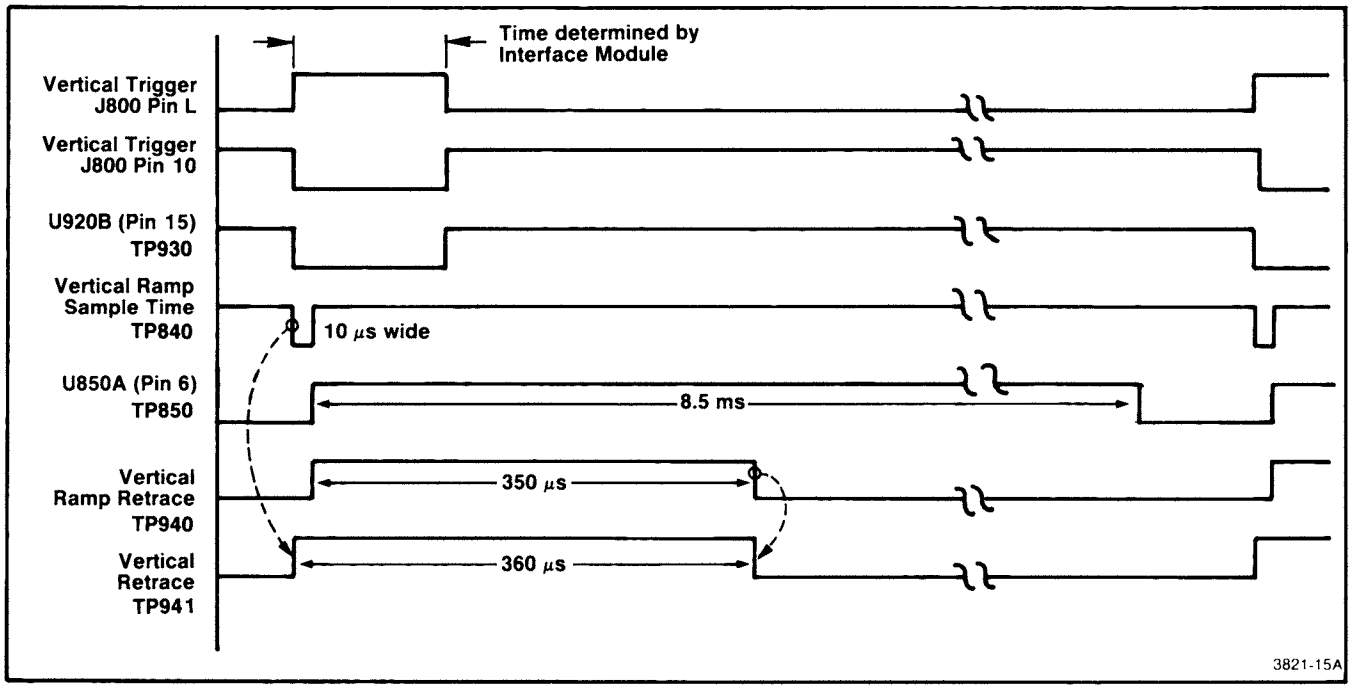

Fig. 5-3. Vertical raster control timing.

Transistor Q821 and programmable unijunction transistor Q823 form a free-running trigger generator that provides an alternate source of vertical trigger pulses for the vertical retrace timing circuit. Transistor Q821 operates as an on-off switch. When Q821 is off, C732 charges, producing a ramp at the anode of Q823. When this ramp reaches the programmed threshold voltage of Q823 (5.6 V), Q823 turns on, discharging C732 and transmitting a negative-going edge through coupling capacitor C830 to the pin 12 input of U930D. The free-run rate of this trigger generator is approximately 35 Hz.

Jumper J820 (see diagram 6) allows U920B to be disabled. When the jumper is set such that the forced free-run signal to the Strobe input of U920B (pin 13) is held low, the output at pin 15 is held high, which inhibits the vertical trigger. This is a test and troubleshooting mode. In this mode, the vertical retrace trigger generator free-runs, using its internal trigger generator (Q821 and Q823) as a source of vertical trigger pulses.

One-shot U850A performs a trigger lock out function, limiting the vertical retrace pulse rate to a maximum of approximately 120 Hz. The pin 4 output of U950A coincides with the vertical ramp sample time pulse (pin 8 of U930C). On the rising edge of this U950A output pulse, U850A (pin 7) pulls pin 9 of U930C low, inhibiting vertical triggers from being transmitted through the gate for the next 8.5 ms. This inhibit function affects the circuit in two ways. It blocks vertical triggers that occur at a rate greater than approximately 120 Hz from driving the vertical amplifier, which might occur if, for example, the operator accidentally connects horizontal triggers to the vertical trigger input. It also blocks the extra triggers from Q821 and Q823 from being transmitted through the circuit when an authentic vertical trigger source is being used.

Vertical Ramp Generator

The vertical ramp generator produces a ramp that has a constant amplitude for any frequency within the range of 43 Hz to 90 Hz. The voltage level of this ramp at any given time is directly related to the vertical position of the beam on the crt.

Sample-and-hold amplifier U730, operational amplifier U720A, and comparator amplifier U720B produce the basic constant amplitude ramp. Voltage divider R623 and R634 set the nominal peak amplitude of the ramp. Integrated circuit U720B compares the desired amplitude of the ramp with the actual amplitude, sampled just before retrace, producing a minus dc voltage reference. Integrated circuit U720A produces the ramp; the reference voltage from U720B controls the rate of rise of the ramp (the lower the reference voltage the faster the rise rate). The vertical ramp sample time pulse from U930C in the vertical retrace timing circuit is transmitted to pin 14 of sample-and-hold amplifier U730. The leading edge of this pulse occurs 10 μs before retrace and thus concides with the top of the ramp. When enabled, U730 samples the amplitude of the ramp applied to the pin 2 input and sets the pin 7 output for the equivalent dc voltage. Following this 10 μs sample period, the vertical ramp retrace pulse from the vertical retrace timing circuit

(pin 5 of U950B) turns on transistor Q820 and clamps the output of U720A at 0 V. It holds the output low for 350 μs, at which point Q820 is turned off and the ramp begins its rise. Through this feedback technique, the slope of the basic ramp signal is adjusted in this manner to maintain a constant nominal peak amplitude, regardless of the period of the vertical triggers.

Operational amplifier U620, an inverting amplifier with a nominal gain of 1, shifts the dc level of the ramp output of U720A and allows both the amplitude of the ramp and its dc level (vertical position) to be adjusted. Vertical Size adjustment R825 and Vertical Ramp Calibrate adjustment R827 (see diagram 13) provide amplitude adjustment of the inverted output ramp. For test purposes, Setup switch S726 disconnects R824, R825, and R827 from the feedback loop, causing a 90% attenuation of the ramp amplitude. Vertical Position control R820 shifts the dc level of the inverted ramp +4 V and provides dc level adjustment. The resulting negative-going vertical ramp is applied to U640 via U740B and to the top and bottom pin/tilt parabola generator via R532. It is also used by the convergence circuitry.

Vertical Deflection Ramp

Operational amplifier U740B, an inverting amplifier with a gain of 1, inverts the vertical ramp and applies it to the pin 6 input of geometry and focus correction IC U640. Vertical Linearity Balance adjustment R855 adjusts the dc level of the inverted vertical ramp at the input to U640, which affects the symmetry of the 'S' shaped vertical deflection ramp waveform at the pin 5 output of U640 (see the discussion of vertical linearity in the following paragraphs). The amount of dc shift that is added to or subtracted from the ramp signal is applied through the vertical linearity balance line (pin B of J800) to the vertical deflection circuitry to compensate for this shift. Operational amplifier U740B also produces the side tilt ramp, which becomes part of the side pin and/or tilt parabola signal. Side Tilt adjustment R652 sums selected portions of the U740B input and output ramps to create the side tilt ramp signal (see Fig. 5-4).

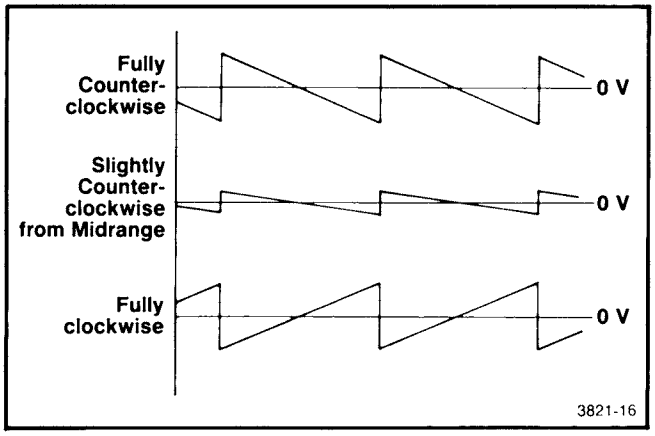

Fig. 5-4. Signal at TP650 for various settings of Side Tilt adjustment R652.

Geometry and focus correction IC U640 reshapes the linear, positive-going vertical ramp signal (input at pin 6) into an 'S' shaped vertical deflection ramp (pin 5) and two parabola waveforms; pins 13 and 15 (see Fig. 5-5). This reshaping is required to compensate for the non-linear relationship between the deflection angle of the beam and the deflection current in the yoke. To create the 'S' shaped curvature, U640 performs a point-to-point conversion of analog voltage levels, regardless of the rise rate of the input ramp, based on a non-linear (cosine) transfer function.

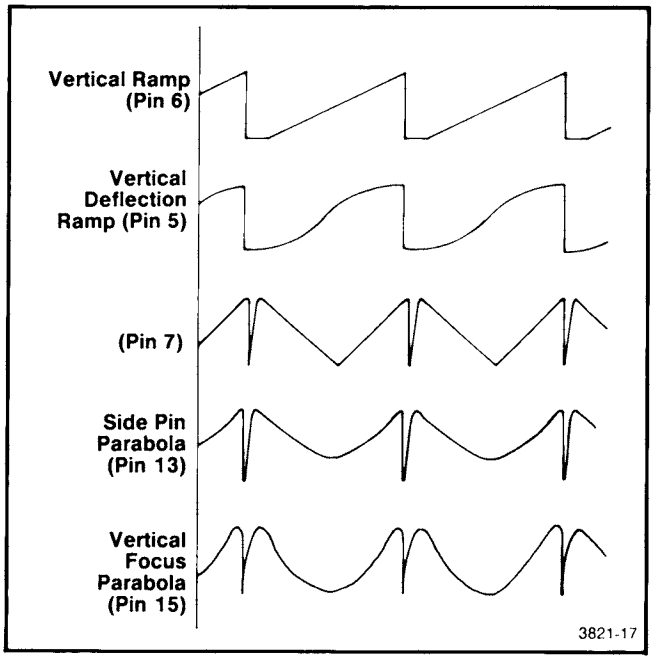

Fig. 5-5. Geometry and focus correction IC U640 input and output waveforms.

Vertical Linearity adjustment R651 controls the amount of curvature in the 'S' shaped vertical deflection ramp at pin 5. The pin 7 output of U640 provides the absolute value of the input ramp (the mid-point of the ramp being at 0 V). This signal is fed back to the Ix input (pin 1) of U640. The greater the current through R643 and R651, the greater the curvature of the vertical deflection ramp signal. This adjustment controls the size of the display at the top and bottom of the crt screen with respect to the center. Vertical Linearity Balance adjustment R855 of operational amplifier U740B, adjusts the symmetry of the 'S' shaped vertical deflection ramp, allowing more curvature to be added either to the top or to the bottom of the waveform.

Side Pin and/or Tilt Waveform Generator

The side pin and/or tilt waveform generator creates a parabola waveform, which the horizontal deflection amplifier uses to compensate for pincushion and tilt distortion of the horizontal raster. Geometry and focus correction IC U640 converts linear vertical ramp (at pin 6) into a parabola

shaped signal that appears at pin 13. This side pin parabola is combined with the side tilt ramp from R652 to produce the side pin and/or tilt waveform. Operational amplifier U740A amplifies this signal by approximately 10 times, inverts it, and feeds the resulting signal through ac coupling capacitor C840 to emitter follower Q740B. Transistor Q740A, which is wired to use the base-collector junction as a diode, provides temperature compensation for Q740B and clamps the peak of the side pin and/or tilt parabola at 0 V.

As the size of the horizontal raster decreases the amplitude of the side pin parabola required to compensate for distortion also decreases, in a non-linear fashion. The horizontal width control line, which is applied to pin 12 of U640, is used to adjust the size of the side pin parabola, causing the appropriate non-linear decreases in its amplitude when the size of the horizontal raster is decreased. Side Tilt adjustment R652 controls the degree of tilt (or skew) of the side pin and/or tilt parabola that is applied to the horizontal deflection circuitry. Side Pin/Tilt Gain adjustment R755 controls the amplitude of the side pin and/or tilt waveform and allows the signal to be reduced to 0 V for test and troubleshooting purposes. The resulting side pin and/or tilt signal is a parabola with variable amplitude and tilt.

Dynamic Focus Waveform Generator

Geometry and focus IC U640 produces another parabola at pin 15 that is used to create the dynamic focus signal. This vertical focus parabola signal and its horizontal counterpart, from the horizontal raster control circuitry, are ac coupled to the non-inverting node of operational amplifier U540. Vertical Focus Calibrate adjustment R640 and Horizontal Focus Calibrate adjustment R324 control the gain of the two parabolas, respectively. Integrated circuit U540 amplifies the combined vertical and horizontal signals, with Dynamic Focus Gain adjustment R554 providing overall gain control of the signal. The resulting dynamic focus signal is applied to the high voltage power supply, A7A2, where it provides focus compensation as a function of beam position.

Top & Bottom Pin and/or Tilt Waveform Generator

The top and bottom pin and/or tilt waveform generator creates a "bow-tie" shaped waveform, which the vertical deflection circuitry uses to compensate for pincushion and tilt distortion of the vertical raster. The horizontal ramp from the horizontal raster control circuitry is applied to this circuit through R250; the top and bottom tilt signal that consists of a dc level combined with a parabola is applied to the circuit through J800 pin D. Four-quadrant multiplier U350 sums these two signals then squares the resulting signal to create a pair of parabolas at pins 2 and 14:

$$\text{U350 Output pins 2 and 14} = (\text{horizontal ramp} + \text{top and bottom tilt signal})^2$$

Top & Bottom Pin Gain adjustment R351 sets the amplitude of the horizontal ramp applied to U350. Top and Bottom Tilt adjustment R630 (see diagram 13), which sets the dc level of the top and bottom tilt signal, controls the tilt of the output parabolas. The addition of a parabola to the top and bottom tilt signal causes the output parabolas to be skewed (asymmetrical). Integrated circuit U539 (also on diagram 13) creates this input parabola; Top & Bottom 'S' adjustment R633 determines the amplitude of the parabola and thus controls the amount of skew.

A second four-quadrant multiplier, U440, multiplies the differential sum of these two parabolas by the vertical ramp (from U620 pin 6 through R532) plus a dc level, which Pin Balance adjustment R454 sets. The output of U440 is the "bow-tie" shaped top and bottom pin and/or tilt waveform (see Fig. 5-6). The Top & Bottom Pin Gain adjustment determines the overall amplitude of the bow-tie waveform. The Pin Balance adjustment controls the zero crossing point. The Top & Bottom Tilt adjustment determines the tilt of the waveform. The Top & Bottom 'S' adjustment determines the amount of skewing or asymmetry in the individual parabolas within the waveform. Note that this skewing of the parabolas causes an 'S' shaped displacement of the vertical raster as shown in Fig. 5-6.

HORIZONTAL RASTER CONTROL DIAGRAM 6

The horizontal raster control circuitry is located on the Raster Control board, A9A1. This circuitry generates the horizontal width control (a dc voltage level) and the horizontal ramp. The horizontal width control determines the peak-to-peak current in the horizontal deflection yoke and thus the maximum left-to-right deflection of the beam on the crt screen. The circuitry also generates the horizontal focus parabola waveform. The dynamic focus circuit, which is part of the vertical raster control circuitry, uses this waveform to generate the dynamic focus signal.

Horizontal Ramp Timing

Timing for the horizontal raster control is derived from the differential TTL horizontal retrace pulses, which come from the horizontal deflection circuitry. These pulses are applied to the Raster Control board through J800 pins S and 15. Differential line receiver U920A converts the differential pulses into a single, positive-going horizontal retrace pulse, which is transmitted to Q240 and one-shot U850B (see Fig. 5-7). When triggered with the rising edge of the horizontal retrace pulse, U850B produces a 3 μs wide, positive-going pulse at its pin 10 output, which is applied to Q230.

Jumper J820 allows U920A to be disabled. When the jumper is set such that the forced free-run signal to the

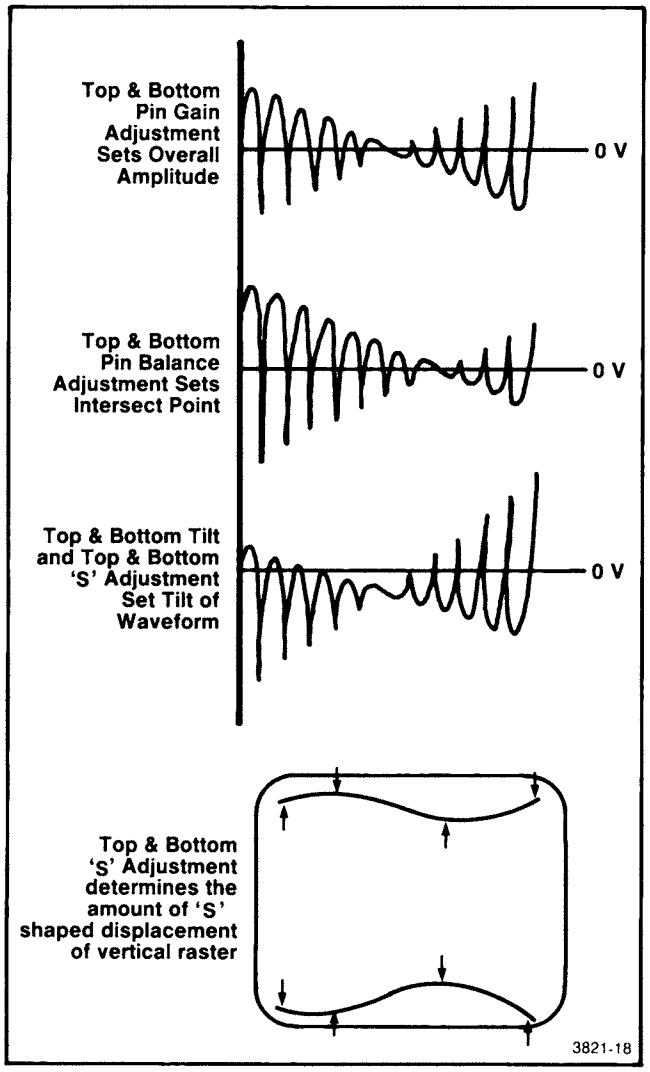

Fig. 5-6. Effect of top and bottom side and/or pin tilt waveform generator adjustments on "bow-tie" top and bottom pin and/or tilt waveform.

Strobe input of U920A (pin 3) is low, the output of the receiver at pin 2 is held high, inhibiting the horizontal retrace pulses. This is a test and troubleshooting mode. In this mode, the horizontal ramp generator free-runs, using its internal free-running trigger generator as a source of horizontal retrace pulses.

Horizontal Ramp Generator

The horizontal ramp generator produces the horizontal ramp. This signal maintains a constant amplitude for any frequency within the range of 15 kHz to 37.5 kHz.

Two constant amplitude ramps are generated in the process of producing the final horizontal ramp: the voltage reference ramp and the oversized ramp (see Fig. 5-7). The voltage level of the voltage reference ramp at any given time is directly related to the horizontal position of the beam on the crt. The oversized ramp has the same slope as the reference ramp, but because it begins its ramp-up earlier, it has a slightly greater amplitude. This earlier start-up is required to allow current switching in the vertical and convergence deflection yokes to occur prior to unblanking. A rapid change in yoke current at the time of unblanking would cause distortions in the vertical and convergence correction currents, due to the inability of the yoke and horizontal deflection amplifier to respond to fast current transitions.

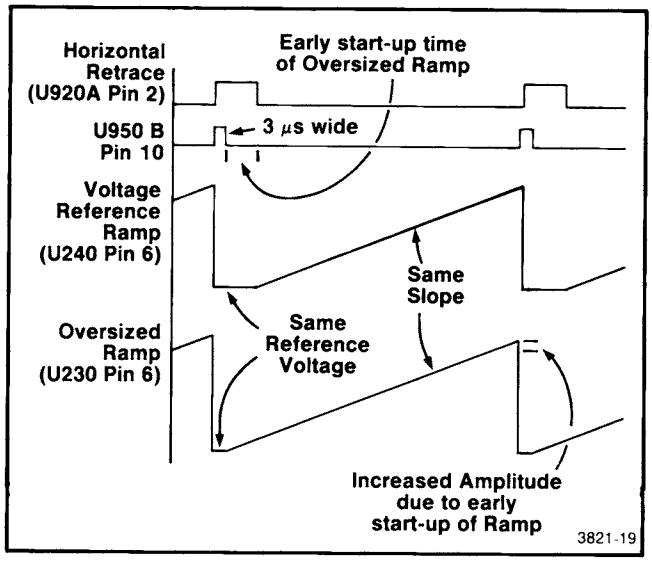

Fig. 5-7. Horizontal raster control timing.

Operational amplifier U240 and comparator amplifier U150 generate the voltage reference ramp. Horizontal Size adjustment R925 and Horizontal Size Range adjustment R928 (see Convergence Control board, A8A1) set the reference level for the ramp. Integrated circuit U150 compares the desired amplitude of the ramp (at pin 2) with the actual amplitude peak (at pin 3), detected just before retrace, and produces a minus dc voltage reference at pin 6. The reference voltage from U150 controls the rise rate of the ramp: the more negative the reference voltage, the faster the rise rate. Together, U240 and C342 form a ramp generator; Q240 acts as a switch, periodically discharging C342. At the end of retrace (falling edge of the horizontal retrace pulse at U920A pin 2), Q240 is turned off and the voltage reference ramp (pin 6 of U240) begins its rise. As it rises, sampling capacitor C350 is charged through CR242. When the horizontal retrace pulse goes high, Q240 is turned on, pulling the output of U240 back to zero and turning CR242 off. The voltage across C350 at this time is equal to the peak amplitude of the ramp. Then, U150 compares this actual peak amplitude with the desired amplitude to produce the correct reference voltage for the next ramp. Through this feedback technique, the slope of the ramp is adjusted to maintain a constant peak amplitude, regardless of the period of the horizontal retrace signal.

Operational amplifier U230 and transistor switch Q230 generate the oversized ramp in the same manner that U240 and Q240 generate the voltage reference ramp. Note that C342 and C330 are the same value (550 pF), and that Slope adjustment R240 allows the input resistance (R230 and R240) to U230 to be matched with the input resistance (R251) to U240. Since operational amplifiers U230 and U240 have the same time constant and share the same voltage reference (pin 6 of U150), the slope of the ramps generated are thus identical. The only difference between the two ramps is that the oversized ramp begins its rise earlier and thus has a greater amplitude. The width of the retrace pulse at pin 10 of U850B, which turns Q230 on and off, is narrower than the horizontal retrace pulse, allowing the oversized ramp to get a head start.

Programmable unijunction transistor Q220 provides an optional source of triggers for U220. In the absence of horizontal retrace pulse, the ramp at U230 pin 6 continues to rise until it reaches the programmed threshold voltage of Q220. When this voltage is reached, Q220 begins conducting, which turns on Q230 and causes the ramp to retrace. When the ramp voltage reaches 0 V, Q220 turns off, which turns off Q230 and allows the ramp to begin rising again. This free-run mode is used to protect the convergence circuitry from over dissipation and for test and troubleshooting. It sets a minimum allowable horizontal ramp rate of approximately 2 kHz.

The oversized ramp is ac coupled through capacitor C230 to emitter follower Q140A. Transistor Q140B, which is wired to use the base-collector junction as a diode, provides temperature compensation for Q140A and clamps the peak of the ramp to +0.6 V. With the diode drop of Q140A, the peak dc level of the ramp at test point TP140 is 0 V.

Operational amplifier U130 inverts the ramp and shifts its dc level. DC Level adjustment R145, and resistor R140 control the amount of dc shift. The reference voltage for U150, at the anode of CR150, is also the reference for U130. The DC Level adjustment is set so that the negative-going peak of the inverted ramp at pin 6 of U130 is shifted in the negative direction by one half the reference voltage (see Fig. 5-8). If, for example, the reference voltage is 7 V, the negative-going peak of the ramp will be set to −3.5 Vdc. Since this dc level is referenced to the Horizontal Size control, any change in the size of the horizontal sweep causes a proportional change in the dc level of the ramp. The horizontal ramp thus remains centered with respect to the center of the crt screen.

The output of U130 at pin 6 is the horizontal ramp. This ramp is transmitted to the horizontal deflection circuitry and the convergence circuitry. It also is transmitted to geometry and focus correction integrated circuit U330.

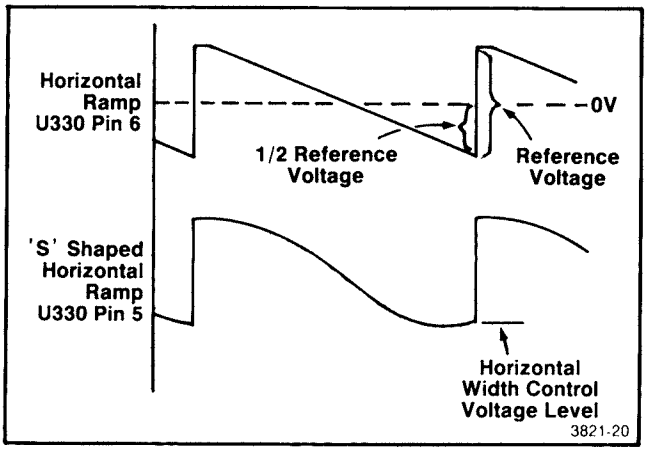

Fig. 5-8. Relationship of horizontal width control voltage level with horizontal ramp.

Horizontal Width Control

The horizontal width control circuit produces a −dc voltage level that is proportional to the desired peak current in the horizontal deflection yoke. To create this dc voltage, a voltage ramp is produced that is similar in shape to the current ramp that the horizontal deflection circuitry produces. The negative-peak voltage of this ramp is then rectified and filtered to create the horizontal width control voltage.

Integrated circuit U330 reshapes the negative-going, horizontal ramp signal (input at pin 6) into an 'S' shaped ramp; pin 5 (see Fig. 5-8). This reshaping is required to simulate the non-linear correction required in the yoke current to create a linear sweep. To create the 'S' shaped ramp, U330 performs a point-to-point conversion of analog voltage levels, regardless of the rise rate of the ramp, based on a non-linear (cosine) transfer function.

Horizontal Linearity Match adjustment R432 controls the amount of curvature in the 'S' shaped ramp. The pin 7 output of U330 provides the absolute value of the input ramp. This signal is fed back to the Ix input (pin 1) of U330. The greater the current through R432 and R433, the greater the curvature of this simulated horizontal deflection ramp signal. This adjustment is used to match the shape of this simulated ramp with that of the actual current ramp in the horizontal deflection yoke.

Since the horizontal deflection amplifier uses a resonant scan technique to create the horizontal sweep, the 'S' shaped ramp does not directly affect the horizontal beam position, as is the case with the 'S' shaped vertical deflection ramp. The peak voltage of the 'S' shaped ramp is used instead to control the peak current in the horizontal deflection yoke.

Transistors Q420A and B and Q421A and B provide a −dc level equal to the negative-going peak of the 'S' shaped ramp. Transistor Q421A acts as a buffer between U330 and the peak detector. As the ramp goes negative, C420 is charged through Q420A, which is wired as a diode. When the ramp retraces, Q421A turns off. The voltage across C420 is thus the peak amplitude of the ramp. This voltage is then fed through emitter follower Q420B to the horizontal width control output at pin R of P800. Transistor Q421B, also wired as a diode, provides temperature compensation for Q420B, and Q420A provides temperature compensation for Q421A. Capacitor C532 provides further filtering of the dc voltage. The horizontal deflection amplifier uses the resulting voltage level to set the peak current through the horizontal deflection yoke.

Integrated circuit U330 also produces a parabola waveform at pin 15. The dynamic focus waveform generator circuit combines this horizontal focus parabola signal with the vertical focus parabola signal to create the dynamic focus signal. (See the the dynamic focus waveform generator description in the discussion of the vertical raster control.)

Raster Control Voltage Regulators

Three regulated voltages are produced on the raster control board using the raw +15 V, −15 V and +8 V supplies as sources. The raw +15 V and −15 V supplies are filtered to produce the +15 V1 and −15 V1 supplies. The raw +15 V and −15 V supplies are also regulated by U310 and U110, respectively, to create the regulated +12 V and −12 V supplies. Regulator U410 regulates the +8 V supply to create the regulated +5 V supply.

VERTICAL DEFLECTION DIAGRAM 7

The vertical defection circuitry is located on the Vertical Deflection board, A10A1. This circuitry controls the current through the vertical deflection yoke and thus controls the vertical position of the beam on the crt screen. The circuitry derives its position information from the vertical retrace blanking pulse, the vertical deflection ramp, the top and bottom pin and/or tilt parabola, and the vertical linearity balance level. The vertical scan fail circuit monitors the current through the vertical deflection yoke. If the vertical deflection amplifier fails to maintain adequate vertical deflection, the high voltage supply is shut down to protect the crt.

Vertical Deflection Amplifier

The vertical deflection amplifier converts the vertical deflection ramp into a current ramp, which drives current through the vertical deflection yoke to move the beam vertically on the crt screen. The amplifier is a feedback amplifier (see the block diagram in Fig. 5-9). A 1 Ω resistor samples

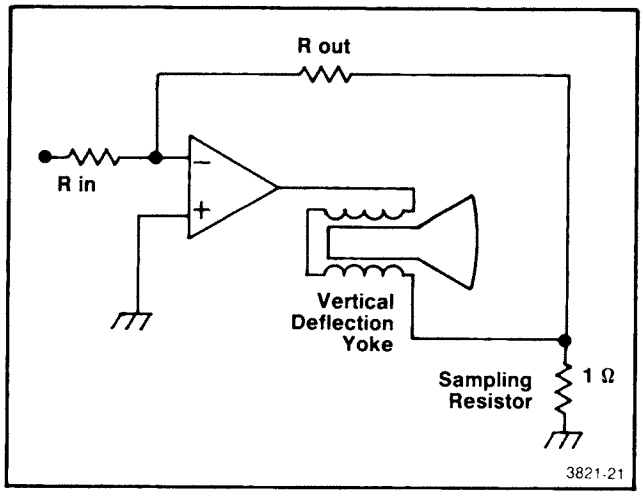

Fig. 5-9. Block diagram of the vertical deflection amplifier.

the current through the yoke. The voltage across this resistor (V out) is proportional to the current in the yoke. This voltage is fed back to the inverting input of the amplifier to regulate the current in the vertical deflection yoke.

The 'S' shaped vertical deflection ramp (see Fig. 5-10) is applied to the Vertical Deflection board through J805 pin 12. Vertical Size Calibrate adjustment R553, which sets the input resistance (R_{in}) for the entire vertical deflection amplifier, determines the overall gain of the amplifier.

The vertical linearity balance dc voltage level, which is applied to the board through J805 pin B, and Vertical Raster Centering adjustment R551 determine the overall dc level of the vertical deflection amplifier's output. The dc level on the vertical linearity balance line raises or lowers the input dc level of the vertical deflection ramp to compensate for any shift in the ramp dc level that the Vertical Linearity Balance adjustment might impart. (See the vertical linearity balance description in the discussion of the vertical raster control circuitry.) The Vertical Raster Centering adjustment sets the dc level at the input to the vertical deflection amplifier so that the beam is centered when the deflection ramp current through the vertical deflection yoke is at zero. This adjustment operates in conjunction with the Vertical Position adjustment in the vertical deflection ramp generator circuit (vertical raster control) and, in effect, centers the Vertical Position control.

Operational amplifier U416 amplifies the vertical deflection ramp. Feedback resistor R413 and compensation capacitors C315 and C411 cause the nominal gain of the amplifier to vary with frequency.

Transistor Q420, wired in a common-base configuration, converts the voltage ramp output of U416 into a current ramp.

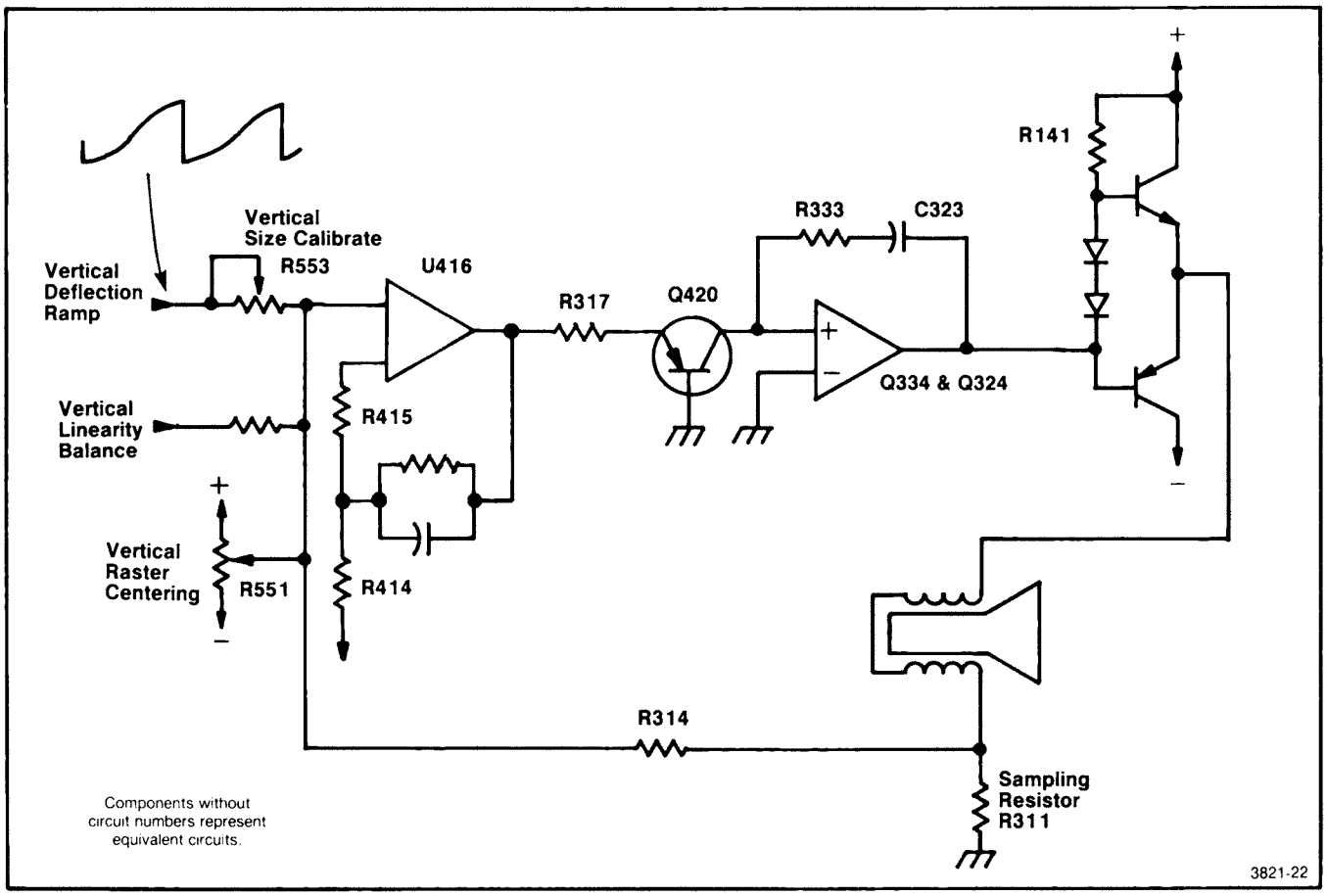

Fig. 5-10. Simplified schematic diagram of the vertical deflection amplifier.

Transistors Q324 and Q334 (wired as a Darlington pair) form an operational amplifier, which amplifies and inverts the current ramp output of Q420. Feedback resistor R333 and compensation capacitor C323 provide local feedback compensation.

Transistors Q223, Q243, Q312, and Q343 form a class B push-pull amplifier, which provides a high current output stage of amplification for the vertical deflection ramp. Darlington pair Q243 and Q343 are turned on for the positive-current half of the ramp cycle; Q223 and Q312 are turned on for the negative-current half. Diodes CR345, CR346, and CR347 match the bias voltage needed for Q312, Q343, and Q243 to insure smooth transitions between the two halves of the amplifier. Series limiting resistors R322, R342, and R350 provide short-circuit protection for the power supplies in the event of failure of one of the output transistors.

Transistors Q236, Q232, and Q130 switch the power supply for the amplifier from +15 V to +140 V during retrace. The +140 V supply provides additional voltage to enable a rapid current transition in the deflection yoke. The vertical retrace pulse is applied to the Vertical Deflection board through connector J805 pin 16. When this pulse goes high, Q236 turns on, which turns on Q232 and Q130. When Q130 turns on, the voltage at its emitter is pulled to approximately +140 V to supply the additional voltage required for retrace. At this same time, diode CR351 is reverse biased, disconnecting the +15 V supply from the amplifier. At the end of the retrace cycle, the vertical retrace pulse goes low, which turns off Q236, Q232, and Q130, and disconnects the +140 V supply from the amplifier. Then, CR351 again becomes forward biased, connecting the +15 V supply back to the circuit.

The vertical deflection yoke is tied to ground through current sampling resistor R311. The voltage across R311 is fed back to the input of operational amplifier U416 through feedback resistor R314 to maintain the overall stability of the vertical deflection amplifier.

Top and Bottom Pin and/or Tilt Amplifier

The top and bottom pin and/or tilt amplifier amplifies the top and bottom pin and/or tilt "bow-tie" signal, converts it from voltage to current, and applies the resulting current

signal to transformer T540. The current through T540 modulates the vertical deflection ramp current in the vertical deflection yoke (see Fig. 5-11) to compensate for variations in screen geometry, during off-axis sweeps. Note that the top and bottom pin and/or tilt parabolas, which have the same period as the horizontal sweep, get smaller toward the center of the vertical deflection ramp, because less geometry compensation is required at the center of the screen.

The top and bottom pin and/or tilt signal is applied to the Vertical Deflection board through connector J805 pin 3. Transistors Q637, Q730, Q727, Q747, Q731, Q639, and Q633 form a differential amplifier with a constant current source (Q633) at the emitters of Q637 and Q639. With the base of Q639 held at +6 V, the top and bottom pin and/or tilt signal applied to the base of Q637 controls the dual outputs of the amplifier. The center tap of T540 is tied to a power supply. The amplifier has two sides: an inverting side; Q637, Q730, and Q727 (active on the negative cycle); and a non-inverting side; Q639, Q731, and Q747 (active on the positive cycle). The two sides operate in a push-pull fashion, pulling current predominantly through one half of the transformer during one half of the top and bottom pin and/or tilt parabola cycle, and through the other half during the other half of the cycle. Top and Bottom Crossover Distortion adjustment R640 adjusts the current through Q633 to ensure linearity during the switching interval between the two sides of the amplifier.

Each side of the amplifier converts voltage to current to drive the transformer. Resistors R820 and R840 sample the current through the output of their respective side of the amplifier. Resistors R721 and R744, and compensation capacitors C722 and C746 feed back the sampled voltage to the inputs of their respective sides of the amplifier.

Jumper J542 allows the power supply for transformer T540 to be set for either +35 V or +15 V. The +15 V supply is used for lower horizontal scan rates to conserve power.

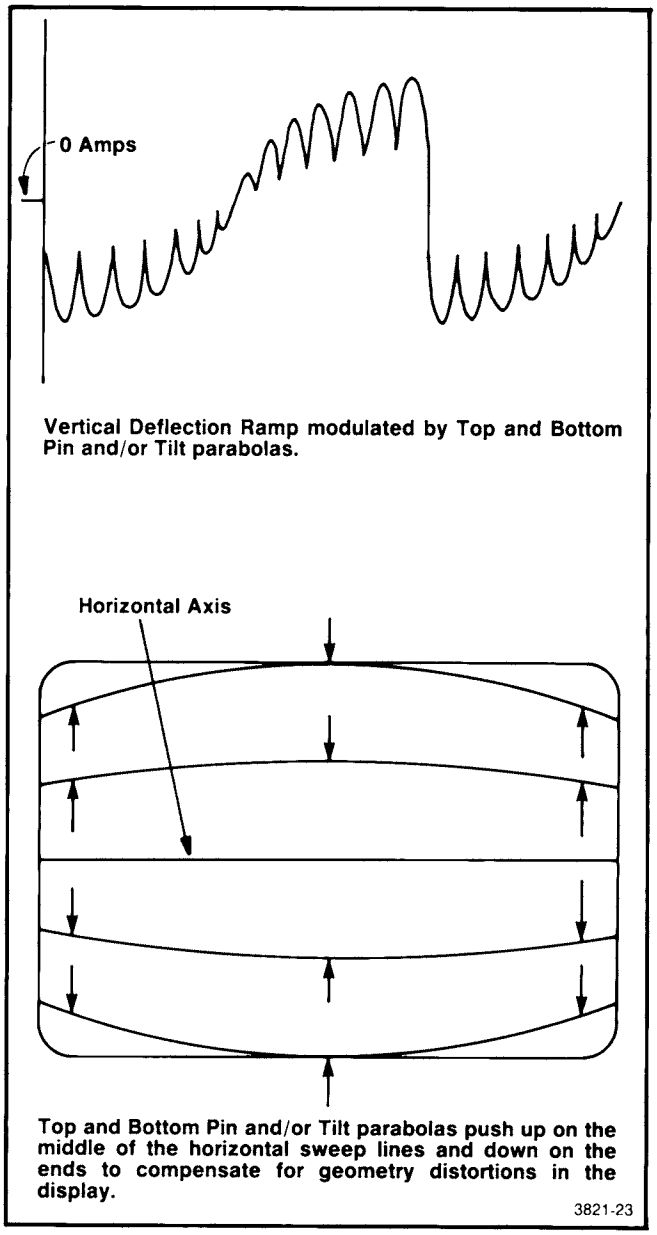

Fig. 5-11. Vertical deflection current through the vertical deflection yoke and its effect on the display.

Vertical Scan Fail

The vertical scan fail circuit controls the dc level on the vertical scan fail line. A high on this line (approximately +20 V) indicates that the current through the vertical deflection yoke is of sufficient amplitude to allow the monitor to be operated without damaging the crt. A low on the line indicates vertical scan fail, and in turn causes the high voltage supply to shut down in order to protect the crt.

Operational amplifier U210 is used as a comparator amplifier with feedback to the + side. Positive feedback causes the output of the amplifier to be either +12 V or −12 V. IC U210 compares the voltage ramp across sampling resistor R311 with a dc level set by voltage divider R113 and R211. At the beginning of the positive excursion of the ramp, the voltage at pin 3 is held at approximately +0.15 V. When the ramp voltage (at pin 2) exceeds the threshold voltage (at pin 3), the U210 output (pin 6) switches from +12 V to −12 V. The voltage on pin 3 is now held at approximately −0.15 V. When the ramp voltage at pin 2 goes below this threshold level on the negative going-excursion, the pin 6 output toggles back to +12 V.

The resulting 22 V peak-to-peak squarewave is coupled through capacitor C111 to multiplier diodes CR120 and CR121. Diode CR120 clamps the most negative excursion

of the signal at −0.6 V. Diode CR121, and capacitors C110 and C814 rectify and filter the signal, creating a dc voltage level of approximately +20 V at pin S of connector J805. This high voltage level indicates that the circuit is scanning (sweeping) correctly.

Since the output of U210 is ac coupled to the rectifier and filter network, a high on the vertical scan fail line is possible only when U210 is switching. If the ramp at pin 2 of U210 is too small to reach the threshold level set at pin 3, switching does not occur at pin 6 of U210.

There is a case during calibration of the monitor when a small vertical scan is required. When Set Up switch S726 (see Convergence Control board, A9A1) is in its Set Up position, R220 is tied to ground, which lowers the threshold level of U210 and increases its sensitivity to lower amplitude signals. The vertical sweep is thus allowed to operate in a reduced scan mode without causing a scan fail condition.

Vertical Deflection Voltage Regulator

Two regulated voltages are produced on the Vertical Deflection Amplifier board using the raw +15 V and −15 V supplies as sources. The raw supplies are regulated by U842 and U834, respectively, to produce the +12 V and −12 V supplies. These supplies are in turn filtered again to produce the +12 V1 and −12 V1 supplies.

HORIZONTAL DEFLECTION

DIAGRAMS ◈8◈ and ◈9◈

The horizontal deflection circuitry, is located on the Horizontal Deflection board, A11A1, and the Horizontal Delay Stabilizer board, A11A2. This circuitry controls the current through the horizontal deflection yoke and thus controls the horizontal position of the beam on the crt.

The horizontal deflection ramp generator circuit creates the horizontal deflection ramp, which drives the horizontal deflection yoke. Horizontal phased triggers from the interface module provide synchronization information, or the horizontal deflection ramp generator. The horizontal width control (a dc voltage level) and the side pin and/or tilt parabolas from the raster control circuitry, plus a sample of the current in the yoke, determine the amplitude of the B+ voltage supply for the horizontal deflection ramp generator circuit. The B+ supply controls the amplitude of the horizontal deflection ramp. The 'S' capacitor selection and the amplitude of the horizontal linearity ramp determine the shape of the horizontal deflection ramp.

The horizontal deflection ramp generator circuit has been designed to run at any rate from 15 kHz to 37.5 kHz. The frequency of the horizontal phased triggers determines the rate; in addition, the proper size of 'S' capacitor must be selected for a given horizontal scan rate to ensure display linearity.

The horizontal deflection circuitry also produces the horizontal retrace blanking signals, which provide timing information for the horizontal raster control circuitry. The horizontal scan fail circuit monitors the current through the horizontal deflection yoke. When the horizontal deflection amplifier fails to maintain adequate horizontal deflection, the horizontal scan fail circuit shuts down the high voltage supply to protect the crt.

Diagram ◈8◈

Horizontal Deflection Ramp Generator

The horizontal deflection ramp generator uses a resonant scan technique to create the horizontal deflection ramp (see the simplified schematic in Fig. 5-12). The circuit consists of deflection transistor Q330, feed choke T320, damper diodes CR310 and CR311, flyback capacitor C330, an 'S' capacitor, and the horizontal deflection yoke. (The size of the 'S' capacitor is selected according to the horizontal scan rate that has been chosen—see diagram 9). When operating in a stable mode, this circuit pulls current back and forth through the deflection yoke in the following sequence.

1. Transistor Q330 is turned on, the 'S' capacitor is fully charged, and the current through the yoke is zero. At this moment, the direction of current through the yoke switches from one direction to the other, as the 'S' capacitor begins discharging through the yoke and Q330.

2. Transistor Q330 is turned off. The current through the yoke now charges flyback capacitor C330. Capacitor C330 continues to charge until it has received all the residual energy from the yoke.

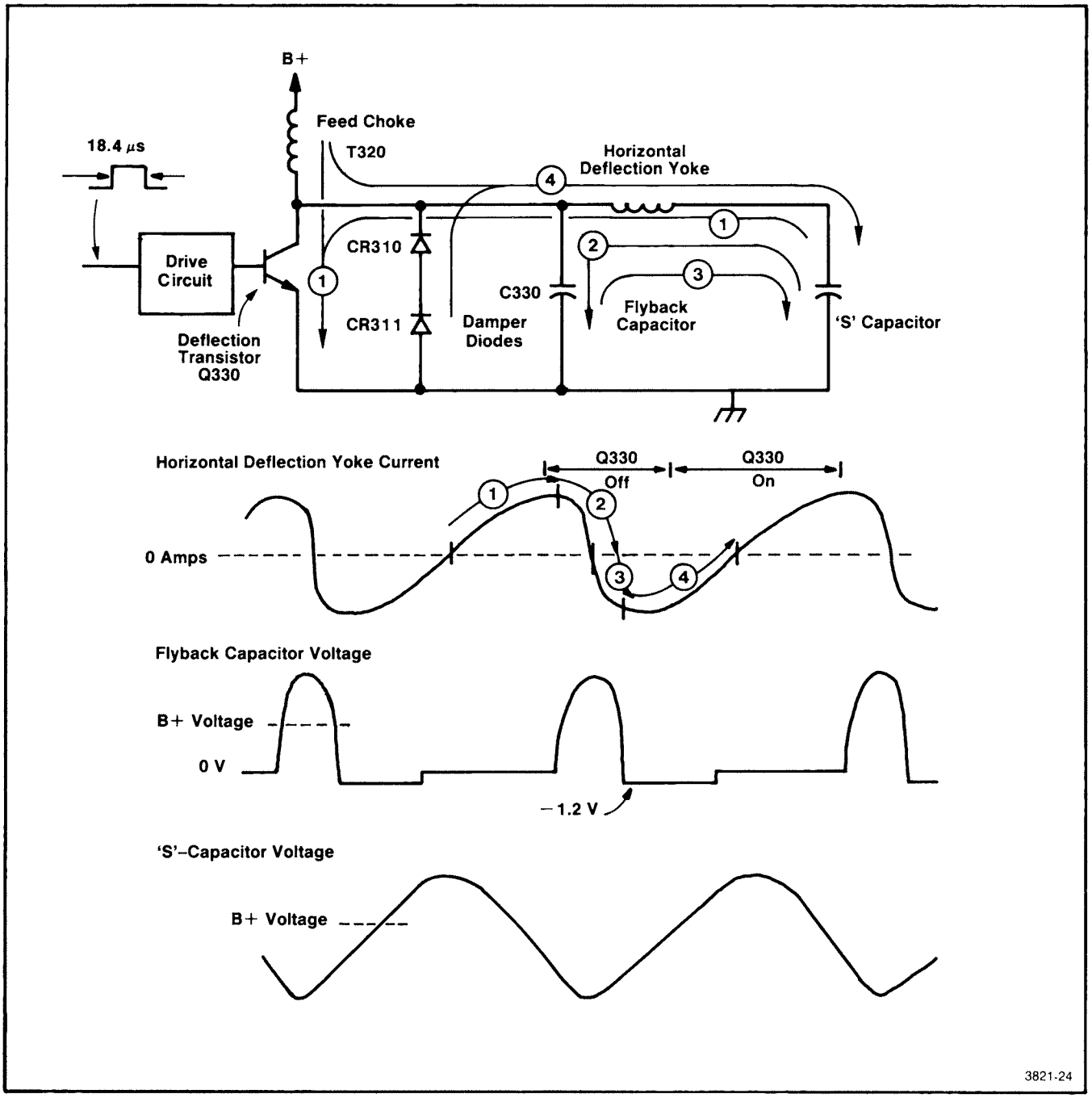

Fig. 5-12. Resonant scan sequence in the horizontal deflection ramp generator.

3. The current in the yoke now reverses and C330 begins recharging the 'S' capacitor.

4. When the potential across C330 goes below zero volts, damping diodes CR310 and CR311 clamp the voltage at the cathode of CR310 at −1.2 V. The 'S' capacitor continues to charge through the damping diodes and feed choke T320. When Q330 is again turned on, the damper diodes are reverse biased and current from the feed choke is diverted into Q330. The 'S' capacitor continues to charge until it has received all the residual energy from the yoke.

5. At this moment, current in the yoke reverses and the fully charged 'S' capacitor again begins discharging through the yoke and Q330.

From this resonant scan sequence, it can be observed that the rate of rise, frequency, and shape of the horizontal deflection ramp is varied in three ways: the level of the B+ supply voltage; the rate at which Q330 is turned on and off; and the size of the 'S' capacitor.

The following discussion describes how these elements of the resonant-scan, horizontal deflection ramp generator are controlled in order to provide linear displays over a wide range of horizontal scan rates.

B+ Supply

The B+ supply consists of two circuits: B+ supply reference and B+ supply amplifier. It operates in conjunction with the 'S' capacitor to determine the rate of rise (and thus the amplitude) of the horizontal deflection ramp. The voltage level of the B+ supply is varied to compensate both for changes in scan rate and variations in screen geometry. One signal and three dc levels affect the output of the B+ supply.

1. The side pin and/or tilt parabola signal.

2. The dc level of the horizontal width control line.

3. A voltage level that represents the actual peak output current conducted through the yoke.

4. The choice of the power supply voltage for the B+ supply amplifier.

B+ Supply Reference. The B+ supply reference circuit (made up of the horizontal width control-side pin and/or tilt amplifier U730B, and the error amplifier U940B—see Fig. 5-13) creates a −dc level that the B+ supply amplifier uses as a reference for its output. The level of the horizontal width control and the side pin and/or tilt signal (both generated in the raster control circuitry) are applied to the Horizontal Deflection board through connector P810 pins R and A, respectively. The horizontal width control voltage level is proportional to the current level in the yoke required to move the beam from the center of the screen to the side along the horizontal axis. It thus represents the nominal peak current through the yoke. Differential amplifier U730B (see Fig. 5-14) produces a voltage level at its pin 7 output

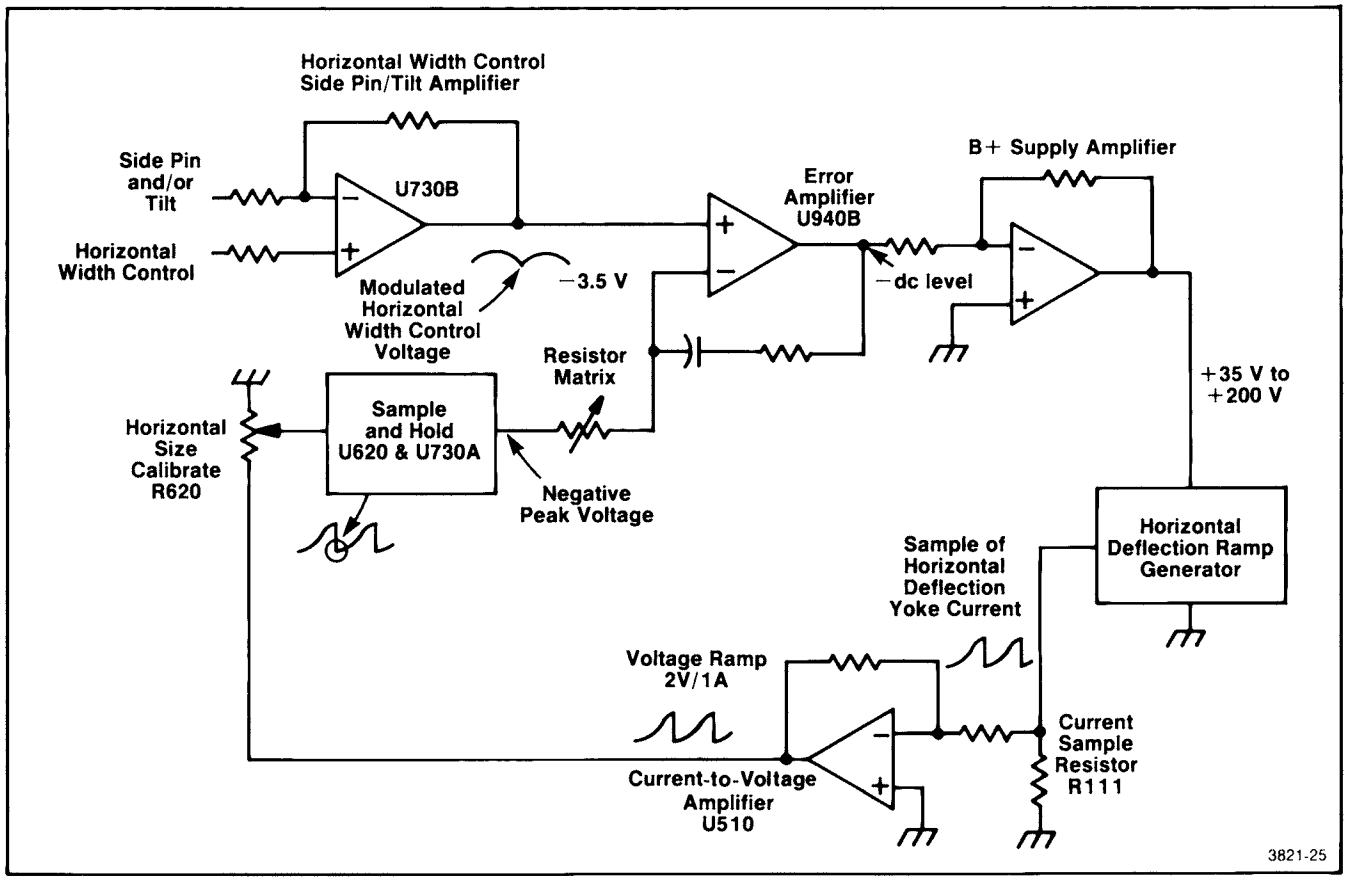

Fig. 5-13. Simplified schematic of the horizontal deflection ramp amplifier control circuitry.

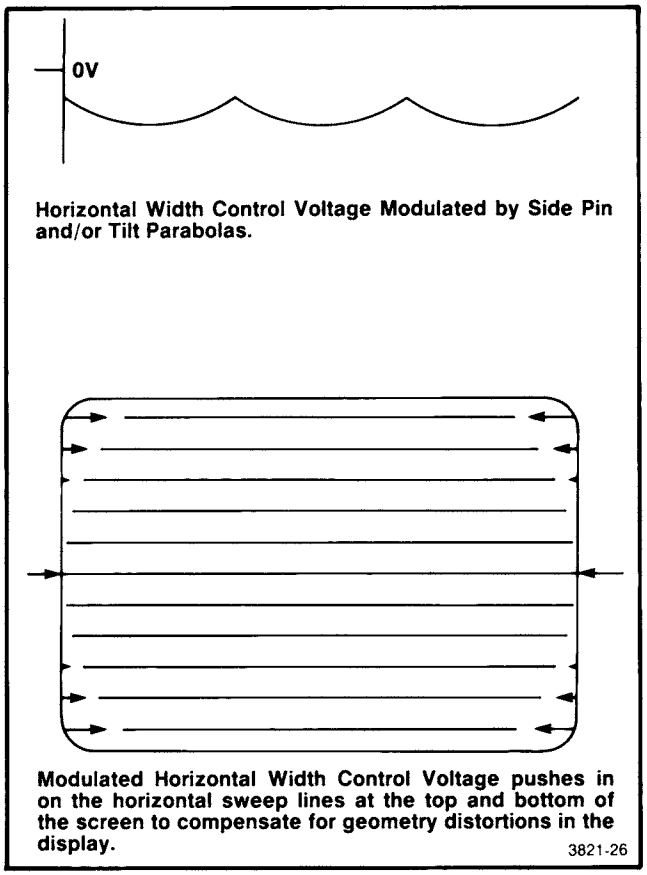

Horizontal Width Control Voltage Modulated by Side Pin and/or Tilt Parabolas.

Modulated Horizontal Width Control Voltage pushes in on the horizontal sweep lines at the top and bottom of the screen to compensate for geometry distortions in the display. 3821-26

Fig. 5-14. Effect of modulated horizontal width control voltage on the display.

that is equal to the horizontal width control voltage (at pin 5) minus one-fifth of the side pin and/or tilt signal (at pin 6). The peak current in the horizontal deflection yoke thus decreases the farther the horizontal scan is from the vertical center of the screen.

Transistor Q740 performs a settling function if the horizontal deflection ramp generator becomes unlocked with respect to the horizontal phased trigger signal (see the discussion later in this section on the delay stabilization circuit). When this unlocked condition occurs, the delay stabilizer lock line, which is applied to the B+ reference circuit through pin 5 of P141, is pulled high. The resulting low at the collector of Q740 raises the B+ reference level at the pin 7 output of U730B, which in turn forces the B+ supply amplifier output down to its +34 V lower limit (see the following discussion of the B+ supply amplifier). The B+ supply voltage is held at +34 V until the horizontal deflection ramp generator stabilizes, at which time the delay stabilization lock line is pulled low and Q740 relinquishes control of the pin 6 input to U730B.

Error amplifier U940B compares the modulated horizontal width control level (at pin 5) with a voltage level (at pin 6) that represents the actual negative peak level of the horizontal deflection ramp. (See the description of the current sampling circuit later in this section.) Since the actual voltage is applied to the inverting input of the amplifier, U940B inverts the error voltage: if the voltage at pin 6 of U940B is more negative than the voltage at pin 5 (the peak current in the horizontal deflection yoke is too high), the output voltage at pin 7 is raised, and vice versa.

B+ Supply Amplifier The B+ supply amplifier inverts and amplifies the error voltage at the output of the B+ supply reference circuit (TP846) to produce the B+ supply voltage. A feedback amplifier is formed by U940A, Q930, Q931, and Q920, with R844 and R823 as the input and feedback resistors, respectively. Integrated circuit U940A provides a large open loop gain for the amplifier. Transistor Q930, wired as a common-base amplifier, converts the amplified, non-inverted error signal voltage at the pin 1 output of U940A into current to drive Q931. As the current through Q930 increases, Q931 turns on more, pulling up on the base of Q920 and increasing the B+ supply voltage.

Jumper J720 allows the supply voltage for the B+ supply to be selected as +200 V, +140 V or +80 V. The higher the voltage selected for the power supply, the higher the range of the B+ supply and thus the higher the allowable horizontal scan rate.

Diode CR720 limits the minimum level of the B+ supply to +34 V during initial start-up or delay stabilize lockout. Fast blow fuse F820 limits the B+ supply current to 0.75 A.

The H Yoke Interlock shorting strap, which is part of the horizontal deflection yoke connecting hardware, ensures that the B+ supply is disconnected from the deflection transistor when the yoke is disconnected from the horizontal deflection ramp generator circuit and removed from service.

Deflection Transistor Drive

The deflection transistor drive circuit controls the turning on and off of the deflection transistor, Q330. The horizontal drive signal and the flyback protection circuit output control the timing of the circuit. The horizontal drive signal is applied to the Horizontal Deflection board through connector J141 pin 1. These negative-going edges, which come from the Horizontal Delay Stabilizer board, are derived from the horizontal phased trigger signal.

The inputs to U530C (used as an inverted NOR gate) are normally high. A horizontal drive trigger at pin 9 or a negative-going edge from the flyback protection circuit at pin 10, whichever occurs first, raises the pin 8 output and triggers one-shot U630B. Then, U630B produces an 18.4 μs wide,

positive-going pulse at pin 5 that determines the maximum turn-off time of Q330.

This turn-off pulse is ac-coupled through C740 to the base of Q441. When the turn-off pulse goes high, Q441 is turned on, which turns off Q442 and turns on Q440. When Q440 turns on, it pulls down on the base of deflection transistor Q330, causing it to begin conducting approximately 0.6 A of reverse biased emitter-base current. In this mode, Q330 requires from 4 μs to 11 μs to turn off. After Q330 has turned off, the emitter-base current goes to zero and remains there for the remainder of the turn-off interval.

At the end of 18.4 μs, the turn-off pulse goes low, Q441 and Q440 are turned off, and Q442 is turned on. Then, Q442 pulls up on the base of Q330, which turns Q330 on and causes it to conduct approximately 1 A of forward-bias, base-emitter current.

This turn-off cycle is repeated for each horizontal drive trigger. If the period between horizontal drive trigger becomes too long (see the following discussion of the flyback protection circuit), the output of the flyback protection circuit pulls pin 10 low and initiates the turn-off cycle.

Transistors Q240 and Q346 provide an alternate voltage source for Q440 in the event that the −8 V supply is lost. If the −8 V supply at the base of Q240 were to open or be shorted to ground, the emitter of Q240 would be raised to 0 V. Then, Q240 turns on, which turns on Q346 and causes its collector to be pulled to −15 V. This back-up supply assures that Q440 is always available to turn off Q330. If Q440 is disabled, Q330 will turn off late, creating an oversized flyback pulse that will in turn destroy Q330.

Flyback Protection

During flyback (see the discussion of the horizontal deflection ramp generator) the yoke current causes a very large voltage (typically 1200 V) to build up on the flyback capacitor, C330. If the yoke current is allowed to become too large before flyback occurs, this flyback voltage will exceed the maximum allowable Vce of deflection transistor Q330 and destroy it. The flyback protection circuit compares the rate of rise of the horizontal deflection ramp with the yoke current. If the yoke current begins to approach a level that is sufficient to cause a flyback pulse large enough to damage Q330, a trigger is generated at pin 10 of U530C that initiates the turn-off of Q330.

The B+ supply voltage is applied to the flyback protection circuit through High Horizontal Rate adjustment R724. The attenuated B+ supply then drives the base of transistor Q720, causing a voltage at test point TP720 that is inversely proportional to the B+ voltage: if the B+ supply voltage goes up, the voltage at the collector of Q720 goes down, and vice versa.

Comparator U511 compares the converted B+ supply level (which represents the rate of rise of the horizontal deflection ramp) with a voltage signal from the current sample amplifier that is proportional to the yoke current. The pin 7 output of U511 is nominally at +5 V. When the voltage at input pin 3 becomes greater than the voltage at pin 2, U511 switches its output low, causing a negative-going edge at pin 10 of U530C. High Horizontal Rate readjustment R724 and Low Horizontal Rate adjustment R723 allow the switching level to be set for a peak deflection current of 3.4 A. The flyback pulse is thus limited for all ramp rise rates to approximately 1400 V.

Transistor Q721 provides added flyback protection in cases where the B+ supply has been lowered to +34 V and is beginning to be raised up again. Any lowering of the B+ supply voltage is accompanied by a rise in the error voltage at TP846. When the TP846 voltage rises above 0 V, CR940 is forward biased, charging C930 and turning on Q721. With Q721 saturated, R722 is in effect connected in parallel with R720 and R723, which lowers the threshold voltage required to cause turn-off of deflection transistor Q330. As the B+ supply begins to come back up, the charge on C930 keeps Q721 turned on for a short time and holds the threshold voltage at pin 2 of U511 below its normal operating level. This delay allows the B+ supply time to stabilize before the flyback protection circuit is returned to normal operation.

Diode CR609, and resistor R609 protect comparator U511. If Q720 shorts to the +200 V supply, CR609 clamps pin 2 of U511 to +15 V and R609 (a carbon composition fuse-resistor) burns up, breaking the path to the supply.

Horizontal Retrace Timing

The flyback pulse at TP320 controls the timing of the horizontal retrace and horizontal retrace blanking pulses. Diode CR320 clips the amplitude of the flyback pulse to +200 V. Then, C421 couples this pulse through to divider R410 and R411 to clamping diodes CR510, CR410 and CR511. These diodes further clip the pulse, yielding a pulse amplitude of approximately 6.0 V, which is coupled through emitter follower Q510 to produce the horizontal retrace blanking pulse.

The horizontal retrace blanking pulse is distributed to three places: single-ended differential line driver U520, J810 pin B, and the flip-flop input at pin 1 of U530A. Integrated circuit U520 produces a pair of differential TTL horizontal retrace pulses, which are applied to J810 pins 15 and S.

Current-to-Voltage Amplifier

Current sampling amplifier U510 (see Fig. 5-13) samples the current conducted through the yoke, and converts the sampled current into voltage. Transformer T111 provides a small sample of the horizontal deflection ramp current signal. This current signal is then conducted through current sampling resistor R111. Operational amplifier U510 amplifies the voltage signal across R111 by approximately eleven times. The resulting voltage signal is proportional to the horizontal deflection yoke current by a ratio of 2 V/1 A. This voltage signal is applied to the flyback protection circuit and to sample-and-hold amplifier U620.

Yoke Current Sample-and-Hold

The yoke current sample-and-hold circuit picks off the negative peak-voltage from the current-to-voltage amplifier output, which occurs at the end of retrace. (This voltage represents the peak current of the horizontal deflection ramp.) This peak voltage is then compared with the desired peak current level (horizontal width control level minus the side pin and/or tilt signal) to determine the error voltage to be applied to the B+ supply amplifier.

Set-reset flip-flop U530A and U530B, and one-shot U630A produce the sample pulse, which indicates when sample-and-hold amplifier U620 is to sample the voltage signal. Pins 1 and 2 of U530A (used as an inverted input NOR gate) are normally held high. When the horizontal retrace pulse at TP520 makes its negative-going transition, pin 1 of U530A is pulled low, causing a rising edge at the pin 3 output. The falling edge of the horizontal retrace pulse indicates the end of retrace and thus occurs at the most negative peak of the horizontal deflection ramp. The rising edge at the pin 2 input to U630A produces an 800 ns positive-going pulse at output pin 13. Transistor Q630 converts this sample pulse into an 800 ns wide current sample pulse at pin 5 of U620.

Integrated circuit U530B (also used as an inverted input NOR gate) locks out flyback pulses with amplitudes below approximately 500 V. The flyback pulse at pin 5 of feed choke T320 is about 2% of the amplitude of the flyback pulse at test point TP320. This attenuated flyback pulse is coupled through C412 to the divider network made up of R409 and R520, and VR420. Diode CR421 and the divider clip the attenuated flyback pulse to 10 V peak-to-peak with the baseline of the pulse at −5 V dc. Inverter U530D inverts this pulse and applies it to pin 5 of U530B. Prior to retrace, pin 3 of U530A is high, causing pin 4 of U530B to be high. With pins 4 and 5 of U530B high, its output is low, causing a low on pin 2 of U530A. In this state, U530A is disabled from passing the negative-edge required to create the sample pulse.

When the flyback pulse at pin 5 of U530B goes low, pin 2 of U530A is pulled high, enabling the gate. If, however, the flyback pulse is too small to cause pin 5 to reach its low logic state, pin 2 remains high and blocks the falling edge of the horizontal retrace pulse from triggering one-shot U630A. When the horizontal deflection ramp generator is starting up, the peak ramp current swings high and low from cycle to cycle until it stabilizes. To insure final stabilization, U530B allows samples of peak current to be taken only on the larger peaks.

The voltage signal from U510 and the sample pulse from Q630 are applied to sample-and-hold amplifier U620. Horizontal Size Calibrate adjustment R620 sets the overall gain of the horizontal ramp generator. Integrated circuit U620 operates in a non-inverting emitter-follower mode, providing a voltage gain of one. When the sample pulse at pin 5 of U620 goes high, U620 is turned on and C621 is charged to the level at the pin 3 input of U620, which is the negative peak of the horizontal deflection ramp.

Operational amplifier U730A, which is also used in a non-inverting, emitter-follower mode, provides a buffer between holding capacitor C621 and the resistor matrix, R830 through R837, R841 and R842, and switch U830.

The resistor matrix is the input resistor for error amplifier U940B. For stable, non-oscillating operation of the horizontal deflection ramp generator, the input resistance must be changed for different ramp frequencies. Analog switch U830 changes the resistance according to the selection of the 'S' capacitors (see the discussion of the horizontal linearity balance circuit later in this section). Pin P840 allows the input to the error amplifier to be grounded through a 75 Ω resistor for the purpose of testing the flyback voltage limit.

Horizontal Scan Fail

The horizontal scan fail circuit controls the dc level of the horizontal scan fail line. A low on this line (approximately 0 V) indicates that the current amplitude is sufficient to allow the monitor to be operated without damaging the crt. A high on the line (approximately +6 V) indicates horizontal scan fail—too small a horizontal deflection ramp—and causes the high voltage supply to shut down in order to protect the crt.

The output of current sampling amplifier U510 is applied through half-wave rectifying diode CR610 to filter capacitor C614. Zener diode VR611 sets the voltage across C614 that is required to turn on Q610 at approximately +3.5 V. If the positive-peak amplitude of the current sample voltage at

pin 6 of U510 remains at or above +3.5 V, Q610 remains on and the horizontal scan fail line is held low. If the current sample voltage goes below +3.5 V peak, indicating reduced current in the horizontal deflection yoke, Q610 turns off and the horizontal scan fail line goes high.

DIAGRAM 9

Horizontal Raster Centering

The horizontal raster centering circuit (see Fig. 5-15) inserts an adjustable dc current into the horizontal deflection yoke. This dc current allows the raster to be centered horizontally on the crt screen.

Operational amplifier U230, Q230, and Q210 produce the horizontal centering current. The +10 V and −10 V floating power supplies provide current for the circuit. Note that since the supplies are floating, the circuit operates independent of changes in the B+ supply voltage. Horizontal Raster Centering adjustment R149 sets the reference voltage for the amplifier. The bases of Q210 and Q230 are connected to the negative and positive supply inputs to U230, respectively. The transistors are driven in a class-B push-pull manner. If the horizontal raster centering voltage is raised, the pin 6 output of U230 is pulled down, causing a need for more current to be conducted through the pin 4 negative supply input. This current turns on Q210 and causes current to be conducted through the horizontal deflection yoke and into Q210. If the horizontal raster centering voltage is lowered, Q230 is turned on and current is conducted in the reverse direction through the yoke. The current in this circuit is returned to the floating supply's common ground through current sampling resistor R243. The voltage across R243 is fed back through feedback resistor R230 to pin 2 of U230 for output stabilization. Horizontal Raster Centering adjustment R149 provides a dc current range of approximately ±0.2 A.

Feed chokes L110 and T320 block the ac voltage across the 'S' capacitor and flyback capacitor C330 from affecting the horizontal centering circuit. Capacitor C124 with R110 and L110 provide local frequency response compensation for the horizontal deflection ramp generator.

'S' Capacitors

The 'S' capacitors control the curvature of the horizontal deflection ramp: in general, the smaller the capacitor, for a given sweep rate, the greater the curvature of the ramp; the larger the capacitor, the straighter the ramp. Too small a capacitor causes spreading of the horizontal sweep toward the center of the screen and the eventual overlap of the horizontal sweep at the sides of the screen; too large a capacitor causes spreading of the sweep at the sides of the screen. The affect of the 'S' capacitor changes with the rate of the horizontal sweep: the faster the sweep rate, the smaller the capacitance required to produce a linear display.

Jumpers J105, J205, J405, and J505 select the 'S' capacitor, allowing a linear display to be obtained over a wide range of sweep rates. The Adjustment Procedure gives instructions for setting the jumpers for the desired sweep rate.

Horizontal Linearity Balance

The horizontal linearity balance circuit compensates for resistance losses in the horizontal deflection yoke. These losses cause drooping of the horizontal deflection ramp, and thus non-linearity in the display (see Fig. 5-16).

The negative-going horizontal ramp signal from the raster control circuitry is applied to the Horizontal Deflection board through P810 pin H. Operational amplifier U141 amplifies and inverts the ramp. Input resistors R739, R744, R735, R734, and R743, and feedback resistors R143 and Horizontal Linearity adjustment R144, control the gain of the amplifier. Analog switch U830 selects the input resistance according to the selection of the 'S' capacitors (see the discussion of U830 in the following paragraphs); the Horizontal Linearity adjustment sets the overall gain of the amplifier.

Transistors Q131, Q121, Q132, and Q133, which form a class-B, push-pull amplifier, provide current amplification of the U141 output. The resulting horizontal linearity balance ramp from this amplifier drives T110, which is connected in series with the horizontal deflection yoke. The horizontal linearity balance ramp signal boosts the voltage across the yoke and thus compensates for any 'R' losses in the circuit.

Integrated circuit U830 selects resistors both for the input to amplifier U141 and for the input resistance to error amplifier U940B (see the discussion of the current sampling circuit). The switch uses three inputs to create five resistors as shown in Table 5-1.

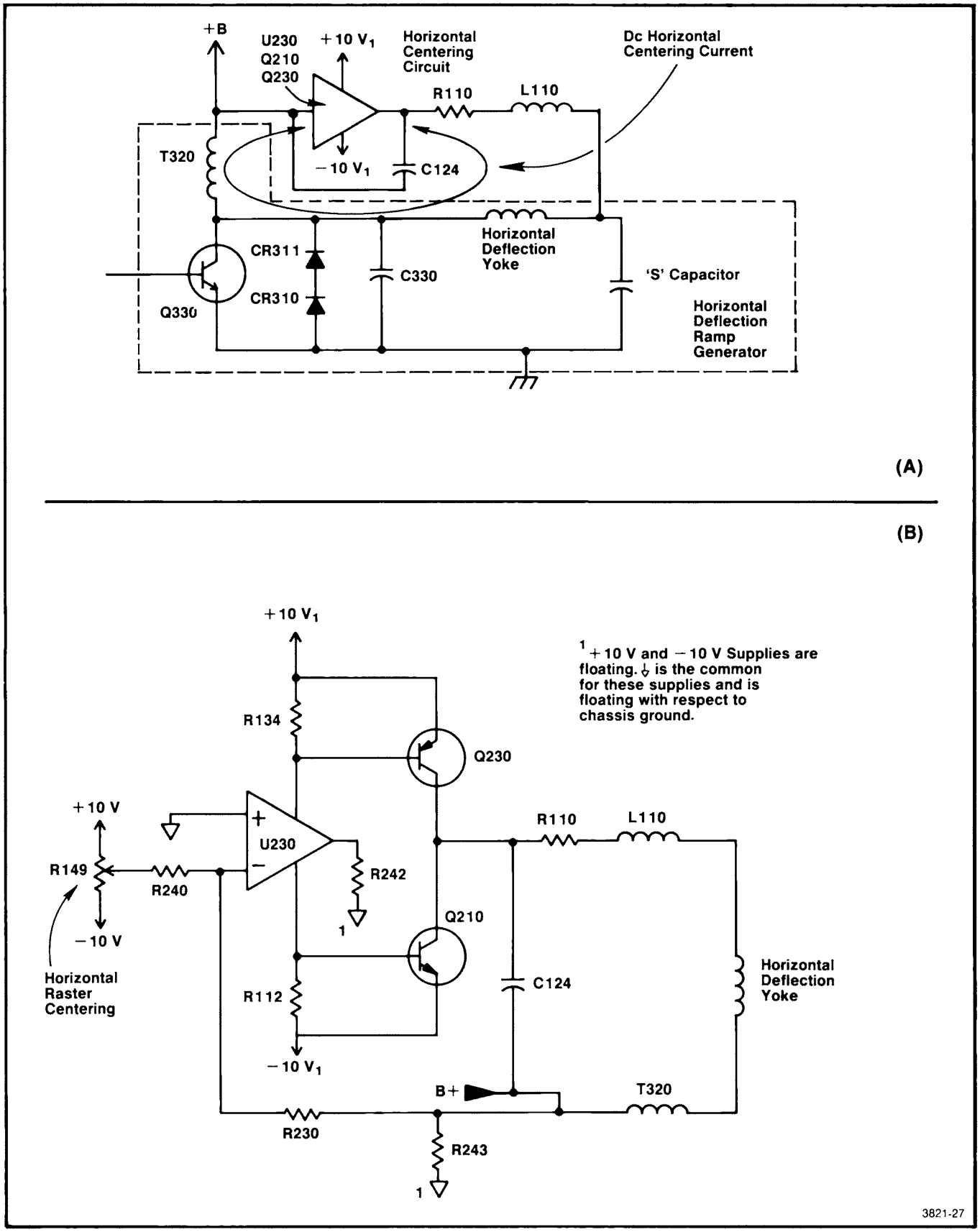

Fig. 5-15. Horizontal centering circuit: (A) Relationship of circuit to horizontal deflection ramp circuits; (B) simplified schematic of circuit.

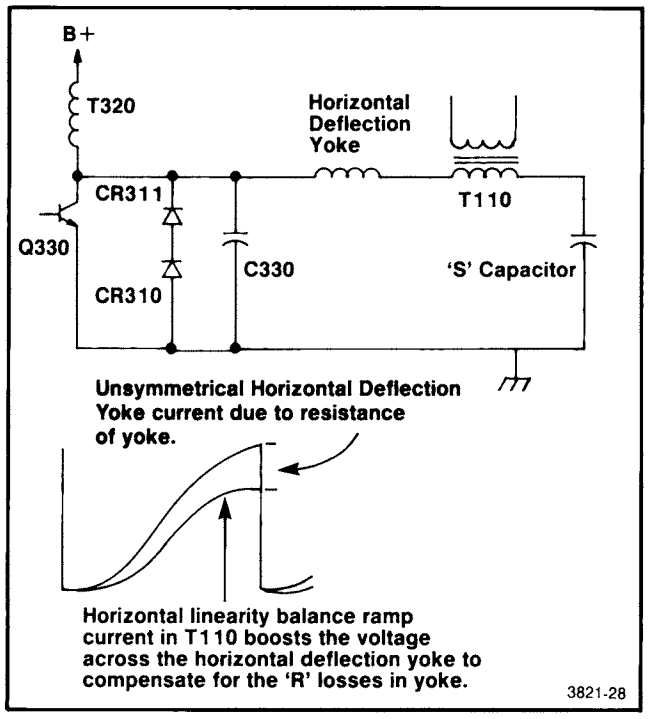

Fig. 5-16. Effects of horizontal linearity balance circuit on horizontal deflection yoke current.

Transistor Q528 selects the lowest bandwidth state for U141 when an unstable condition is obtained (see the discussion of the delay stabilizer circuit). When the delay stabilizer lock signal goes high, indicating an unstable condition, Q528 is turned on. The resulting low at the collector of Q528 turns off Q515, causing a high at the Rs (Inhibit) input of U830. This high selects R834 + 5.9 kΩ (R730 + R837 = 5.9 kΩ) as the input resistor to error amplifier U940B, which selects the most overdamped state for the circuit. This selection is accompanied by the pulling down of the B+ supply voltage to +34 V until the circuit stabilizes.

Horizontal Delay Stabilizer

The horizontal delay stabilizer circuit creates the horizontal drive signal, which controls the deflection transistor in the horizontal deflection ramp generator and ultimately sets the sweep rate of the horizontal deflection ramp.

The horizontal drive pulse occurs some time between the horizontal phased trigger and the rising edge of the horizontal retrace pulse (see Fig. 5-17). The horizontal delay stabilizer circuit automatically adjusts the time of the horizontal drive pulse with respect to the horizontal phased trigger to time lock the interval between the horizontal phased trigger and the horizontal retrace pulse to 13 μs. This automatic time locking circuit compensates for: the response time of the deflection transistor, Q330; temperature changes; and variations in the B+ supply voltage due to side pin and/or tilt correction.

Table 5-1
RESISTANCE SELECTION THROUGH ANALOG SWITCH U830

'S' Capacitor			Inputs to U830			R_{in} to U141	R_{in} to U940B
D	C	B	Rb	Ra	Rs		
0	0	0	1	1	0	R744//R739	R836//R834 + 5.9 kΩ
0	0	1	0	0	0	R743//R739	R831//R834 + 5.9 kΩ
0	1	X	1	0	0	R735//R739	R832//R834 + 5.9 kΩ
1	0	X	0	1	0	R734//R739	R835//R834 + 5.9 kΩ
1	1	X	0	0	1	R739	R834 + 5.9 kΩ

1 = high or jumper in place to select capacitor

0 = low or jumper in place to not use capacitor

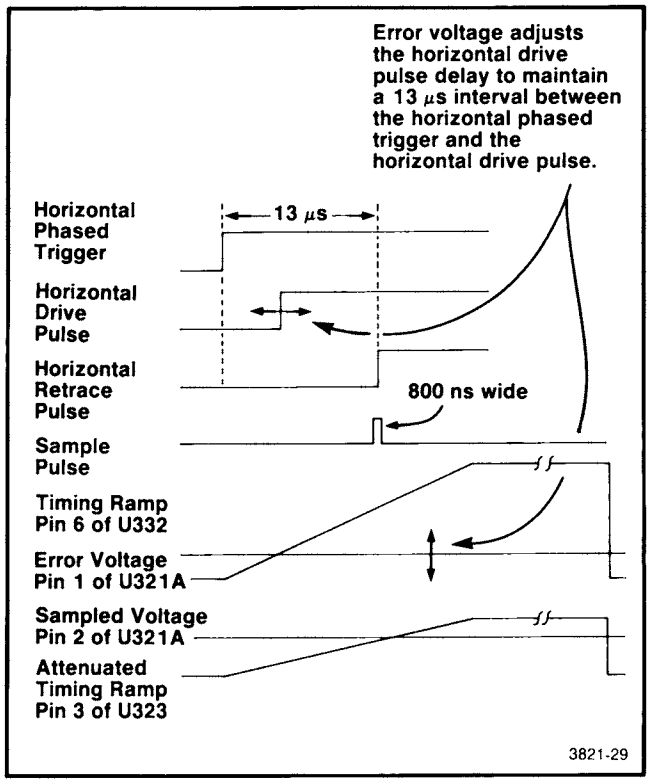

Fig. 5-17. Timing for delay stabilization circuit.

The differential TTL horizontal phased trigger signals from the interface module are applied to the Horizontal Delay Stabilizer board through P142 pins 10 and 9. (The horizontal phased trigger signal is applied to the monitor through the interface module.) Differential line receiver U124A converts the pair of horizontal phased triggers into a negative-going edge. This negative-going edge is then coupled through C124 to one-shot U232. When triggered with the falling edge, U232 produces a 25 μs wide, negative-going ramp enable pulse at its pin 1 (inverted) output. This pulse controls switching transistor Q332.

Operational amplifier U332 produces a linear, positive-going, timing ramp; VR437 and Horizontal Retrace Delay adjustment R436 determine the rate of rise of the ramp. When the pin 1 output of U232 is high, Q332 is turned on and the pin 6 output of U332 is held at 0 V. When the horizontal phased trigger occurs, the ramp enable pulse goes low, Q332 is turned off, and the timing ramp at pin 6 of U332 begins rising. The ramp rises until it reaches the +15 V power supply limit and remains there until the ramp enable pulse goes high and again turns on Q332. Zener diode, VR335 (added SN B010410 and up), prevents U332 from going into saturation by limiting the ramp at pin 6 to 11 V.

The rate of rise of this ramp is used as a clock; the voltage level of the ramp at a given time is proportional to the time that has elapsed since the occurrence of the horizontal phased trigger. The ramp is applied to comparator U427, which creates the horizontal drive pulse, and to sample-and-hold amplifier U323 to determine the time interval between the horizontal phased trigger and the horizontal retrace pulse.

The differential TTL horizontal retrace pulses are applied to the Horizontal Delay Stabilizer board through P142 pins 3 and 4. (Note that the horizontal retrace pulses are coincident with the horizontal retrace blanking pulse.) Differential line receiver U124B converts the pair of horizontal retrace pulses into a positive-going edge, which is fed to one-shot U215. When triggered with the rising edge, U215 produces an 800 ns wide sampling pulse—positive-going at pin 6 and negative-going at pin 1. The positive-going sample pulse is coupled through Q221 to pin 5 of U323.

Resistors R426 and R427 attenuate the timing ramp from U332 pin 6 and apply it to the pin 3 input of U323. When the sample pulse at the emitter of Q221 goes high, current is conducted through pin 5 of U323, causing the voltage at pin 3 to be sampled. The voltage sample at the pin 6 output of U323 charges holding capacitor C328. Operational amplifier U321B acts as a buffer between the voltage on C328 and error amplifier U321A. The voltage sample at pin 2 of U321A is proportional to the time interval between the horizontal phased trigger and the horizontal retrace pulse.

Integrated circuit U321A compares the voltage sample with a reference voltage set by VR315. This reference voltage is the level required to obtain a 13 μs interval between the horizontal phased trigger and the horizontal retrace pulse. The error voltage, which is the reference voltage minus the voltage sample times the gain of U321B, appears at the pin 1 output. Capacitors C322 and C420 and resistors R321 and R322 control the rate of change of the error voltage at the pin 1 output, limiting it to approximately 0.2 ms.

Diode clamp CR414 and CR421 limit the range of the error amplifier output to between +1 V and +7 V, respectively.

Comparator U427 compares the ramp output of U332 at input pin 3 with the error voltage at input pin 2. When the ramp voltage reaches the error voltage, pin 7 of U427 goes low, creating the negative-going horizontal drive edge.

The level of the pin 1 output of U321A thus determines the time that turn-off of the deflection transistor is initiated. If, for example, the sampled voltage at pin 2 of U321 is greater than the reference voltage (indicating a time interval between the horizontal trigger and the horizontal retrace pulse that is greater than 13 μs), the U321B output voltage is lowered. The time interval between the horizontal phased trigger and the horizontal drive pulse is thus reduced, which

causes the transistor to turn off sooner and reduce the interval between the horizontal phased trigger and the horizontal retrace pulse. Vice versa, if the sample voltage is less than the reference voltage (indicating a time interval less than 13 μs), the U321 output is raised. The delay between the horizontal phased trigger and the horizontal drive pulse is thus increased, causing the transistor to turn off later and increase the interval between the horizontal phased trigger and the horizontal retrace pulse.

Horizontal Retrace Delay adjustment R436 matches the slope of the timing ramp with the VR315 reference voltage, allowing the time-lock interval between the horizontal phased trigger and the horizontal retrace pulse to be calibrated to exactly 13 μs. Figure 5-18 shows the typical error voltage at pin 1 of U321A. Since the horizontal delay stabilizer circuit compensates for changes in the B+ supply, which is modulated by the side pin and/or tilt parabola, the error voltage under normal conditions is also a parabola.

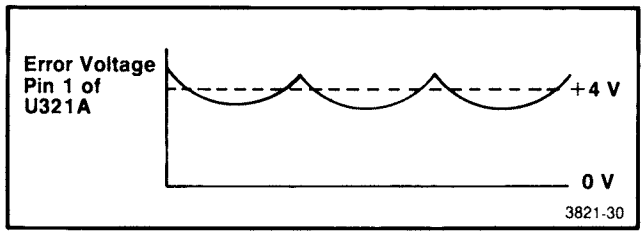

Fig. 5-18. Error voltage parabola at pin 1 of U321A.

Free-Run Horizontal Phased Trigger Generator. Q322, Q323 (added SN B010410 and up), and programmable unijunction transistor Q331 form a free-running trigger generator, which provides an internal source of horizontal phased triggers. When pin 6 of U232 is low, Q322 is turned off and C231 is allowed to charge. When the externally applied horizontal phased trigger arrives, pin 6 of U232 is pulled high, which turns on Q322 and discharges C231. If the external horizontal phased trigger fails to arrive, the charge on C231 eventually goes high enough to turn on Q331. When Q331 turns on, Q323 turns on and causes Q322 to turn on. As a result, C231 discharges rapidly, creating a negative-going trigger pulse. This pulse is coupled through capacitor C230 to the pin 4 input to U232, where it triggers the ramp enable pulse.

Resistors R231, R232, R233, and R405 determine the charge rate of C231 and thus the free-run rate of the internal horizontal phased trigger generator. There are five rates available, selected automatically when the 'S' capacitor jumpers are set. The smaller the 'S' capacitor selected, the faster the free-run rate.

Delay Stabilizer Lock

If the horizontal deflection ramp becomes unlocked with respect to the externally applied horizontal phased trigger signal, the delay stabilizer lock circuit pulls the delay stabilizer lock line high. When this line is pulled high, a number of events take place, which force the horizontal deflection ramp generator into a more stable state until synchronization is again obtained. The following events occur.

1. The B+ supply voltage is reduced to +34 V.

2. The input resistance to error amplifier U940B in the B+ supply reference circuit is increased to the maximum.

3. The gain of the horizontal linearity balance circuit is reduced to its minimum (a result of event 2).

The unlocked condition is detected in three ways: ambiguity between the number of horizontal phased triggers and the number of horizontal retrace pulses; the absence of a horizontal retrace pulse; and a swing in the error voltage at pin 1 of U321A above +7 V.

J-K flip-flops U217A and U217B detect the condition where there are two or more horizontal retrace pulses for each horizontal phased trigger. The negative-going sample pulse, which is coincident with the horizontal retrace pulse, is fed to the clock input (pin 1) of U217A. The ramp enable pulse, which is coincident with the horizontal phased trigger, is applied to the clear inputs of U217A and U217B, pins 2 and 6, respectively. For normal operation, the horizontal phased trigger clears the flip-flops after each horizontal retrace pulse. If two or more horizontal retrace pulses occur before the flip-flops are cleared, however, pin 9 of U217B is raised. This high at pin 9 of U217B turns on Q223, pulling the pin 2 input to error amplifier U321A low. The low on pin 2 raises the pin 1 output of U321A to above +7 V.

Zener diode VR413 sets the voltage at the base of Q316 at +7 V. When the output of the error amplifier goes above +7.6 V, Q316 is turned on and the delay stabilizer lock line is pulled high.

The loss of the horizontal retrace pulse causes the same result. With no sample pulse at pin 5 of U323, C328 discharges, causing a low at pin 2 of U321A. This low then causes the delay stabilizer lock line to go high.

If, in the process of synchronizing the horizontal deflection ramp with the horizontal phased trigger signal, error amplifier U321A's output goes above +7 V, the delay stabilizer lock line is likewise pulled low.

When the delay stabilizer lock line is pulled low, CR428 and filter capacitor C429 hold Q528 on for approximately 4 ms, regardless of the error voltage at pin 1 of U321A, until the horizontal deflection ramp generator circuit has had a chance to stabilize. Capacitor C930 and Q721 in the flyback protection circuit perform a similar delaying function.

For test purposes, P325 is placed between J325 pins 2 and 3, which forces the horizontal drive signal to move out to maximum delay and the delay stabilizer lock line to go high.

CONVERGENCE CONTROL

DIAGRAMS 10 THROUGH 14

The convergence control circuitry is located on the Convergence Control board, A8A1, the Convergence Generator board, A8A2, the Convergence Output board, A14A1, and the Blue Lateral board, A5A1. It controls the position of the red, green, and blue beams with respect to each other to maintain a converged display—the three beams superimposed over one another—at all points on the crt screen.

Although the convergence control circuitry uses the same beam position information (the vertical ramp and the horizontal ramp) as the vertical and horizontal deflection circuitry, it operates independently of this circuitry, driving its own convergence coils.

The convergence circuitry drives two sets of coils. The radial convergence yoke contains a red, a green, and a blue convergence coil (see Fig. 5-19). The red and green coils control both the horizontal (x) and the vertical (y) positions of their respective beams. The blue coil, however, is positioned such that it can control only the vertical position of the blue beam. To allow control of the blue beam's horizontal position, the Blue Lateral board is provided. This auxiliary yoke has three convergence coils, all driven by the same signal. The coils in this yoke are oriented such that the magnetic field created provides horizontal positioning control of the blue beam, but has nearly no affect on the red, and green beams.

Four convergence correction signals are generated to drive these coils: red convergence, green convergence, blue convergence, and blue lateral convergence. The blue convergence signal controls the vertical position of the blue beam; the blue lateral convergence signal controls the horizontal position of the blue beam. The red convergence and green convergence signals control both the vertical and horizontal positions of their respective beams.

Each of these four signals is a combination of a number of convergence correction signals, each of which has its chief affect on a specific area of the screen (primary convergence correction signals) or on the convergence symmetry both longitudinally and laterally on the screen (secondary convergence signals).

The primary convergence correction signals consist of essentially half parabolas (see the discussion of the convergence waveform processor and convergence matrix circuits). The crt screen is divided into nine primary convergence areas (see Fig. 5-20A). A separate set of primary convergence correction signals controls the convergence in each of these areas. In addition, a separate set of controls (located in the main frame front drawer) is provided to allow adjustment of each group of primary correction signals. The convergence of the three beams can thus be adjusted in each of the primary convergence areas of the screen. Since the primary convergence areas overlap, the adjustment sequence from center controls to corner controls (Top Right, Top Left, etc.) causes increasing degrees of convergence refinement.

The secondary convergence correction signals consist of 'B' shaped and 'S' shaped waveforms (see Fig. 5-20B). They affect the symmetry (straightness of the lines of the crosshatch pattern) top-to-bottom and left-to-right. Neither of the two waveforms affects the display at the center of the crt, or at the top, bottom, left side, or right side of the screen. Their affect is thus somewhat independent of the primary convergence correction signals.

The circuitry to generate these signals is divided into four main sections (see Fig. 5-21). The convergence waveform generators circuitry produces the basic waveforms from which the various correction signals are created, vertical axis parabolas, horizontal axis parabolas, 'B' shaped waveforms, and 'S' shaped waveforms.

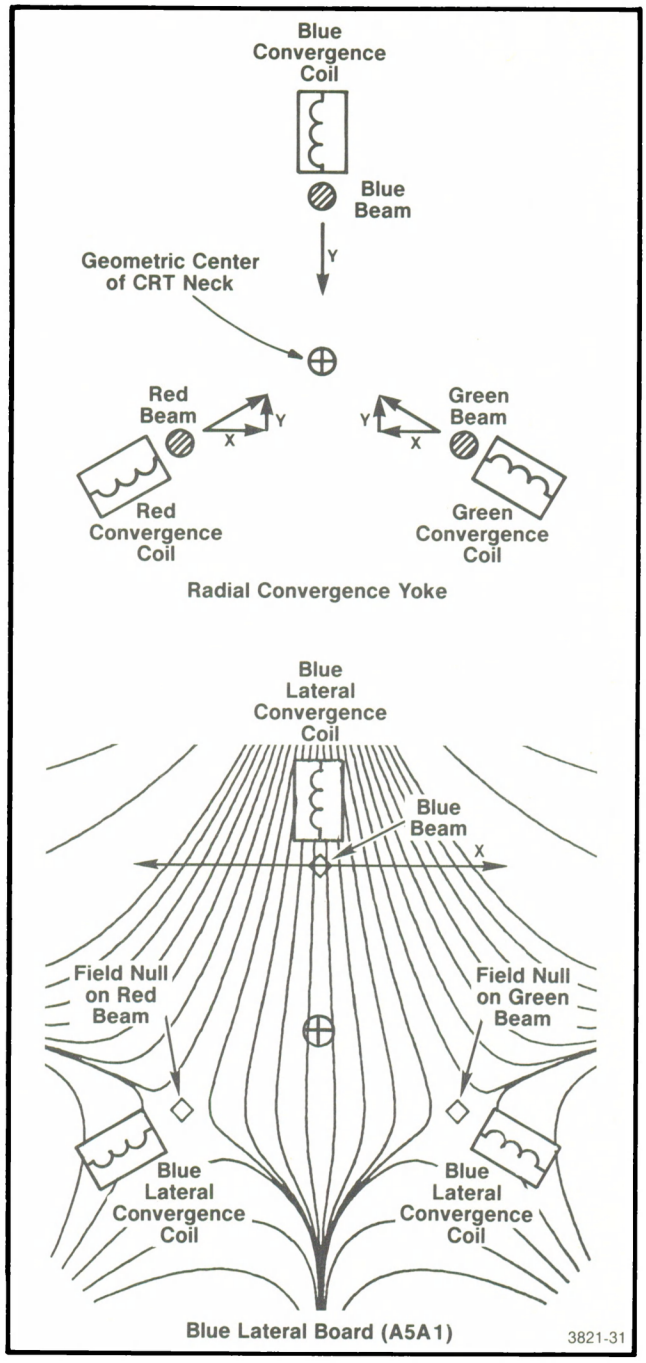

Fig. 5-19. Effect of convergence yoke and blue lateral board on red, green and blue beams.

The convergence waveforms processor circuitry chops (splits in half) the parabola signals to create signals that are active when the raster is at various areas of the crt screen, top, bottom, left, right, top right, top left, bottom right, and bottom left.

The convergence matrix is made up of divider networks that allow various magnitudes of the signals to be picked off to drive specific convergence coils. These individual signals are then summed to create the four convergence correction signals; red convergence, green convergence, blue convergence, and blue lateral convergence. The convergence output amplifiers then convert these signals from voltage to current and apply them to the convergence coils.

The following discussion provides a detailed description of these circuits.

DIAGRAM 10

Convergence Waveform Generators

The convergence waveform generator circuits are located on the Convergence Generator board, A8A2. These circuits convert the vertical ramp and the horizontal ramp (from the raster control circuitry) into parabola, 'B' shaped, 'S' shaped, and corner convergence waveforms (see Fig. 5-22). The vertical and horizontal ramps indicate position on the crt screen. The convergence waveforms are thus also referenced to position (d), either vertical position (y) or horizontal position (x). The equations in Fig. 5-22, thus represent voltage as a function of position (d) on the screen, in this case vertical position (y).

All of these circuits, except the convergence delay circuit, use an analog multiplier to produce their respective waveforms. The operation of this device is discussed in detail in the description of the vertical parabola generator circuit.

Convergence Delay Compensation. The convergence delay compensation circuit inverts the horizontal ramp and level shifts it to compensate for subsequent delays in the convergence circuitry and the convergence coils. The horizontal ramp from the horizontal raster control circuit (see diagram 6) is applied to the Convergence Generator board through J271 pin 2. It is then fed to pin 2 of operational amplifier U612. Also fed to pin 2 is a dc offset voltage, which is applied to the board through J271 pin 6. Convergence Delay adjustment R635 (see diagram 13) controls this dc offset voltage. The level of the horizontal ramp is directly related to the horizontal position of the beam on the crt screen, the zero volt point on the ramp representing the center of the screen (see Fig. 5-23). The adding of a positive offset voltage to the delay compensated horizontal ramp, using the Convergence Delay adjustment, causes the time of the zero crossing to occur before the center of the raster. Thus, the horizontal ramp is in effect advanced. Jumper J600 allows the advance to be set for zero (jumper between pins 3 and 4) for calibration. The delay compensated horizontal ramp is applied to the horizontal parabola generator and the horizontal chopper circuits (diagram 11)

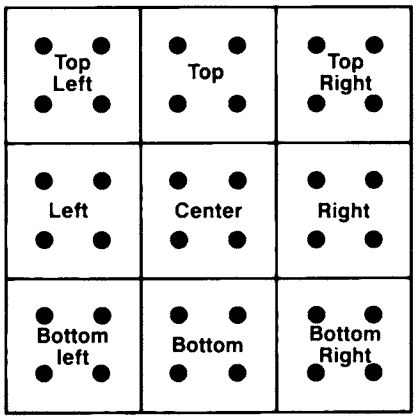

Primary Convergence Adjustments located in mainframe front drawer.

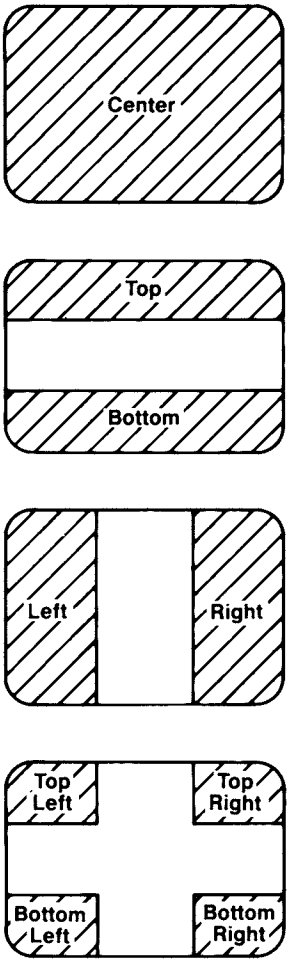

Areas of CRT Screen affected by Primary Convergence Adjustments.

(A) Primary Convergence Adjustments Affect Convergence Linearity.

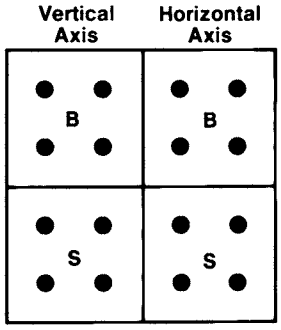

Secondary Convergence Adjustments located in mainframe front drawer.

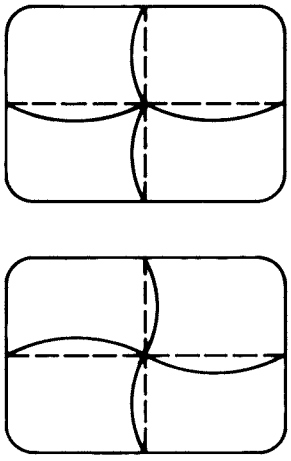

'S' Correction

Secondary Convergence Adjustments effects on display symmetry

'B' Correction

(B) Secondary Convergence Adjustments Affect Convergence Symmetry.

3821-32

Fig. 5-20. Conversion correction adjustments: (A) Primary convergence adjustments; (B) secondary convergence adjustments.

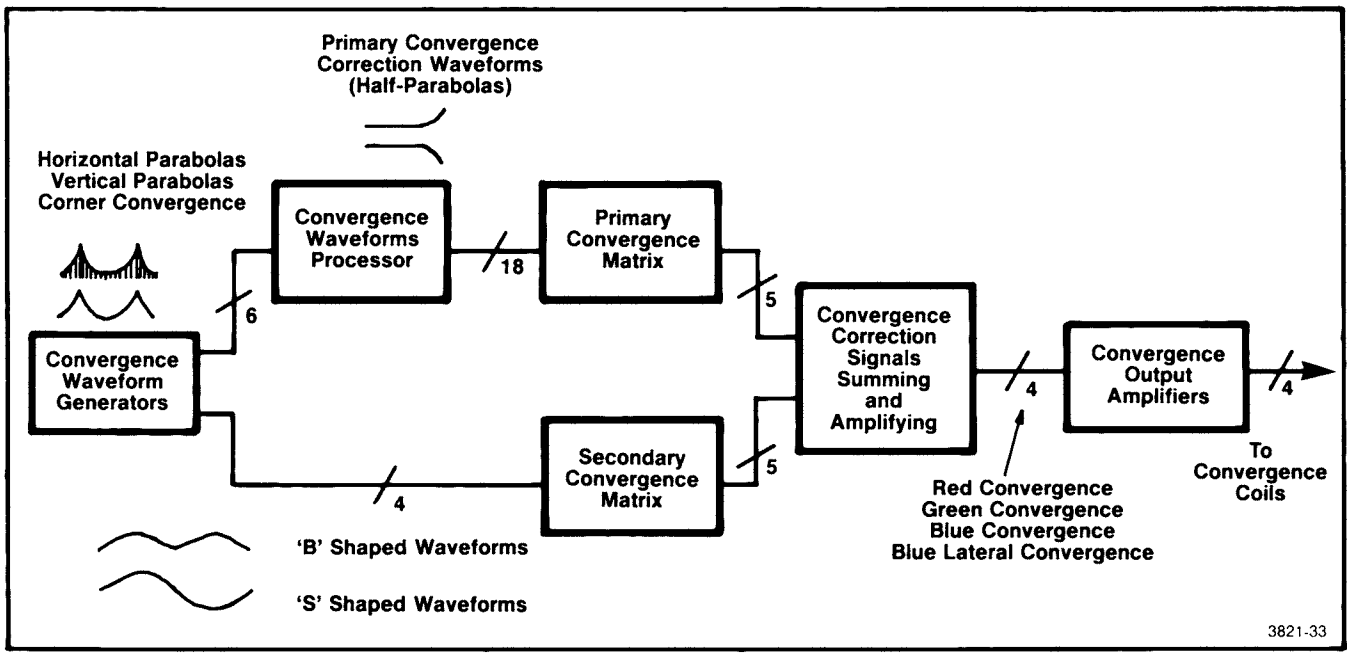

Fig. 5-21. Block diagram of convergence control circuitry

Vertical Parabola Generator. The vertical parabola generator circuit creates negative-going and positive-going parabola waveforms. The core element of this circuit is four quadrant multiplier U217. This device multiplies two pairs of differential inputs and produces a pair of differential output currents that are proportional to the product of the multiplication (see Fig. 5-24). The other convergence waveform generator circuits also use this analog multiplier device to create their respective waveforms.

The vertical ramp from the vertical raster control circuit (see diagram 6) is applied to the Convergence Generator board through J271 pin 4. It is then fed to pins 4 and 9 of U217. In this case, U217 sums the vertical ramp with a dc level (applied to pins 8 and 12), then squares the signal to create a differential pair of parabolas at current output pins 2 and 14:

$$\text{U217 Output pins 2 and 14} = (\text{vertical ramp} + \text{dc level})^2$$

X/Y Offset adjustment R300 controls the dc level applied to pins 8 and 12; it is set so that the null points (minimum or maximum) of the parabolas occur at the same time as the zero volts point (vertical center of the crt screen) of the vertical ramp.

The differential parabola outputs of U217 at pins 2 and 14 are applied to operational amplifier U220A, which converts them into a single positive-going parabola (y^2) at pin 1. Dc Offset adjustment R302 sets the dc level of the parabola; it is adjusted so that the null point of the parabola at pin 1 of U220A is at 0 V.

Operational amplifier U220B inverts the parabola, creating a negative-going and dc shifted parabola ($1 - y^2$) at its output (see Fig. 5-22). Dc Level adjustment R220 sets the gain of U220B and thus determines the amplitude of the parabola at TP229 with respect to the dc offset level that R217 sets at pin 6 of U220B. With CR227 conducting and CR226 turned off, this dc offset level produces a voltage limit for the parabola at TP229 of approximately 0 V. Resistor R220 is then adjusted so that the most negative portions of the parabolas (the points of the parabolas) just reach this voltage limit.

Horizontal Parabola Generator. The horizontal parabola generator circuit operates identically to the vertical parabola generator circuit: the delay compensated horizontal ramp is applied to analog multiplier U414; a positive-going parabola (x^2) is produced at pin 6 of U416 and an inverted and dc shifted, negative-going parabola ($1 - x^2$) is produced at TP523. Transistor Q712 blanks the output of U712 during horizontal retrace blanking to block the horizontal ramp retrace spike from appearing on the inverted and shifted horizontal parabola.

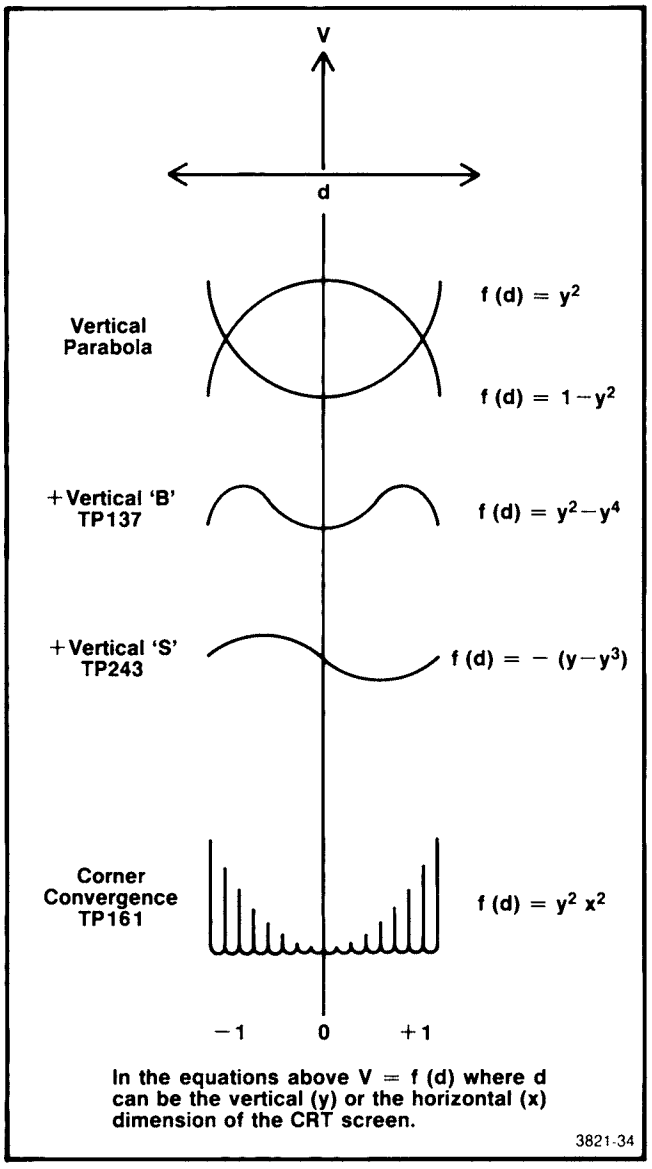

Fig. 5-22. Convergence waveform generators basic output signals.

Vertical 'B' Waveform Generator. The vertical 'B' waveform generator uses analog multiplier U125 to create a 'B' shaped waveform ($y^2 - y^4$)—see Fig. 5-22. The positive-going vertical parabola is applied to pin 9 of U125 and the inverted and shifted, negative-going vertical parabola is applied to pin 4. Dc voltages, set by X Offset adjustment R111 and Y Offset adjustment R101, are applied to pins 12 and 8 of U125, respectively. The result of this multiplication is a differential pair of 'B' shaped waveforms at pins 14 and 2. Integrated circuit U130A converts the waveforms into a single positive-going 'B' shaped waveform, the + vertical 'B' signal, at TP137. Integrated circuit U130B inverts and shifts the U130A output, creating a positive-going, dc shifted 'B' waveform, the − vertical 'B' signal, at TP141.

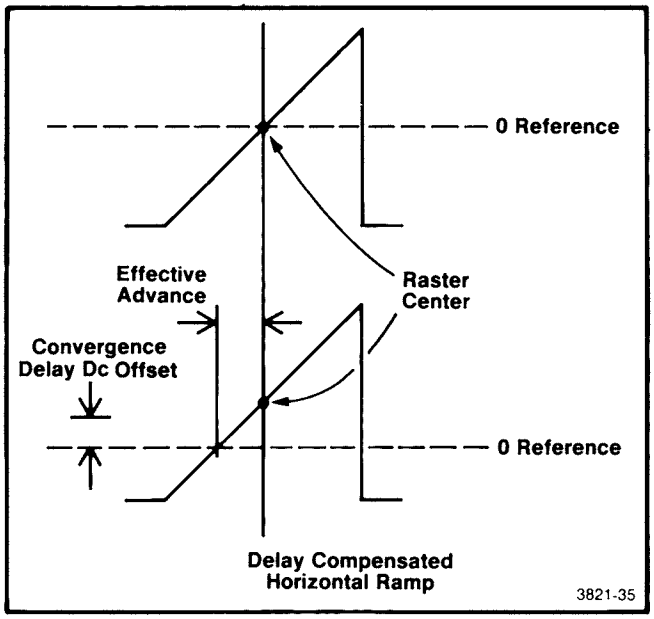

Fig. 5-23. Effect of convergence delay compensation circuit on the horizontal ramp.

Resistors R111 and R101 adjust the dc levels of the input parabolas at pins 9 and 4 of U125, respectively. They thus allow symmetry adjustment of the output waveforms. Dc Offset adjustment R119 adjusts the overall dc level of the output waveforms. Connectors J117 and J130 allow their respective input signals to be shorted to ground for calibration.

Horizontal 'B', Vertical 'S', and Horizontal 'S' Waveform Generators. The horizontal 'B', vertical 'S', and horizontal 'S' waveform generator circuits operate identically to the vertical 'B' waveform generator circuit; they merely have different input signals. In the case of the 'S' waveform generator circuits, a ramp is multiplied by a parabola to create an 'S' shaped waveform $-(x - x^3)$—see Fig. 5-22.

Corner Convergence Generator. The corner convergence generator circuit also operates identically to the vertical 'B' waveform generator circuit. However in this case, the vertical parabola is multiplied by the horizontal parabola to create the corner convergence signal (y^2x^2)—see Fig. 5-22.

DIAGRAM 11

Convergence Waveforms Processor

The convergence waveform processor circuitry chops (splits in half) the primary convergence waveforms from the

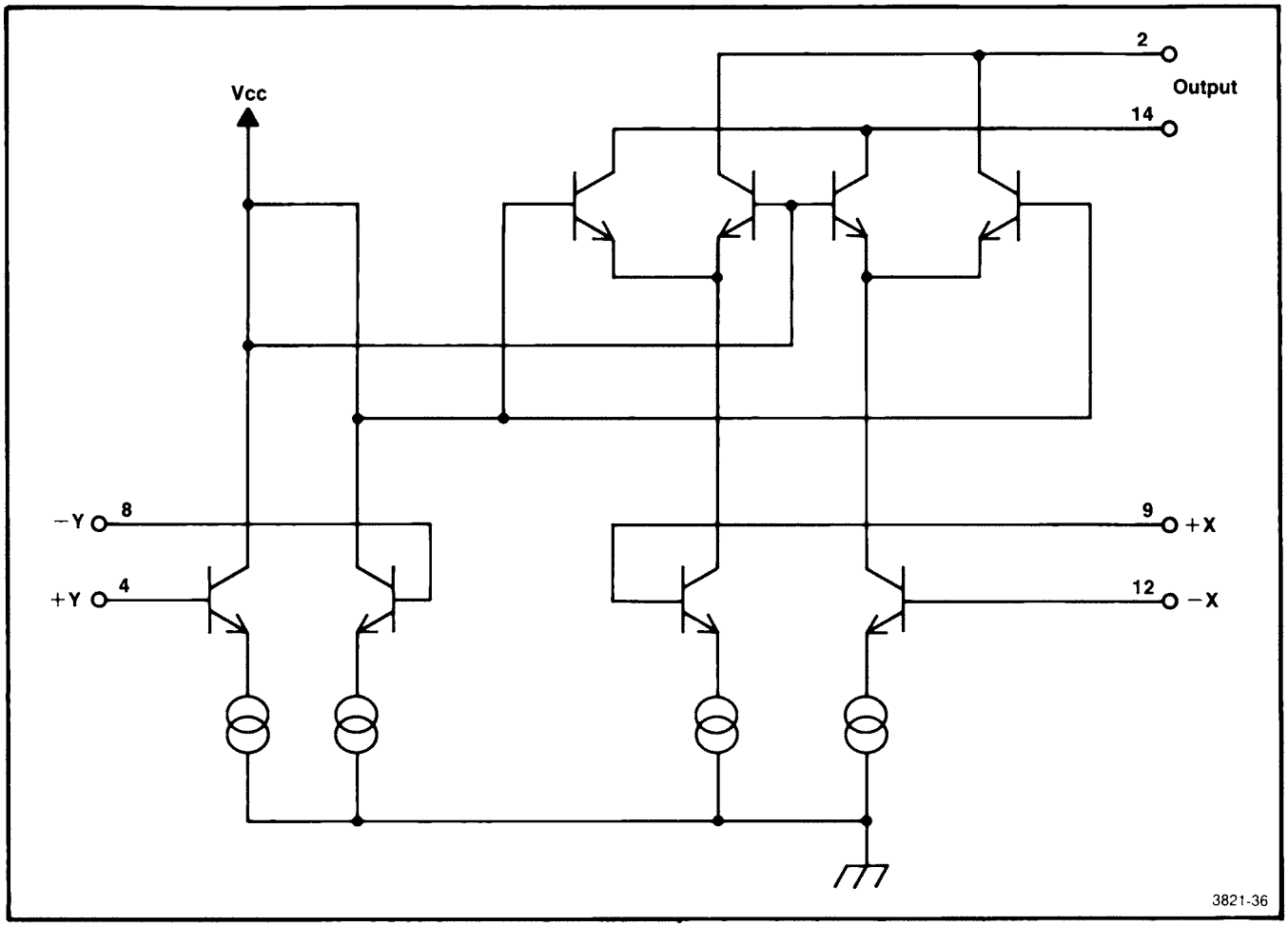

Fig. 5-24. Simplified schematic of the four quadrant multiplier IC used in the convergence waveform generators: U217, U414, U125, U235, U427, U637 and U150.

convergence generator circuitry, then applies them to inverting and non-inverting unity gain amplifiers to create a pair of complementary signals, which are applied to the primary convergence matrix.

Vertical Chopper. The vertical chopper chops the vertical parabola and the corner convergence signal. The vertical ramp from the vertical raster control circuit (see diagram 6) is applied to dual comparator U253 (P271 pin 4—diagram 10). Then, U253 creates a pair of complementary square waves with transitions at the beginning of the vertical ramp and at the middle (vertical center of the crt screen) of the ramp (see Fig. 5-25). These chopping signals are then applied to the control inputs of analog switch U271 (pins 13, 5, 6, and 12).

Integrated circuit U271 consists of four independent switches. A high on the control line of one of the switches causes it to close; a low causes it to open. The vertical parabola from the vertical parabola generator circuit (see diagram 10) is applied to two of these switches through pins 1 and 4 of U271. The chopping signals then allow one half of the parabola to pass through one switch and the other half of the parabola to pass through the other switch, creating the top signal at pin 3 and the bottom signal at pin 2.

Integrated circuit U271 chops the corner convergence signal, applied to pins 8 and 11, in the same manner, creating the top corner convergence signal and the bottom corner convergence signal. Then U175 (part of the horizontal chopper) further chops these signals (see discussion in next paragraph).

Horizontal Chopper. The horizontal chopper operates identically to the vertical chopper. Dual rate comparator U261 creates a pair of horizontal chopping signals from the delay compensated horizontal ramp (generated by the convergence delay compensation circuit—see diagram 10). Analog switch U360 uses these signals to chop the horizontal parabola into a right parabola (pins 9 and 10) and a left

parabola (pins 2 and 3). Integrated circuit U175 chops the two chopped corner convergence signals, which have already been chopped by the vertical chopping signal, creating four corner convergence signals: top left, top right, bottom left, and bottom right (see Fig. 5-25).

Top and Bottom Convergence Paraphase Amplifiers. The top and bottom convergence paraphase amplifiers operate as phase splitters. The top signal (1/2 the vertical parabola) is applied to operational amplifier U370B. Then, U370B inverts the signal and applies it to dual phase amplifier Q381 and Q382. Since R390 and R391 are the same value (1.00 kΩ) the gain of Q381 and Q382 (a Darlington pair) is unity. The output signal at the collector of Q381 is thus equal in amplitude, but inverted with respect to the output signal at the emitter of Q382. Transistors Q393 and Q394 buffer the outputs of the dual phase amplifier, producing a pair of signals, + top and − top, at pins 35 and 16 of J271, respectively. Feedback stabilization for the circuit is provided by R381 (Note that R381 and R370 are the same value, creating an overall gain for the amplifier of unity.)

Left and Right Convergence Paraphase Amplifiers. The left and right convergence paraphase amplifiers operate identically to the top and bottom convergence paraphase amplifiers, creating the + left, − left, + right, and − right signals.

Corner Convergence Paraphase Amplifiers. The corner convergence paraphase amplifiers perform the dual function of buffering the corner convergence signals and inverting them to create a pair of corner convergence signals. For example, U290 (wired as a voltage follower) buffers the top left signal to create the + top left signal at pin 17 of J271; U275 inverts and buffers the top left signal to create the − top left signal at pin 37 of J271.

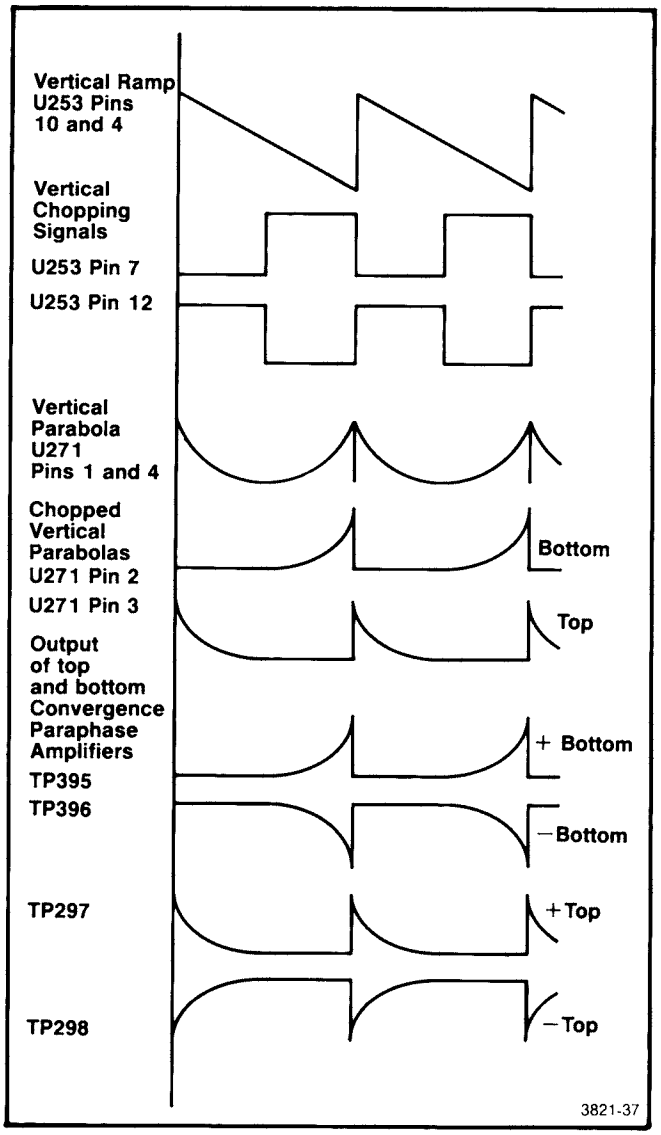

Fig. 5-25. Example of signal processing in the convergence waveforms processor.

DIAGRAM 12

Convergence Matrix

The convergence matrix is located on the Convergence Control board, A8A1. It consists of thirteen nearly identical resistor networks and four output amplifiers. Each of the resistor networks contains four potentiometers; the only differences in these networks is the values of the resistors and their input signals. Nine of the resistor networks control the primary convergence correction signals, which control the convergence in the primary sectors of the crt screen (see Fig. 5-20A). The remaining four resistor networks control the secondary convergence correction signals, which control the convergence symmetry of the three beams both vertically and horizontally (see Fig. 5-20B).

Primary Convergence. Each of the nine primary convergence resistor networks has its chief affect on one area (sector) of the crt screen. The outputs of the nine resistor networks are summed to create five primary-convergence correction signals: red primary, blue primary, blue lateral primary, green primary-vertical, and green primary-horizontal.

The convergence coils (see Fig. 5-19) are positioned such that a change in current in the positive direction through one of the coils causes its associated beam to be moved toward the center of the crt neck; a change in current in the negative direction causes the beam to move away from the center. Changes in the blue convergence coil current thus move

the beam vertically. Current changes in the red and green convergence coil, however, cause both a vertical and a horizontal movement of their respective beams. In order to allow separate control over the vertical and horizontal movement of the red and green beams, the current through the red and green convergence coils is divided into two components.

To control the horizontal separation of the red and green beams, currents of equal magnitude and the same direction are conducted in the respective convergence coils. Thus, as the current is made more positive, the two beams move toward the center of the crt neck. The horizontal component of the movement brings the beams closer together; the vertical component does not affect convergence, because both beams are moved the same amount and in the same direction.

To control the vertical separation of the two beams, currents of equal magnitude, but opposite direction, are conducted in the respective convergence coils. In this case, as the magnitude of the current is changed, one beam is moved toward the center of the crt neck and the other is moved away from the center. The vertical component of the movement then brings the beams closer together; the horizontal component does not affect convergence, because both beams are moved the same amount and in the same direction.

Using the center resistor network as an example, Red/Green-Horizontal adjustment R350 and Red/Green-Vertical adjustment R355 jointly control the movement of the red and green beams. Adjustment R350 permits currents of equal magnitude and the same polarity to flow in the red primary and green primary-horizontal lines, and thus control the horizontal separation of the red and green beams. Adjustment R355 permits currents of equal magnitude and the same polarity to flow in the red primary and the green primary-vertical lines. Operational amplifier U405, however, reverses the current in the green primary-vertical line before it is applied to the green convergence coil, so that it opposes the vertical current component in the red convergence coil. Thus, R355 controls the vertical separation of the red and green beams.

Blue Vertical adjustment R465 controls the current in the blue convergence coil and thus controls the vertical position of the blue beam. Blue Horizontal adjustment R450 controls the current in the blue lateral yoke, which in turn controls the horizontal position of the blue beam.

The other eight primary convergence resistor networks use the same technique to control the relative position of the three beams in their respective areas of the crt screen. Instead of selecting a balance between a pair of opposite dc voltages, however, the adjustments in these resistor networks select a balance between a pair of opposite polarity convergence correction signals (see Fig. 5-26).

Secondary Convergence. The secondary convergence resistor networks operate identically to the primary convergence resistor networks. The only difference is that the adjustments in the secondary convergence resistor networks sum parts of dual phase 'B' shaped and 'S' shaped signals

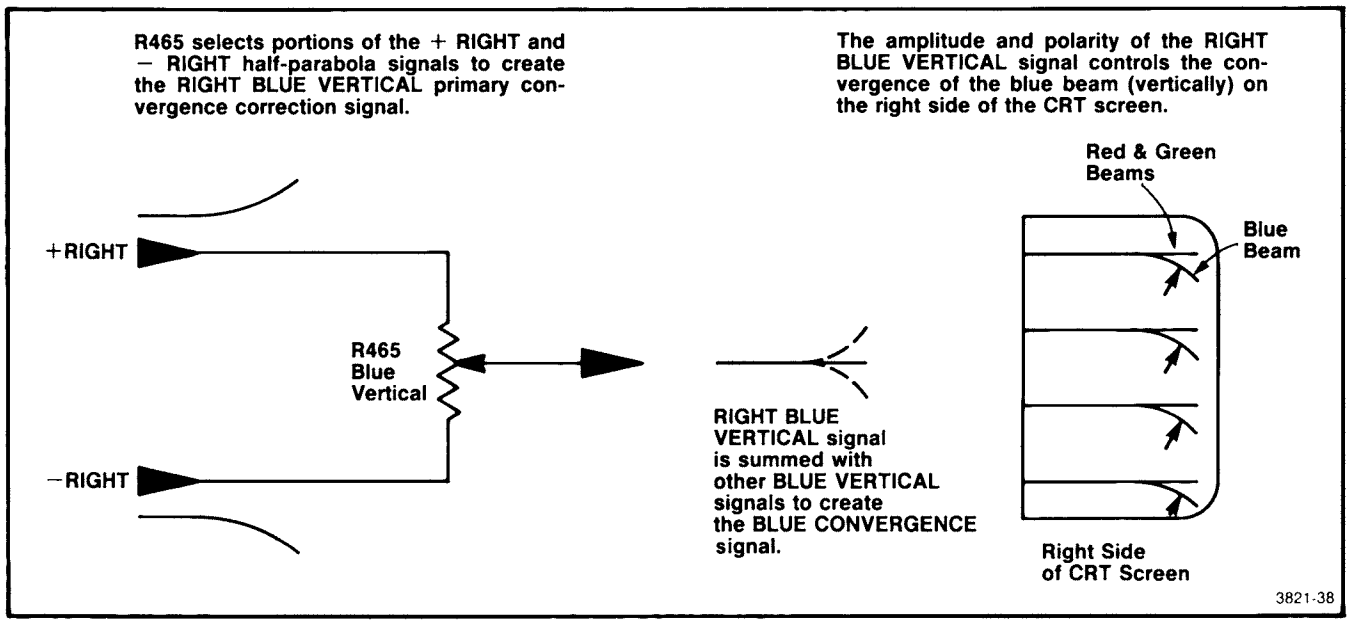

Fig. 5-26. Equivalent circuits for red convergence output amplifier.

that affect the vertical and horizontal convergence symmetry.

Matrix Output Amplifiers. The four matrix output amplifiers (U305, U205, U108, and U109) sum the outputs of the thirteen resistor networks, invert the resulting signals, amplify them, and apply them to the four convergence output amplifiers. Operational amplifier U405 sums and inverts the green primary-vertical signal from the primary resistor network; U508 inverts the green secondary-vertical signal from the secondary convergence resistor network. Secondary switch S626 blocks the secondary convergence correction signals from being applied to the convergence coils during calibration, while the primary convergence adjustments are being set.

DIAGRAM 13

Raster Drawer Controls

The raster drawer controls are located inside the mainframe front drawer on the Convergence Control board, A8A1. They consist of a number of potentiometers and an operational amplifier that supply reference voltages and signals to the raster control circuitry.

The operation of Horizontal Position adjustment R920, Horizontal Ramp Calibration adjustment R928, Horizontal Size adjustment R925, Vertical Position adjustment R820, Vertical Size adjustment R825, and Vertical Ramp Calibration adjustment R827 are described in the discussion of the vertical and horizontal raster control circuitry (diagrams 5 and 6). The operation of Convergence Delay adjustment R635 is described in the discussion of the convergence waveform generators circuitry (diagram 10).

Operational amplifier U539 creates the top and bottom tilt signal, which the vertical raster control circuitry uses to create the top and bottom pin and/or tilt signal (see diagram 5). The inverted and dc-shifted, delay compensated, horizontal parabola (1 — H Conv Parab) from the horizontal parabola generator (see diagram 10) is applied to U539 through Top and Bottom 'S' adjustment R633. Top and Bottom Tilt adjustment R630 sets the dc level at R628 (an input resistor to U539). Then, U539 amplifies and inverts the parabola and the top and bottom tilt signal, and applies it to the vertical raster control cricuit (diagram 5). Adjustment R633 sets the amplitude of the 'S' portion of the top and bottom tilt signal; R630 sets its dc level.

Set Up switch S726 reduces the gain of the vertical ramp generator circuit (diagram 5) to 10% of normal gain for calibration. It also increases the sensitivity of the vertical scan fail circuit (see the discussion of the vertical deflection circuitry).

Video Drawer Controls

The video drawer controls are located in the mainframe front drawer on the Convergence Control board, A8A1, and the Convergence Generator board, A8A2. The operation of the White Balance controls (R701, R705, and R711), the Black Balance controls (R801, R805, and R811), Black Level Preset control R905, Contrast Preset control R911, Black Level control R825, Contrast control R833, White Pedestal switch S720, and the Red, Green, and Blue Screen switches (S602, S606, and S612) are described in the discussion of the video amplifier circuitry (diagrams 2, 3, and 4).

The input/output lines to the Control board of the interface module through J949 pins 1 through 6 and J827 pins 1 through 4 allow the interface module to control or alter some mainframe functions as described in Table 5-2.

Table 5-2
FUNCTIONS AVAILABLE TO INTERFACE MODULE CONTROL BOARD VIA SQUARE PINS

Pins	Function
J949	
pins 1 and 2	Boost black level during pulse cross mode
pins 3 and 4	Reduce contrast during pulse cross mode
pins 5 and 6	Indicates when CONTRAST or BLACK LEVEL controls are in detented position
J827	
pins 1 and 2	Vertical Size[a]
pins 3 and 4	Horizontal Size[a]

[a]Used in underscan mode. Resistors are added between respective pins to decrease the horizontal and vertical size.

For options where an interface module Control board is not used, jumpers P949A and P949B are installed to connect the black level and contrast signal lines to the BLACK LEVEL and CONTRAST controls. For connections of jumpers P949A and P949B, see diagram 13.

High Voltage Overload Indicator

The operation of HV OVERLOAD indicator DS619 is described in the discussion of the high voltage supply circuitry (diagram 15).

Convergence Control Power Supply Regulators

A separate set of three-terminal regulators regulate the power supplies for the Convergence Control board and the Convergence Generator board. Integrated circuit U400 regulates the +12 V supply and U410 regulates the −12 V supply on the Convergence Control board; U590 regulates the +12 V supply on the Convergence Generator board.

Operational amplifier U595 and three-terminal regulator U593 regulate the −12 Vdc supply on the Convergence Generator board. The voltage at pin 2 of U595 is 0 V when the absolute values of the +12 V and −12 V supplies are the same. Slight variations in the supply voltages are sensed through divider R595 and R596. Error amplifier U593 amplifies these variations and applies them to the common input of U592. Then U592 changes the negative supply voltage (−12 V supply), making it equal and opposite to the positive voltage (+12 V supply) on R596.

POWER indicator DS618 lights when the front-panel POWER switch is pulled out (on), causing power to be applied to the mainframe.

DIAGRAM 14

Convergence Output Amplifiers

The four Convergence Output amplifiers are located on the Convergence Output board, A14A1. The red, green, and blue output amplifiers drive the coils in the radial convergence yoke. The blue lateral output amplifier drives the coils on the Blue Lateral board. The blue lateral coils control the horizontal movement of the blue beam. Each amplifier operates essentially the same.

Red Amplifier. The red amplifier converts the red convergence signal from voltage to current and applies the resulting current signal to the red convergence coil, L203.

The red convergence signal is applied to the Convergence Output board through J750 pin 15. Transistors Q335A, Q337, Q425, Q335B, Q339, and Q445 form a differential amplifier with a constant current source (Q332) at the emitters of Q335A and Q335B. With the base of Q335B held at approximately +10 V, the red convergence signal applied to the base of Q335A controls the dual outputs of the amplifier. The amplifier has two sides: an inverting side, Q335A, Q337, and Q425 (active on the negative cycle); and a non-inverting side, Q335A, Q335B, Q339, and Q445 (active on the positive cycle)—see Fig. 5-27 for equivalent circuits for the two sides of the amplifier. The two sides operate in a class-B, push-pull fashion, pulling current through one half of the red convergence coil during one half of the red convergence signal, and through the other half of the coil during the other half of the cycle. Crossover Distortion adjustment R342 adjusts the current through Q332 to ensure linearity during the switching interval between the two sides of the amplifier. Resistors R424 and R435 sample the current through the outputs of their respective sides of the amplifier. Resistors R324 and R336 feed back the sampled voltage to the inputs of their respective sides of the amplifier. The center tap of L203 is tied to its own filtered, fuse protected supply, derived from the Vcc supply. Jumper P239 allows Q332 to be turned off, which shuts down the amplifier for calibration. A four-diode limiting network (CR435 through CR438), connected to the Q425 and Q445 collectors, prevents Q425 and Q445 from going into saturation.

Green and Blue Lateral Amplifiers. The green and blue lateral amplifiers operate identically to the red amplifier.

Blue Amplifier. The blue amplifier operates identically to the red amplifier except that a current limiting network has been added. Transistors Q627 and Q745 in the blue amplifier prevent the emitters of Q825 and Q845 from rising above approximately 1.4 V and thus limit the current through the blue convergence coil. This extra protection circuit is provided because of the additional current driving capability of the blue amplifier (1.5 times more current than the other three amplifiers).

Convergence Output Power Supply Regulator. Three-terminal regulators U927, U933, and U947 provide regulated power supply voltages of +12 V, −12 V, and +5 V, respectively, for the four output amplifiers.

Connector J853 selects Vcc for the amplifiers according to the horizontal scan rate being used. Refer to Installation, Section 4, for Vcc selection. Fuses F152, F249, and F449 protect the current transistors and the amplifiers if a convergence coil should develop a dc short; and, vice versa, protect the coils if a transistor should fail.

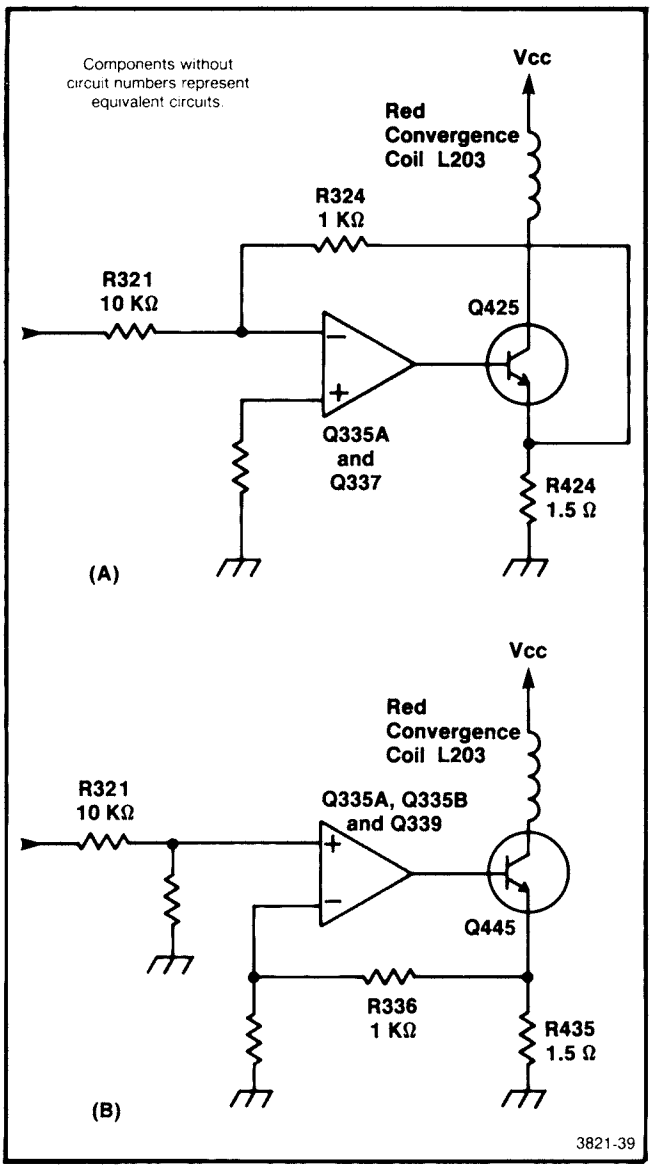

Fig. 5-27. Equivalent circuits for red convergence output amplifier: (A) Inverting half of amplifier; (B) non-inverting half of amplifier.

HIGH VOLTAGE POWER SUPPLY DIAGRAM 15

The high voltage regulator, focus, and screen grid (G2) supply circuitry is located on the Regulator board, A7A2A1 and the Focus board, A7A2A2, and the high voltage transformer assembly. This circuitry produces five supply voltages: the extremely high tension (EHT) +25 kV supply, which goes to the crt anode; the adjustable static focus voltage; and the three, adjustable G2 supplies, one for each screen grid (red, blue, and green). The circuitry also amplifies the dynamic focus signal, which modulates the static focus to create the focus signal.

+25 kV (EHT) Supply

The +25 kV supply circuit uses a resonant flyback technique to generate the supply voltage. The flyback pulse is synchronized with the horizontal retrace blanking pulse, in order to maintain uniform brightness on the screen. This circuit operates almost identically to the horizontal deflection ramp generator. (See the discussion of the horizontal deflection ramp generator for a detailed description of the resonant flyback concept).

Through the turning on and off of flyback transistor Q100, a resonant condition is established through 'S' capacitors C108 and C208, and between flyback capacitor C113 and transformer T100. This resonance produces a flyback pulse with a peak voltage of approximately +800 V (see Fig. 5-28). Transformer T100, which acts as the inductor in the circuit, converts the flyback pulse to +25 kV at the output of the secondary. Eight diodes, which are part of the secondary winding, provide half-wave rectification of the secondary voltage. The capacitance of the crt anode's aquadag coating filters the supply voltage. A tap on the secondary provides an 8.33 kV voltage source for the static focus supply. The link secondary of T100 provides a flyback pulse sample of approximately 13 V peak, which is used to phase lock the flyback circuit with the horizontal retrace blanking pulse, and is also used in the over-voltage and over-current protection circuits.

Phase Lock

Phase lock comparator U342 synchronizes the flyback pulse with the horizontal retrace blanking interval. The horizontal retrace blanking is applied to the Regulator board through P209 pin 5 (see Fig. 5-29). A phase comparator in U342 compares the phase of the horizontal retrace blanking pulse with the flyback sample pulse from the link secondary of T100. The resulting error signal at the phase comparator 2 output (pin 13 of U342) is fed back at pin 9 to the control voltage input of the voltage controlled oscillator (VCO). The level of this input adjusts the phase and frequency of the VCO such that the flyback sample pulse is phase locked with the horizontal retrace blanking pulse.

Divider R435 and R436, and diode CR335, inhibit the control voltage (pin 9 of U342) of the VCO from going above 3.6 V. The maximum output frequency of the VCO is thus limited to approximately 45 kHz.

The VCO output is a rectangular waveform signal; flyback transistor Q100 is turned off during the positive-going portion of this signal and on during the negative-going portion. When the VCO signal goes positive, Q352 is turned on, creating a negative-going transition at its collector. This negative edge is fed through C337 to Q334, which turns it on. The resulting positive-going transition at Q334's collector is coupled through C326 to Q321. This positive-going

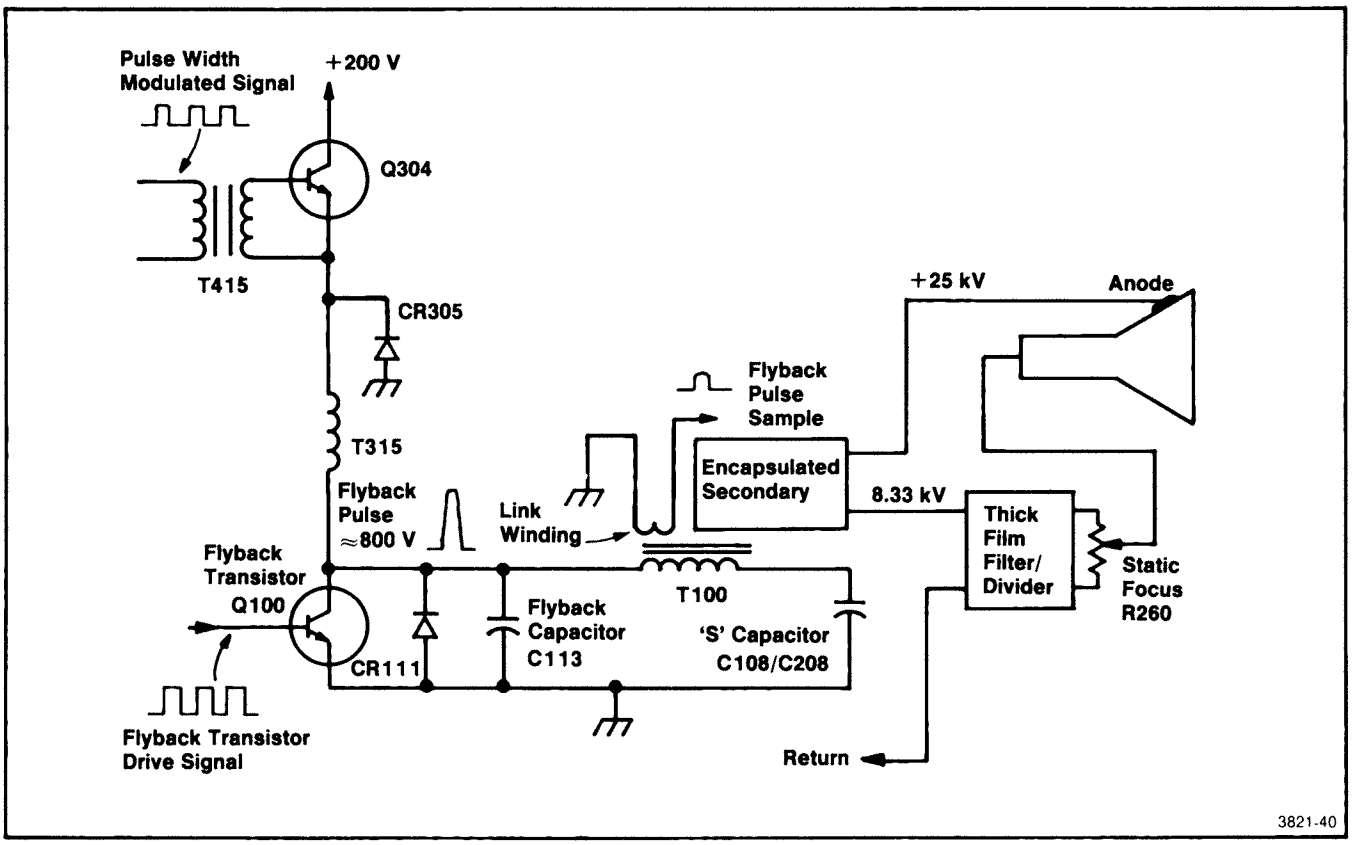

Fig. 5-28. Simplified schematic of the high voltage supply resonant flyback circuit.

edge turns off Q321 and Q225, which turns off flyback transistor Q100 and initiates flyback. When the VCO signal goes negative, Q352 is turned off, Q334 is turned off, Q321 and Q225 are turned on, and Q100 is again turned on.

The flyback sample pulse at pin 3 of U342 is also applied through R352 to the base of Q352. When this pulse goes high, Q352 is held on, blocking any negative-going VCO signal transitions. Transistor Q100 is thus inhibited from turning on during flyback.

Capacitor C337, and R235 limit Q100's turn-on time. When a positive-going transition is applied to the base of Q334, C337 begins charging, at a rate determined by the C337-R234 time constant. If a negative-going transition does not occur at the base of Q334, or if the VCO signal period becomes too long, the voltage across C337 eventually pulls the base of Q334 low and turns off Q100.

In the event of an over-voltage condition, Q533 and Q532 turn on Q334 and effectively reduce Q100's duty cycle to 0%. (See the discussion of over-voltage protection later in this section.)

B+ Supply Regulation

The B+ supply regulator circuit regulates the output level of the +25 kV supply. The B+ supply voltage at pin 1 of feed choke T315 provides a power source for the resonant flyback circuit. The dc level of the B+ supply voltage is equal to the average voltage of a 200 V peak-to-peak rectangular waveform (B+ supply reference signal) applied to pin 3 of T315. By varying the duty cycle of this B+ supply reference signal, the B+ supply voltage can be raised and lowered, which in turn raises and lowers the +25 kV supply voltage level. (A reduction in the B+ supply voltage reduces the flyback pulse amplitude, and vice versa.) In critical overload conditions, the duty cycle of the B+ supply reference signal is reduced to 0%, which shuts down the high voltage supply.

Regulating pulse width monitor U445 controls the duty cycle of the B+ supply reference signal (see Fig. 5-30). It senses the high voltage supply output level at pin 1 and 2, and changes the pulse width of its output pulses accordingly to maintain a constant +25 kV output level. The device also senses over-current and over-voltage conditions, and shuts down the supply when either approaches potentially damaging levels.

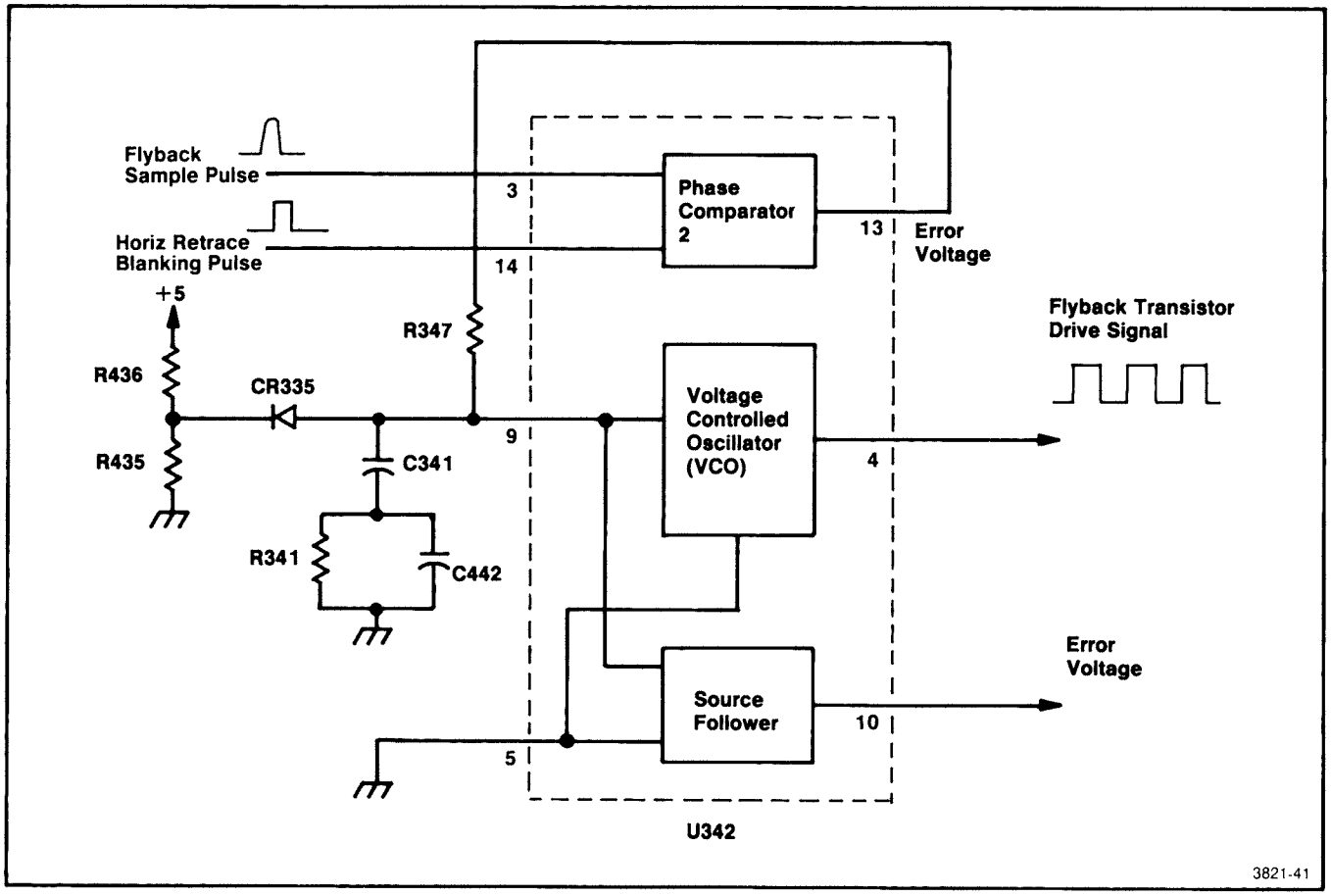

Fig. 5-29. Simplified schematic of the phase lock circuit.

The divider network, which is made up of thick film resistors R254-6, -7, and -8, R451, and HV Adj adjustment R452 provide a voltage sample of the 8.33 kV supply. Since this supply is derived from the same secondary as the +25 kV supply, any change in the +8.33 kV supply output is proportional to changes in the +25 kV supply output. This voltage sample is applied to the inverting input (pin 1) of the error amplifier in U445. Resistors R451 and R455, and zener diode VR451, set the reference level (at pin 2 of U445) of the error amplifier. The error voltage is applied to the noninverting side of the pulse width modulator comparator in U445. A ramp from the internal oscillator is applied to the other side of the comparator. At the beginning of the ramp, the comparator output is high. When the ramp crosses the error voltage level, the comparator output goes low. It remains low until the ramp resets to zero, at which time the comparator output goes high again. The output of the comparator is thus a pulse width modulated signal, the width of the pulse being dependent on the error voltage level and the rate of rise of the ramp.

Capacitor C441, R442, and Q437 determine the rate of rise of the ramp. Capacitor C441 and resistor R442 set the time constant of the oscillator in U445. Transistor Q437 is a current generator; the VCO input level, fed through the source follower in U342 to the base of Q437, sets the dc current level. The ramp rise rate is thus increased as the horizontal sweep rate is increased, which lowers the regulator loop gain and maintains loop stability. Transistor Q438 controls the retrace of the ramp. The pulse width modulated signal thus has the same frequency as the flyback pulse.

The pulse width modulated signal is fed through an emitter follower in U445 to output pins 11 and 14. Then, Q425 amplifies the signal and applies it to T415, which drives switching transistor Q304. When Q304 is turned on, it saturates, pulling its emitter to approximately +200 V. When it is turned off, the emitter returns to 0 V. The duty cycle of the drive signal determines the average voltage at the emitter of Q304. Feed choke T315 isolates the flyback pulse at Q100's collector from Q304, creating an effective dc voltage across the 'S' capacitors that is equal to the average voltage at pin 3 of T315.

High Voltage adjustment R452, which determines the attenuation of the high voltage sampled through the divider network made up of R254-6, -7, and -8, R451 and R452,

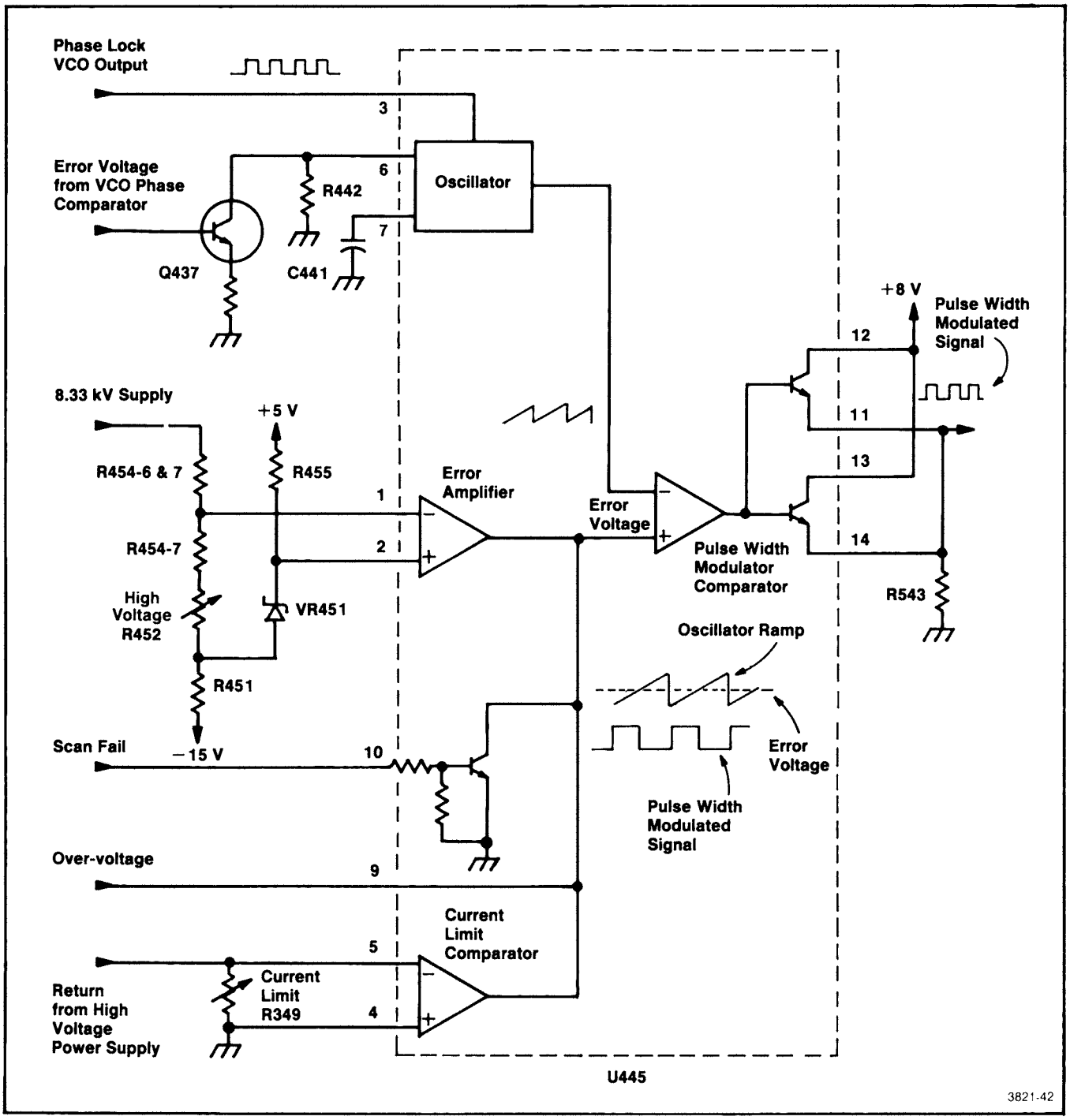

Fig. 5-30. Simplified schematic of B+ supply regulator circuit.

sets the input voltage to the inverting side of the U445 error amplifier. The adjustment of this input voltage allows the high voltage supply to be set for +25 kV ±1 kV.

Scan Fail

The scan fail sensing circuit causes a shut down of the high voltage supply when either the vertical or the horizontal deflection system malfunctions. The vertical scan fail line (from the Vertical Deflection circuit—diagram 7) and horizontal scan fail line (from the Horizontal Deflection circuit—diagram 8) are applied to the Regulator board through P209 pins 1 and 3, respectively. During normal operation of the vertical and horizontal deflection systems (see the discussions of the vertical and horizontal scan fail circuits) the vertical scan fail line is high and the horizontal scan fail line is low. Transistor Q359 is thus turned on and the shutdown input (pin 10) of U445 is held at approximately 0 V. If either the vertical or the horizontal deflection system fails to maintain adequate deflection, Q359 is turned off and pin 10 of U445 is pulled up. Inside U445, the voltage at the error input to the pulse-width modulator comparator is pulled low, causing the high voltage supply to shut down.

Capacitor C544 and resistor R541 perform a soft start function. When the power is turned on to the monitor, the high voltage supply is held off until C544 charges (approximately 4 seconds) and lowers the shutdown line (pin 10) to U445.

When the collector of Q359 goes high, HV OVERLOAD indicator DS619 (an LED) is also turned on, indicating shutdown of the high voltage supply due to scan failure.

NOTE

If the high voltage supply shuts down and HV OVERLOAD Indicator DS619 is on, the problem is due to either vertical or horizontal scan failure. If the high voltage supply shuts down and the HV OVERLOAD Indicator is off, it indicates that there is a problem within either the high voltage or the low voltage supply circuitry.

Over-Voltage Protection

The flyback sample pulse at diode CR232 is fed through Over Voltage adjustment R434 and VR434 to the base of Q532. If the flyback voltage goes above the allowable peak level, Q532 is turned on, which turns on Q533 and locks the collector of Q532 low. This output is connected to pin 9 of U445. When this input is pulled low, the error voltage input to the pulse width modulator comparator is pulled low, causing the high voltage supply to shut down. The Q532 output is also applied to the base of Q334. When Q353 turns on, Q334 is also turned on, which inhibits Q100 from turning on. This function also insures that the high voltage supply is shut down. The HV OVERLOAD indicator does not turn on when the high voltage supply is shutdown due to over voltage.

NOTE

Over Voltage adjustment R434 is preset at the factory and sealed. Do not defeat this seal or attempt to adjust the over-voltage limit.

Over-Current Protection

Integrated circuit U445 also provides current sensing for over-current protection of the +25 kV supply. The return path for the T100 secondary goes through P128 pin 1, R233, R333, Flash Rate adjustment R433, R444, and Current Limit adjustment R349 to ground. Resistors R444 and R349 form a current sample resistor. The voltage across R444 and R439 is applied to the inverting input (at pin 5) of the current limit comparator in U445. When the voltage approaches the current limit comparator's threshold level (approximately −200 mV) the comparator output begins to pull down on the error voltage input of the pulse width modulator comparator in U445. The falling error voltage reduces the duty cycle of the B+ supply reference and turns off the high voltage supply.

The flyback sample pulse from T100's link secondary is also fed through CR232, R332, Over Voltage adjustment R434, and R443 to the current sample resistors. Under normal operating conditions, this current opposes the anode current. When the high voltage supply begins to shut down, this current from the link secondary is also reduced, which has the effect of increasing the anode current through the current sensing resistors and raising the current limit sample voltage. The current limit comparator then pulls down harder on the error voltage line and causes the high voltage supply current to fold back. The Current Limit adjustment sets the threshold level of the current limit comparator and thus the anode current at which current limiting begins.

HV OVERLOAD indicator DS619 flashes to indicate the presence of an over-current condition. In this case, R233, R333, and Flash Rate adjustment R433 as well as R444 and R349 perform a current sensing function. As the anode current increases, the negative voltage at the anode of CR352 goes further negative, causing C351 to charge. When the voltage across C351 reaches the threshold voltage of DS251, DS251 fires, pulls down on the base of Q355, and turns on DS619 momentarily. If the over-current condition continues, C351 charges again and DS619 is again lit. If the current increases, C351 charges faster, causing DS619 to flash at a faster rate. Flash Rate adjustment R433 sets the anode current at which flashing of the HV OVERLOAD indicator begins. DS124 and DS123 provide surge protection for C121.

Static Focus Supply

The static focus supply circuit uses the 8.33 kV voltage from the tap of the high voltage secondary of T100 as a voltage source. Capacitors C254 and C255, and resistors R254-1, -2, -3, -4 and -5, R255 (part of the encapsulated filter-divider and feedback network) and Static Focus adjustment R260 filter this voltage source and allow the static focus output voltage to be adjusted to between +4.2 kV and +6.0 kV. This focus voltage is applied to the crt socket pin 9 through P260.

Dynamic Focus

The dynamic focus signal is added to the static focus supply voltage through R129, R261, and coupling capacitor C256 to create the focus output to the crt focus element. The dynamic focus signal and vertical retrace blanking pulse are applied to the Regulator board through P209 pins 2 and 4, respectively. Transistors Q328, Q332, Q327, and Q228 amplify the dynamic focus signal and apply it to the Focus board through P130 and P261. When the base of Q328 is pulled high, Q328 turns on, diverting current from Q332 and turning it off. Transistor Q327 is thus turned off, which turns on Q228 and pulls up on the dynamic focus output line. When the base of Q328 is pulled low, its collector goes high and Q332 is turned on. Then, Q327 is turned on harder, which turns off Q228 and causes the dynamic focus output line to be pulled down.

During vertical scan blanking, the vertical retrace blanking pulse goes high, which turns on Q331 and forces the output of Q327 low. With Q327 conducting heavily, the output of the dynamic focus line is pulled low.

Screen Grid (G2) Supplies

The screen grid supply circuit produces three separate supplies—Blue G2, Green G2, and Red G2—each of which can be adjusted over a range from +100 V to +500 V. Capacitors C512 through C515, C518, and diodes CR511, CR512, CR515, CR516, and CR517 (see Fig. 5-31) form a voltage multiplying circuit, which produces +400 V and +600 V voltage sources. The multiplying is accomplished through a parallel charge multiplier technique. When transistor Q304 is turned off, the +200 V supply charges C513, C514, C515, and C518 to +200 V. When Q304 turns on, its emitter is pulled to +200 V. Then, CR512 is reverse biased and the voltage across C513 and C518 is boosted to +400 V. When Q304 turns off, CR515 and CR517 are reverse biased and C514 is again charged to +200 V. Capacitor C515, however, now charges to +400 V. The next time Q304 is turned on, CR512 and CR516 are reverse biased, and the voltage across C518 is boosted to +600 V.

The +400 V supply is used in the dynamic focus circuit. The +600 V supply is applied to three voltage dividers,

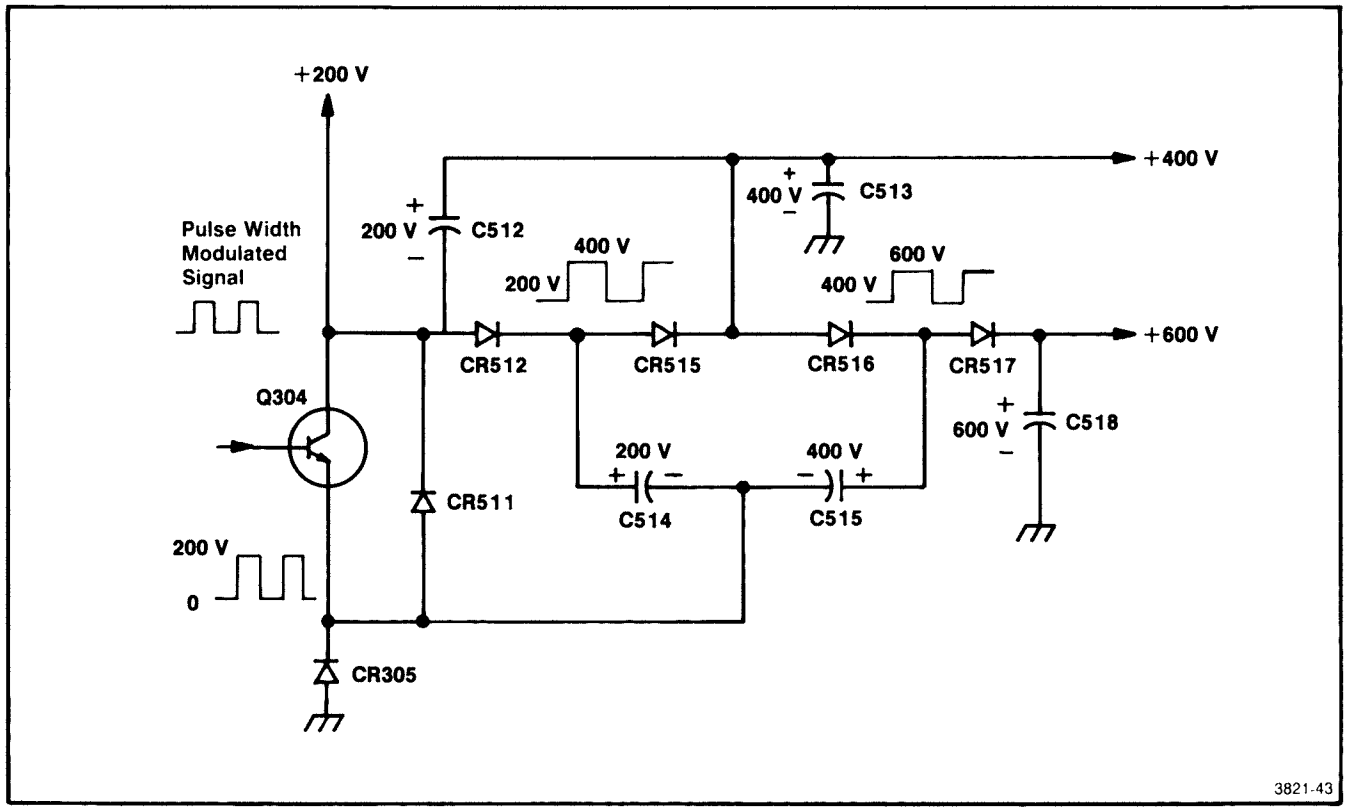

Fig. 5-31. Simplified schematic of screen grid (G2) supply circuit (parallel charge multiplier).

Screen (G2) Blue adjustment R138, Screen (G2) Green adjustment R148, and Screen (G2) Red adjustment R158, which allows individual adjustment of the three screen grids. The +400 V supply and the +600 V supply remain stable with changes in duty cycle or rate of the Q304 waveform.

LOW VOLTAGE POWER SUPPLY DIAGRAM 16

The low voltage power supply is a complex assembly located on three circuit boards: the Input board, A7A1A1, the Inverter board, A7A1A2 and the Output board, A7A1A3. It is a high efficiency, resonant switching supply that provides regulated low-voltage power sources to operate the instrument. The output transformer is mounted between the Input and the Output boards; a portion of the Input board contains output transformer secondaries and rectifiers.

The low voltage power supply provides only primary regulation (pre-regulation) of its output voltages. Each of the circuit boards in the instrument provides its own secondary regulation, when required.

Power Input

Power is applied through line filter FL101, fuse F101, POWER switch S100, RC418, and line selector P427. Line filter FL101 reduces the line interference entering or being conducted from the instrument, and RC418 reduces EMI on the power line. The POWER switch, which is located in the low voltage supply assembly, is push-rod actuated from the front panel. Connector P427 permits operation from either a 115 V nominal or a 230 V nominal line voltage source.

DEGAUSS switch S101 allows manual degaussing of the crt. Depressing S101 provides line voltage to degauss coil L139. Thermistor RT412 is a positive temperature coefficent thermistor. As it heats, it decreases the current through L139 to nearly zero. For 230 V operation, RT415 is placed in series with RT412 to keep the degaussing time constant nearly the same for both 115 V and 230 V operation.

With P427 in the 115 V position, CR239 and CR338 form a full-wave doubler. The voltage across C329 and C439 (wired in series) is approximately 325 V (two times the peak value of the line voltage). For 230 V operation, CR239, CR338, CR339, and CR435 form a bridge rectifier, which produces a voltage across C329 and C439 of approximately 325 V (one times the peak value of the line voltage). The dc voltage applied to the inverter is thus approximately the same for 115 V or 230 V operation. Resistors R338 and R435 equalize the voltage across C329 and C439 during 230 V operation.

Neon lamp DS312, part of relaxation oscillator C322, R319, and DS312, flashes when the filter capacitors are charged, indicating the presence of hazardous voltages in the low voltage power supply.

Thermistors RT239 (115 V and 230 V) and RT436 (230 V) limit surge current when power is initially applied to the instrument. Their resistance decreases as they heat. They thus have minimal affect on the circuit following power up.

When instrument power is switched off, the inverter circuit's oscillator stops oscillating and C329 and C439 are discharged slowly through R335 to provide surge current protection for the low voltage power supply until RT239 and RT436 have had sufficient thermal-recovery time.

WARNING

Because C329 and C439 discharge slowly, potentially dangerous voltages (i.e.,voltage above 42 volts) exist in the power supply for at least 5 minutes after the instrument is switched off. Neon lamp DS312 continues to flash until the voltage across C329 and C439 drops below approximately 70 V.

Spark gap electrodes E338 and E435 protect against surge voltage. When the Line Selector is in the 115 V position, only E338 is connected across the line input. If a 230 V source is accidentally applied when the Line Selector is in the 115 V position, E338 conducts and quickly opens F101.

Capacitors C329 and C439 are mounted on a shield that floats at a potential equal to the negative side of C329 (the connection is made through R142). The terminals of C329 and C435 are thus kept near the same potential as their mounting lugs for high potential testing, where the entire line circuit is raised from ground. Line power leakage to ground is prevented by providing only a capacitive path to ground.

Fuse F100 is mounted to the power supply heatsink. If opened, it indicates a problem in the inverter circuit. Transformer T215 is a common mode rejection transformer, which effectively isolates the inverter circuit from the power input circuit. Resistor R215 provides damping for T215.

Inverter

The inverter converts the dc voltage across C329 and C439 into an approximately 26 kHz sine-wave current to drive power transformer T315.

Transformers T225A and B, and transistors Q205 and Q305 form a free-running oscillator. Inductor L390 and capacitor C390 in conjunction with the T315 primary provide the series resonance for the circuit. Once the start network has started the oscillator, T225A provides base drive current to Q205 and Q305 to sustain oscillation. The polarity of T225A's windings causes Q205 and Q305 to switch alternately (i.e., only one transistor is on at a time). These transistors operate at a forced beta of four due to the turns ratio of T225A.

The switching action of Q205 and Q305 generates a square-wave voltage at the emitter of Q205 that is approximately equal in amplitude to the dc voltage at the input of the oscillator. This square-wave voltage supplies the drive necessary to maintain a sine-wave current in the series-resonant network of L390, C390, and T315. Diodes CR205 and CR109 provide reverse conduction paths across Q305 and Q205, respectively, when these transistors are held off for pre-regulation (low voltage power supply primary regulation).

The secondary of T225A is a center-tapped, 60-turn winding at diodes CR337 and CR338. It provides an input to the inverter circuitry for pre-regulation and fault protection. The cathodes of CR337 and CR338 are connected to the inverter control bus. When this bus is pulled to ground, it diverts drive current from the bases of the inverter switching transistors and holds them off. The hold-off period can be momentary for pre-regulation or prolonged for over-voltage or over-current protection.

Figure 5-32 provides a simplified schematic of the oscillator circuit, with Q205 and Q305 represented as switches. The three allowable states of the oscillator are: (a) Q205 is turned on (switch closed); (b) Q305 is turned on (switch closed); or (c) both transistors are held off for pre-regulation (both switches open). The current waveform in Fig. 5-32 shows the relative phase and amplitude of each component of the current, I(t), through T315, for periods Ta, Tb, Tc, and Td. Also shown is the relationship of the voltage at the emitter of Q205 and the inverter output voltage across the T315 primary with respect to the current waveform.

The operating sequence of the oscillator is as follows.

1. Assume that the current through T315 is passing through zero and increasing in a positive direction (beginning of period Ta). Both Q205 and Q305 are held off, and CR205 forward biased to conduct current Ia. As current through T315 increases, a positive drive current in T225A tries to turn Q205 on. The inverter control circuit, however, holds the T225A secondary to ground, keeping Q205 off.

2. Some time after zero crossing (beginning of Tb), the inverter control releases the T225 secondary and allows Q205 to turn on and conduct Ib, which in turn reverse biases CR205. Then, Q205 continues to conduct as Ib goes through its peak and back to zero.

3. At zero crossing (beginning of Tc), the inverter control again holds Q205 and Q305 off. During this hold-off time, CR109 conducts Ic.

4. When the inverter control again releases the T225 secondary, Q305 is turned on and begins conducting Id, which reverse biases CR109. Id then goes through its peak and back to zero, and the cycle repeats itself.

Pre-regulation of the low voltage power supply is thus achieved by varying the hold-off time (Ta and Tc) of Q205 and Q305, respectively, and thereby varying the peak current in the primary of T315.

Start Network. When power is applied to the instrument, a voltage is developed across R338 on the Input board that charges C108 and C390. When the charge on C108 reaches approximately 33 V, programmable unijunction transistor Q115 turns on. C108 then discharges through Q115 and turns on Q305. When Q305 turns on, it shock-excites series-resonant network L390 and C390, generating a damped oscillation. This damped oscillation provides the drive necessary to start the oscillator switching action. Once the oscillator has started, the signal at the emitter of Q205 (through CR106) keeps C108 discharged, disabling the start network.

Inverter Control

The inverter control circuitry provides primary regulation (pre-regulation) and fault protection for the low voltage power supply.

Pre-regulation. Inverter control U409 provides pre-regulation of the low-voltage power supply. Power is supplied to U409 from current source transformer T225B. Diodes CR436, CR438, CR439, and CR442 rectify this voltage. The positive side of the bridge supplies pin 6 of U409 with current to turn on an internal 7.5 V active zener diode. Divider R433, R438, and R441, connected to the negative side of the bridge through CR432, CR445, and CR446, holds the negative side of the bridge at approximately −2 V.

Integrated circuit U409 senses the voltage level of the +80 V supply at pin 15 through a voltage divider that con-

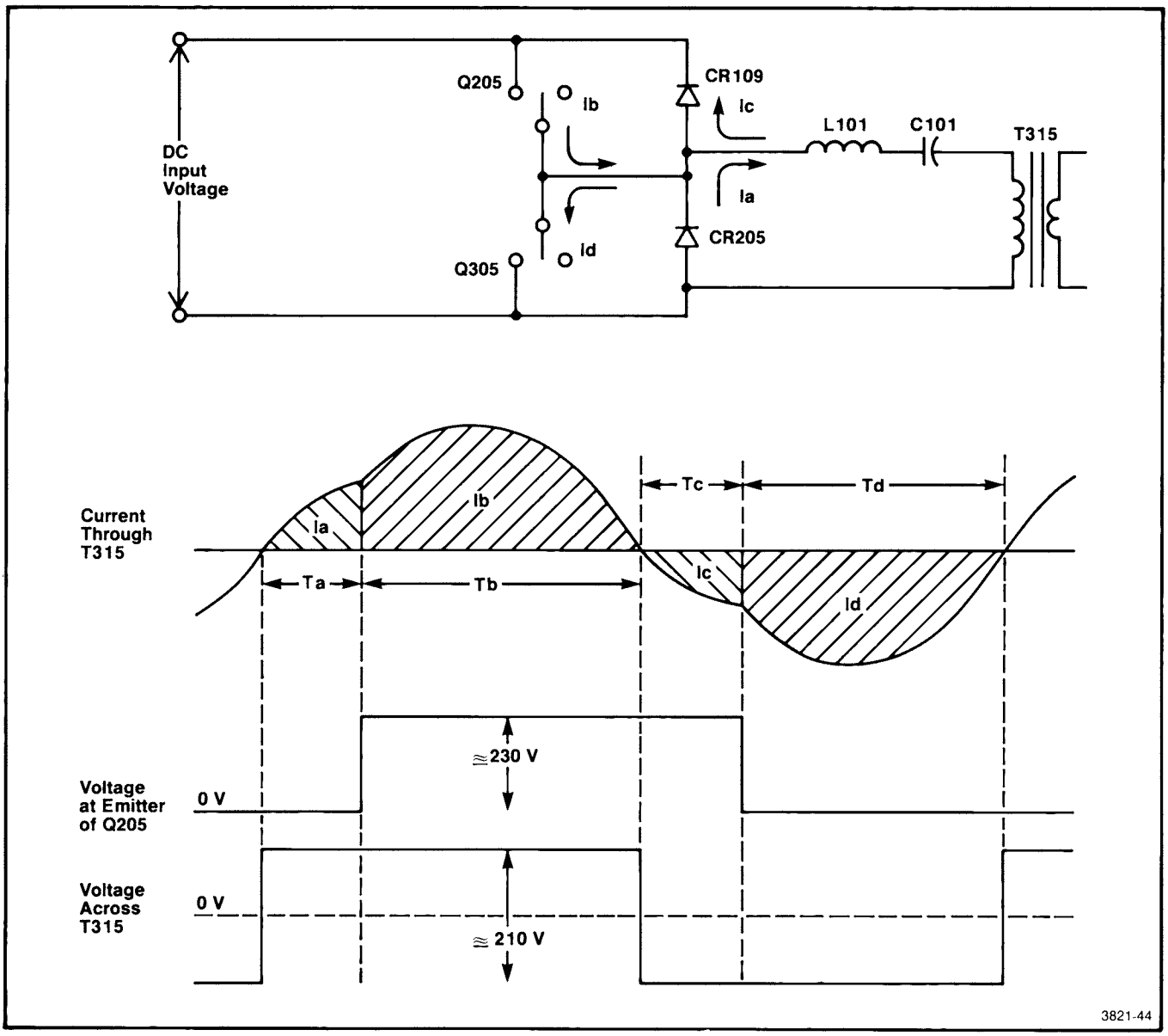

Fig. 5-32. Simplified schematic of inverter circuit and waveforms of current and voltage in the circuit.

sists of R365, R464, R465, and R361 in series with Low Voltage adjustment R462. When the current through T225B reverses (goes through zero), pins 10 and 11 of U409 trigger an internal flip-flop, which changes states and turns on Q322. When Q322 turns on, it pulls down on the control bus and inhibits the base drive to the inverter switching transistors. Timing capacitor C412 on pin 12 of U409 is then allowed to begin charging. When the charge across C412 reaches the voltage determined by pin 15 of U409, Q322 is turned off, the control bus is released, and one or the other of the inverter transistors is allowed to turn on.

Low Voltage adjustment R462 sets the level at pin 15 of U409, with respect to the +80 V supply, at which Q322 turns on and releases the control bus. It thus sets the output voltage of the +80 V supply. The turns ratio of T315 sets the output voltage of the other supplies.

Voltage Fault Protection. The inverter control provides two levels of voltage fault protection. The voltage null input to U409 (pin 2) senses variations in the +80 V, +8 V and −15 V supplies. If the voltage at pin 2 varies more than ±0.14 V, C415 begins charging. When C415 reaches +0.6 V, the inverter stop output of U409 (pin 8) is raised, which turns on Q335 and pulls the control bus to ground. As the low voltage supply begins to shut down, the voltage across C447 turns on Q319. Then, Q319 holds the control bus to ground until C447 discharges (approximately 0.5 second).

Volts Null adjustment R463 sets the balance point between the three supplies and ground, and thus determines the sensitivity of the null input.

Programmable unijunction transistor Q339 provides backup voltage limit protection for the instrument should U409 fail and cause excessively high voltages. The anode of Q339 is referenced to Low Voltage adjustment R462 through CR455 and CR356. Voltage divider R454 and R456 sets the voltage at the gate of Q339. If the −15 V supply at R454 goes negative enough to turn on Q339, Q338 is turned off, which turns on Q319. Then, Q319 shorts the control bus to ground. During normal operation, CR332 and CR435 rectify the signal on the control bus. The rectified voltage is stored in C447 and used to supply base drive for Q319 when it is conducting. Thus, Q319 holds the control bus at ground until C447 discharges.

Overcurrent Protection. The inverter control also provides two levels of overcurrent protection for the instrument. The rectified current from T225B flows through R441, a current sensing resistor. (Note that the negative return for the T225B supply bridge is through R441 and CR445, CR446, and CR432.) The I sense input to U409 (pin 13) is normally held positive through divider R433, R438, and R441. When excessive current flows through T225B and hence through R441, the voltage at pin 13 of U409 is pulled in a negative direction. When the voltage at pin 13 nears ground, C415 at pin 1 of U409 begins to charge. When the voltage on C415 reaches approximately +0.6 V, the inverter stop output of U409 (pin 8) is raised, which turns on Q335 and pulls the control bus to ground. As with the voltage null circuit, Q319 is turned on as the low voltage supply begins to shut down. Transistor Q319 then holds the control bus to ground until C447 discharges.

Transistors Q312 and Q315 provide surge current protection for the instrument. Because the base circuit impedance of the inverter transistors (Q205 and Q305) and the current ratios in T225A are known, the rectified secondary voltage at the cathodes of CR337 and CR338 is directly related to the primary current in the inverter transistors. When the primary current reaches approximately 15 A, the voltage on the control bus becomes high enough to cause VR405 to conduct. The current through VR405 provides base current to turn on Q315. When the collector current of Q315 reaches approximately 15 mA, Q312 starts conducting, which shorts the control bus to ground and removes the base drive from Q205 and Q305 for a number of cycles. As the primary current decreases, so does the collector current of Q315. When the collector current of Q315 drops below 40 mA, Q312 turns off, which removes the base drive of Q315, turning it off. This occurs before primary current reaches zero, so the inverter resumes normal operation.

Output

Since the voltage applied to the primary winding of T315 is regulated, no secondary regulation is necessary in the output circuitry. The ac voltage on each of the secondary windings is rectified, and a PI filter reduces ac ripple.

The Minimum Load connector, J402, is used with the 067-0998-00 Minimum Load Unit Calibration Fixture. This provides the minimum load necessary for the low voltage power supply to operate with some or all of the modules removed from the instrument, which facilitates the location of faulty modules. The +15 V supply is set to +15.3 V at pin 1 of J402 with all modules in place and the Minimum Load Unit Calibration Fixture not connected.

PERFORMANCE CHECK PROCEDURE

The procedure in this section of the manual may be used to verify that the 690SR mainframe is performing to specification. Most of the checks require access to test points, switches, and controls within the 690SR mainframe; therefore, the protective covers must be removed from the instrument.

NOTES

This procedure assumes that the internal jumpers are set to their factory-set positions and the instrument is connected for 115 V ac mains operation. Refer to Table 4-1 in Section 4 for a list of factory-set jumper positions.

The Perf. Ck. Step No. (Performance Check Step Number) column in the Electrical Characteristics tables of Section 3 lists the step numbers that are referenced to this Performance Check Procedure. The referenced step numbers in Section 3 enable the qualified service technician to quickly find the procedure that verifies a specific performance requirement.

The 690SR front-panel names used in this procedure are capitalized; e.g., CONTRAST. Internal controls and switches for the 690SR have only their first letter capitalized; e.g., Black Level Preset. Controls, switches, and connectors for the decoder interface module and test equipment also have only their first letter capitalized.

Recommended Test Equipment

Table 6-1 in this section lists the test equipment required for checking the performance of the 690SR. Capabilities of the test equipment are the minimum required to perform the test. If alternative equipment is substituted, it must meet or exceed the specification.

Table 6-1
RECOMMENDED TEST EQUIPMENT
(Includes Test Fixtures, Coaxial Cables, and Terminations)

Description of Equipment	Minimum Specification	Equipment Examples
Television Video Test Signal Generator	Generates full field color bar luminance signal, convergence crosshatch pattern flat field, field square wave, T pulse & bar, and a 20 MHz composite sweep signal (see topic Television Video Test Signal Generators for more details)	TEKTRONIX 1410/ SPG2/TSG1/TSP1 TSG3/TSG5/TSG6 NTSC Generator
Sine Wave Generator	Frequency: 20 MHz Amplitude: 5 V peak to peak into 50 Ω	TEKTRONIX SG 503 Sine Wave Generator in a Tektronix TM 503 Power Mainframe
Television Decoder Interface Module	For processing the composite video signal (see topic Video Decoder Interface Module for more details)	TEKTRONIX 69M00 NTSC Decoder
Linearity Graticule	Full screen film positive	See topic, Linearity Graticule.
High-Intensity Light Source	Light source positioned 30 inches away from front of the linearity graticule to project a shadow from the graticule onto the crt screen phosphor	Tensor-type reading lamp

Table 6-1 (cont)

Description of Equipment	Minimum Specification	Equipment Examples
Variable Autotransformer	Capable of 10 A at 103 Vac to 127 Vac	Superior Electric Powerstat Type VS116B
Digital Voltmeter	For measuring voltages up to 200 V; 4-1/4 digit LED display; accuracy 0.1% of reading ±2 counts; Input R: 10 MΩ	TEKTRONIX DM 501 Multimeter in a TEKTRONIX TM 503 Power Mainframe
Test Oscilloscope		
Mainframe	At least 50 MHz bandwidth with plug-in	TEKTRONIX 7603
Differential Comparator Plug-in	Minimum deflection factor 10 mV/div with a 10× probe	TEKTRONIX 7A13
Dual-Trace Amplifier Plug-in	At least 50 MHz bandwidth with test oscilloscope; minimum deflection factor: 50 mV/div with a 10× probe	TEKTRONIX 7A18
Dual Time Base Plug-in	Sweep rate: 2 ms/div to 100 ns/div	TEKTRONIX 7B53A
10× Probe (3 needed)	Matches input capacitance of test oscilloscope plug-ins—useful bandwidth at least 50 MHz; probe input capacitance: 13 pF to match impedance of 690SR high resolution crt; probe cable length: 2 meters	TEKTRONIX P6105
Photometer	For measuring luminance in foot lamberts and irradiance in $\mu W/cm^2$	TEKTRONIX J16 Digital Photometer with a J6503 Luminance Probe, J6502 Irradiance Probe, and a 016-0305-00 Light Occluder
Reference Light Source or Optical Comparator	For checking white colorimetry at Illuminant D 6500°	Grafikon, Hellige IRT, or Macbeth
50× Microscope	For measuring jitter (must contain an internal scale)	Peak Stand Micro 50×
Minimum Load Unit[a]	Provides a load for the 690SR power supply assembly	Tektronix Part No. 067-0998-00
Signal Adder	For adding a 10 MHz sine wave to a composite video signal	Must be constructed (see Fig. 6-1 for details)
2.5× Attenuator	For attenuating the 690SR signal when checking differential gain	Must be constructed (see Fig. 6-2 for details
Rigid Module Extender Card	For extending module assemblies so test points can be reached	Tektronix Part No. 067-0999-00
Flexible Interface Module Extender Cable	For extending the decoder interface module	Tektronix Part No. 067-1000-00

Table 6-1 (cont)

Description of Equipment	Minimum Specification	Equipment Examples
Coaxial Cable (Qty. 4)	Impedance: 75 Ω; length: 42 inches; equipped with bnc connectors	Tektronix Part No. 012-0074-01
Coaxial Cable	Impedance: 50 Ω; length: 42 inches; equipped with bnc connectors	Tektronix Part No. 012-0057-00
End-line Termination (Qty. 2)	Impedance: 75 Ω	Tektronix Part No. 011-0102-00
Feed-through Termination	Impedance: 75 Ω	Tektronix Part No. 011-0103-02
Color Television Degaussing Coil	Capable of demagnetizing the crt, chassis, and surrounding area	

[a]A Minimum Load Unit may be built from information (schematic and parts list) given in Fig. 8-3 in Section 8.

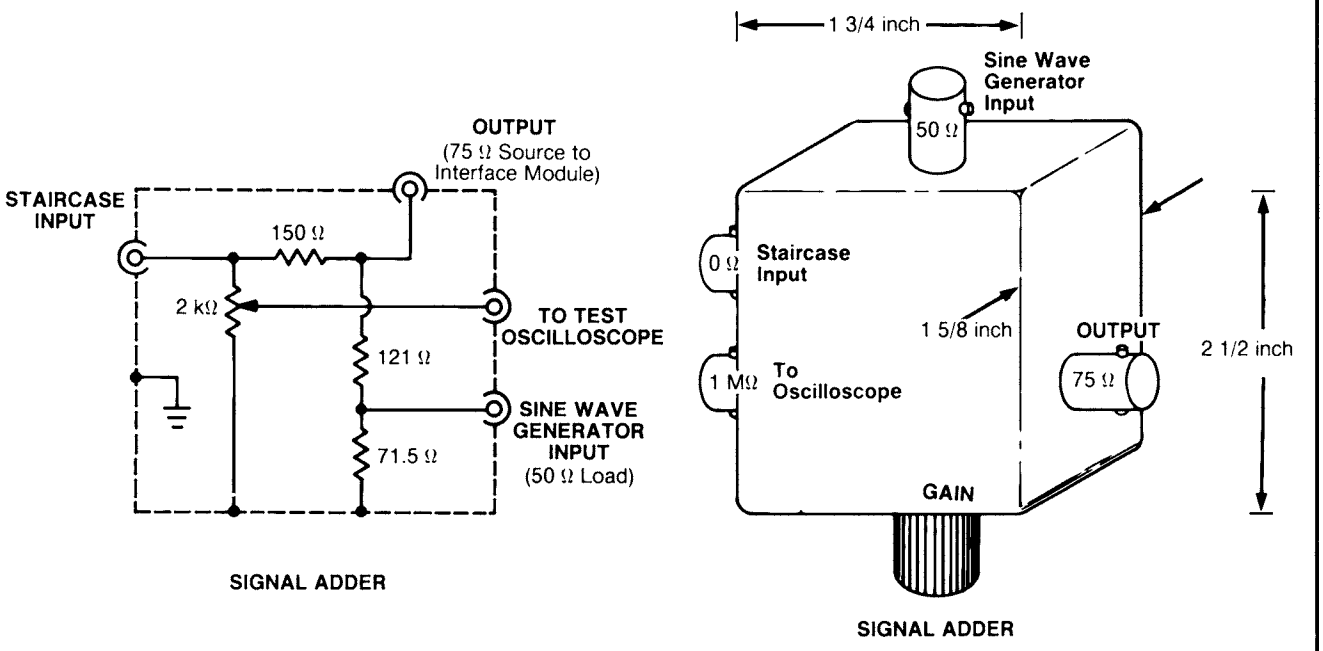

PARTS LIST

Qty.	Description	Tektronix Part No.
1	Accessory housing (without electrical components). Dimensions: Approximately 2-1/2 inch x 1-3/4 inch x 1-5/I8 inch.	
	Housing (without cover)	202-0230-00
	Cover	200-2083-00
4	Bnc female connectors	131-0106-00
1	Resistor, fixed, 150 ohms, 1%, 1/4 w	321-0114-00
1	Resistor, fixed, 121 ohms, 1%, 1/4 w	321-0105-00
1	Resistor, fixed, 71.5 ohms, 1%, 1/4 w	321-0083-00
1	Resistor, variable, linear, 2 kohms, composition	311-0608-00
1	Knob, for variable control	366-1660-00

3821-45A

Fig. 6-1. Construction details for the Signal Adder.

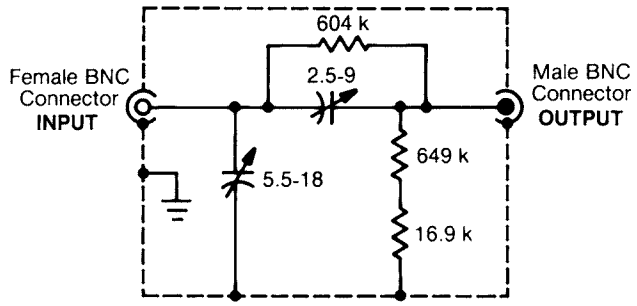

2.5X ATTENUATOR
(1 Megohm Input)

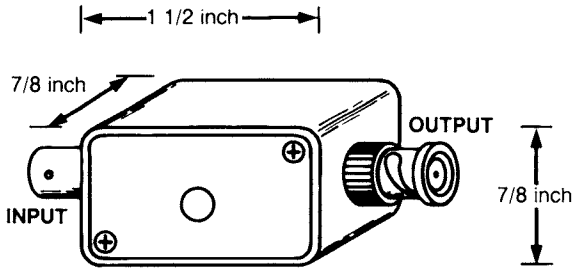

2.5X ATTENUATOR

PARTS LIST

Qty.	Description	Tektronix Part No.
1	Accessory housing (without electrical components). Equipped with bnc connectors. Dimensions: 1-1/2 inch x 7/8 inch x 7/8 inch.	011-0081-00
1	Capacitor, variable, ceramic, 2.5 pF to 9 pF	281-0122-00
1	Capacitor, variable, ceramic, 5.5 pF to 18 pF	281-0094-00
1	Resistor, fixed, 604 kohms, 1%, 1/4 w	321-0460-00
1	Resistor, fixed, 649 kohms, 1%, 1/4 w	321-0463-00
1	Resistor, fixed, 16.9 kohms, 1%, 1/4 w	321-0311-00

ADJUSTMENT PROCEDURE

1. **Connect the 2.5X attenuator OUTPUT connector directly to the vertical input of the test oscilloscope.**
2. **Connect the cable end of a properly-compensated 10X probe to the INPUT connector of the 2.5X attenuator.**
3. **Connect the 10X probe tip to the test oscilloscope calibrator output signal.**
4. **Adjust the compensating capacitors in the 2.5X attenuator for optimum square-wave response.**

3821-46

Fig. 6-2. Construction details for the 2.5× attenuator.

Television Video Test Signal Generator

Use a video test signal generator that will drive the television decoder interface module used with the 690SR mainframe. The generator should provide the following signals:

1. **Color Bars.** 75% amplitude color bar luminance (Y only) with 100% white bar. If NTSC standard is used, use 7.5% setup for the black level. If 50 Hz PAL or SECAM standard is used, use 0% setup for the black level.

NOTE

For 50 Hz PAL television standard, the subcarrier frequency must be 4.43361875 MHz.

2. **Convergence Crosshatch Pattern.** For more information, refer to the topic Linearity Graticule in this section of the manual.

3. **Flat Field.** 100% or 100 IRE and 10% or 10 IRE amplitudes. In addition, 0% amplitude is needed for PAL and SECAM standard.

4. **Field Square-Wave signal.**

5. **T Pulse and Bar.**

6. **20 MHz composite sweep signal.**

Examples of television video test signal generators are as follows:

Television Standard	Equipment Examples
NTSC	TEKTRONIX 1410 NTSC Generator with SPG2 Sync Generator, TSG1 Color Bar Generator, TSP1 Switcher with Convergence Generator, TSG3 Linearity Generator, TSG5 Pulse & Bar Generator, and TSG6 Multiburst Generator modules.
50 Hz PAL (4,43361875 MHz Subcarrier)	TEKTRONIX 1411 PAL Generator with SPG12 Sync Generator, TSG11 Colour Bar Generator, TSP11 Switcher with Convergence Generator, TSG13 Linearity Generator, TSG15 Pulse & Bar Generator, and TSG16 Multiburst Generator modules.
SECAM	TEKTRONIX 143 SECAM Test Signal Generator, TEKTRONIX 148 Insertion Test Signal Generator, and a TEKTRONIX 1411/SPG12/TSG16 Generator.

Television Decoder Interface Module

The television decoder interface module must be properly calibrated for driving the 690SR mainframe. Calibration can be quickly checked by using a test oscilloscope and 10X probe. Check setup level and video amplitudes at these 690SR input test points on the Video Amplifier board A13A1: TP531 (Red), TP330 (Green), and TP231 (Blue). Table 6-2 lists the setup level and video amplitudes for each television standard.

NOTE

A television RGB interface module can be used if RGB test signals are available.

Table 6-2
690SR VIDEO INPUT SIGNAL LEVELS

Television Standard	Signal Applied to Television Decoder Interface Module	690SR Video Input Signal Levels[a]
NTSC	7.5% setup (black)	0 V
	10% or 10 IRE flat field	19 mV
	100% or 100 IRE flat field (white)	700 mV
PAL or SECAM	0% setup (black)	0 V
	10% flat field	70 mV
	100% flat field (white)	700 mV

[a]Measured at TP531 (Red), TP330 (Green), and TP231 (Blue) on the 690SR Video Amplifier board A13A1.

Linearity Graticule

Use a linearity graticule that will match the television test signal generator crosshatch pattern. Select a linearity graticule from the following information:

Tektronix 14 x 17 Line Linearity Graticule, Tektronix Part No. 067-1054-00. For use with the TEKTRONIX 1410/SPG2/TSP1 NTSC Generator. This graticule can also be used with a TEKTRONIX 1410/SPG2/TSG2 NTSC Generator, TEKTRONIX 1411/SPG12/unmodified–TSG12 PAL Generator, TEKTRONIX 1900 NTSC Digital Generator, or a TEKTRONIX 143 SECAM Test Signal Generator.

Tektronix 15 x 20 Line Linearity Graticule, Tektronix Part No. 067-1055-00. For use with the TEKTRONIX 1411/SPG12/TSP11 PAL Generator. This graticule can also be used with a TEKTRONIX 1411/SPG12/TSG12 PAL Generator. Use a modified TSP11 or TSG12 module that generates a 15 x 20 line crosshatch pattern. Check with the Tektronix Service Center for information concerning this proposed modification.

PERFORMANCE CHECK PROCEDURE

Preliminary Procedure

A. Remove the dust covers from the 690SR.

B. Insert a decoder interface module into the 690SR mainframe.

C. Connect the 690SR power cord to the mains power source.

D. Connect a full field convergence crosshatch pattern to the decoder interface module Video Input A connector. Connect a 75 Ω end termination to the Video Input A loop-through connector. See Fig. 6-3.

E. Use Fig. 6-3 as a guide for setting the front-panel controls of the equipment.

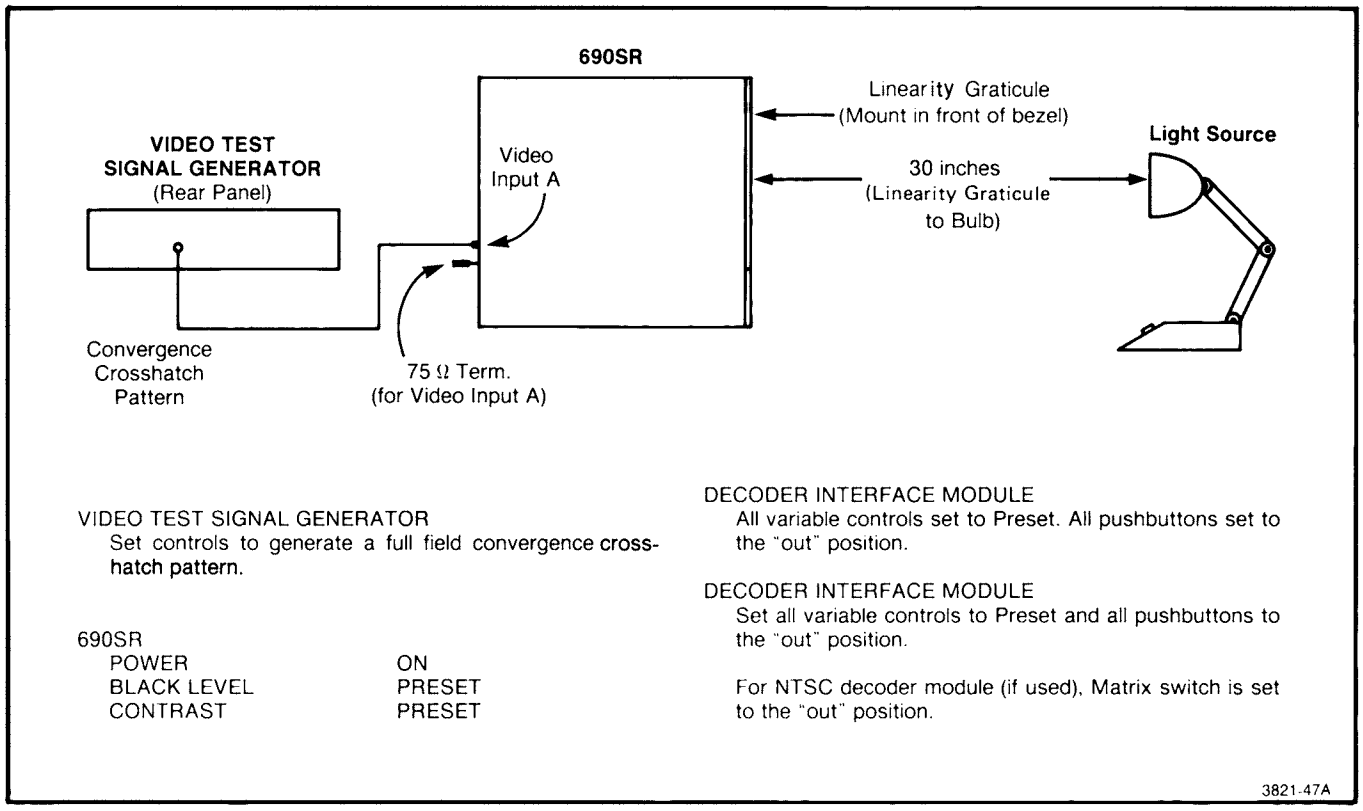

Fig. 6-3. Initial equipment setup conditions for step 1.

F. Allow the equipment to warm up for at least 45 minutes.

G. Degauss the 690SR and surrounding area using a color television degaussing coil.

NOTE

Use the Service Illustration pullout pages in Section 12 to find the locations of test points.

1. Check Aspect Ratio, Geometric Distortion, and Incremental Linearity

a. Use the same equipment setup conditions and front-panel control settings as shown in Fig. 6-3. Check that the linearity graticule is mounted directly to the front of the bezel of the 690SR and properly centered. Use the corner markings on the graticule as a guide for proper alignment. Figure 7-22B in Section 7 shows the linearity graticule in use.

b. Check that the high-intensity light source is positioned exactly 30 inches away from the center of the linearity graticule that is mounted on the bezel of the 690SR. Carefully check that the light source is properly centered with respect to the center of the faceplate. If the linearity graticule is properly positioned, the edges of the small circles that are projected by the light source will coincide with the left and right inside edges of the bezel. See Fig. 7-22B in Section 7.

c. Set the video test signal generator convergence Vertical and Horizontal Position controls so that the 14 x 17 or 15 x 20 lines are centered within the convergence crosshatch pattern. Use the 690SR Size controls (R825 and R925) on A8A1 or the interface module underscan mode to check that the pattern is properly centered.

d. Check that the H Size (R925) and Vertical Size (R825) controls on the Convergence Control board, A8A1, are set fully clockwise. Use the H Position (R920) and Vertical Position (R820) controls to align the display with the linearity graticule. If the size of the picture is incorrect within ±3% (0.43 inch), refer to steps 20h and 23d in Section 7 Adjustment Procedure to obtain a full size display.

e. CHECK—that the convergence pattern display matches the size of the linearity graticule. Since the linearity graticule is designed to yield an aspect ratio of 4:3, the display aspect ratio will also be 4:3.

f. CHECK—geometric distortion. Linearity inside the control circle bounded by screen height must be within ±1% (0.11 inch or 0.279 cm) of their proper position. Linearity outside the control circle must be within ±1.5% (0.17 inch or 0.42 cm) of screen height.

g. CHECK—incremental linearity. Each division of the crosshatch pattern should appear the same distance apart. A division should be within ±7% of its nominal value. For NTSC and SECAM crosshatch patterns, each division is 0.898 inch (7% of 0.898 inch equals 0.063 inch, or 0.16 cm). For 50 Hz PAL, each division is 0.756 inch, or 1.92 cm, (7% of 0.756 inch is 0.053 inch, or 0.13 cm). As a comparison, the radius inside the small circles of the linearity graticule is 0.11 inch or 0.28 cm, one half the radius is 0.055 inch or 0.14 cm.

h. Turn off the light source and remove the linearity graticule.

2. Check Orthogonality and Convergence

a. Use the same setup conditions as shown in Fig. 6-3, except the light source and linearity graticule are not needed.

b. Check that the convergence crosshatch pattern is displayed on the face of the 690SR crt.

c. CHECK—orthogonality. Use a protractor with a straight-edge extension to measure the angle of the crosshatch lines that intersect at the center of the display. The angle of the intersecting lines should be 90° within a tolerance of one degree.

d. CHECK—convergence. Maximum allowed misconvergence is 0.5 mm when measured from the center of one displayed signal to the center of the same signal displayed in another color. This definition is important, since all three beams do not always focus to the same beam width.

3. Check Contrast Control and Preset Ranges

a. Use the same equipment setup conditions and front-panel control settings as shown in Fig. 6-4.

b. Decrease the room lighting to a very low level.

c. Depress the J16 Digital Photometer X.1 push button. With no light entering the J6503 Luminance Probe, zero the J16.

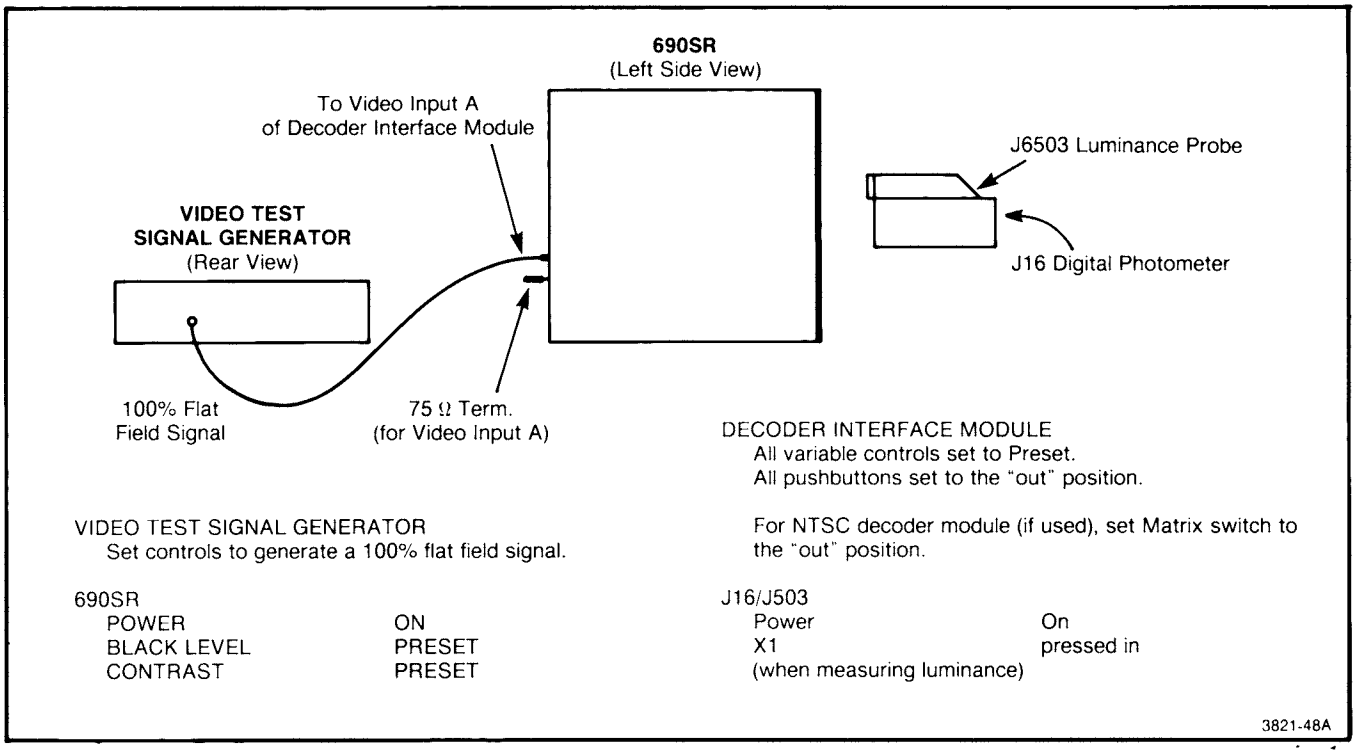

Fig. 6-4. Equipment setup conditions for step 3.

d. Depress the J16 X1 push button. Place the J6503 Luminance Probe close to the 690SR crt faceplate at the center of the screen.

e. Rotate the 690SR front-panel CONTRAST control clockwise until one of the video channels just barely limits.

f. CHECK—that the J16 readout is 62 foot lamberts or higher.

g. Rotate the CONTRAST control counterclockwise to the "just out of detent (PRESET)" position.

h. CHECK—that the J16 readout is 6 foot lamberts or less.

i. Return the CONTRAST control to its PRESET position.

j. Note the reading of the J16 Photometer. (The reading should be 30 foot lamberts, as set at the factory.)

k. Rotate the Contrast Preset (R911) adjustment on the Convergence Control board, A8A1, clockwise until one of the video channels barely limits.

l. CHECK—that the J16 reading is 50 foot lamberts or more.

m. Rotate the Contrast Preset (R911) adjustment fully counterclockwise.

n. CHECK—that the J16 reading is 10 foot lamberts or less.

o. Return the Contrast Preset (R911) adjustment to the reading noted in part j of this step. (If you are uncertain where R911 was set originally, perform parts a through d of step 29 in Section 7, Adjustment Procedure.)

4. Check Black Level Control and Preset Ranges

a. Continuing from step 3, check that the equipment setup conditions are the same as shown in Fig. 6-4. The

control settings are the same as given in Fig. 6-4 except as follows: Set the video test signal generator controls to obtain a 7.5 IRE flat field output signal for use with the NTSC television standard. A 7.5% IRE flat field signal can be obtained from a NTSC color bar generator. For PAL and SECAM, use a 0% flat field signal.

b. Depress the J16 Photometer X.1 push button. Check that the J6503 Luminance Probe with its light occluder is placed against the 690SR crt faceplate at the center of the screen.

c. Rotate the 690SR front-panel BLACK LEVEL control fully clockwise.

d. CHECK—that the J16 readout is 1.5 foot lamberts or more.

e. Rotate the BLACK LEVEL control counterclockwise to the "just out of detent (PRESET)" position.

f. CHECK—that the J16 readout is zero.

g. Return the BLACK LEVEL control to its PRESET position.

h. Note the setting of the Black Level Preset (R905) adjustment on the Convergence Control board, A8A1, by using the J16 Photometer with a J6502 Irradiance Probe and a light occluder to measure the light level.

NOTE

The J16/J6502 Irradiance Probe with a light occluder is used for parts h and m only of this step. The J16/J6503 Luminance Probe is used in parts b, d, f, j, and l.

i. Rotate the Black Level Preset (R905) adjustment fully clockwise.

j. CHECK—that the J16 readout is 1.5 foot lamberts or more.

k. Rotate the Black Level Preset (R905) adjustment fully counterclockwise.

l. CHECK—that the J16 readout is zero.

m. Return the Black Level Preset (R905) adjustment to the setting noted in part h of this step. (If you are uncertain where R905 was set originally, perform parts a through d of step 27 in Section 7, Adjustment Procedure.)

5. Check White Colorimetry

a. Use Fig. 6-4 as a guide for the equipment setup conditions and control settings except as follows: Use an optical comparator instead of the J16/J6503 Photometer.

b. Check that the room lighting is set to a low level.

c. Depress the 690SR DEGAUSS button for at least 5 seconds.

d. Set the optical comparator to 30 foot lamberts. Hold the optical comparator so the light pipe is placed against the 690SR crt faceplate at the center of the screen.

NOTES

If the optical comparator cannot be set as high as 30 foot lamberts, decrease the generator flat field output signal level (or use a detentable attenuator) to be within the highest light output setting of the optical comparator.

If the ambient light in the room affects the test spot, use a black paper mask to eliminate ambient light.

e. CHECK—that the color of the test spot with all beams on matches the color of the optical comparator reference field.

f. Remove the optical comparator.

6. Check Raster Size Change Due to Changes in Anode Current

a. Use Fig. 6-4 as a guide for the equipment setup conditions and control settings, except as follows: Set the video test signal generator controls so the output is a field squarewave signal.

b. Depress the J16 Digital Photometer X1 push button. Place the J6503 Luminance Probe close to the 690SR faceplate at the center of the screen.

c. Rotate the 690SR front-panel CONTRAST control to obtain a reading of 62 foot lamberts for a high-resolution crt; 72 foot lamberts for a medium resolution crt (Option 25). These readings are equivalent to 1 mA crt anode current.

d. Remove the J16/J6503 Photometer from the crt faceplate.

e. Insert a 75 Ω 10X attenuator in series between the Video Input A connector on the decoder interface module and the coaxial cable from the generator.

f. Mount the linearity graticule in front of the 690SR bezel and turn on the light source as illustrated in Fig. 6-3.

g. Rotate the H Size control (R925) on the Convergence Control board, A8A1, until the left and right edges of the field square wave are aligned within the small graticule circles at the left and right edges of the linearity graticule.

h. Turn the 690SR front-panel BLACK LEVEL control fully clockwise. Rotate the H Position control (R920) on A8A1 so the left and right edges of the square-wave signal are centered within the small circles at the left and right edges of the linearity graticule.

i. Note the straightness of the left and right edges of the field square-wave display for use as a reference.

j. Remove the attenuator and connect the coaxial cable directly to the Video Input A connector on the decoder interface module.

k. CHECK—the amount of bowing or bulging of the left and right edges of the field square-wave signal. Performance requirement: Less than 2% total (1% on each side) of screen height. This is equivalent to 0.22 inch (0.56 cm).

l. Return the BLACK LEVEL and CONTRAST controls to the PRESET position.

m. Turn off the light source and remove the linearity graticule.

7. Check Mains Frequency Interference

a. Use the same equipment setup conditions and control settings as shown in Fig. 6-5. Check that the room lighting is set to a low level.

b. Set the 690SR front-panel CONTRAST control just out of the PRESET position.

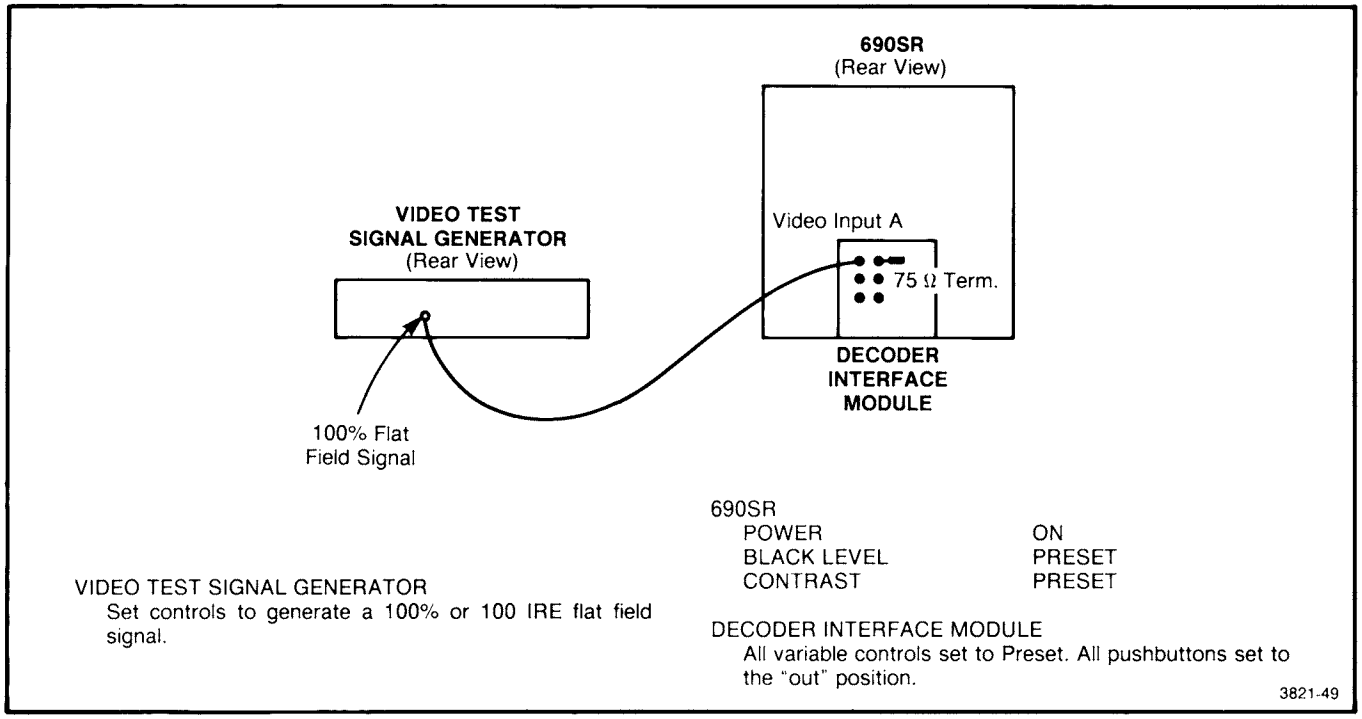

Fig. 6-5. Initial setup conditions for step 7.

c. CHECK—for any mains frequency interference on the display.

d. Return the CONTRAST control to the PRESET position.

8. Check Horizontal Jitter and Vertical Interlace Jitter

a. Use Fig. 6-5 as a guide for the equipment setup conditions and front-panel control settings, except use a convergence crosshatch pattern signal.

b. Set the 690SR Blue (S602) and Red (S612) Screen switches to the Off position so that only the green beam is on.

c. CHECK—Using a 50X microscope with a scale, measure the amount of horizontal peak-to-peak jitter. Horizontal jitter must be less than 0.05% of screen width. This amount is equivalent to 0.0074 inch or 0.19 mm. (Each minor division of the Peak Stand 50X microscope equals 0.02 mm.) Use the scale to determine the width of a phosphor dot. Then, use the phosphor dot as a measurement aid. Use Fig. 6-6 as a guide for measuring jitter.

d. CHECK—Using the 50X microscope, measure the amount of vertical peak-to-peak jitter. The performance requirement for vertical jitter is 0.03% of screen height. This amount is equivalent to 0.0033 inch or 0.084 mm. Use Fig. 6-6 as a guide by turning the illustration 90°.

e. Remove the microscope. Set the Blue and Red Screen switches to On.

9. Check Vertical Positioning Range

a. Use Fig. 6-7 as a guide for equipment setup conditions and front-panel control settings.

b. Connect the test oscilloscope Ch 1 10X probe to TP675 on the Convergence Control board, A8A1. (TP675 is located under the P470 ribbon cable on earlier instruments.)

NOTE

The test oscilloscope Ch 2 10X probe is not used in this step.

c. Rotate the test oscilloscope Variable Time/Div control so the linear portion of the vertical ramp occupies 8 horizontal divisions. Use Fig. 7-10 in Section 7 of the Adjustment Procedure as a guide.

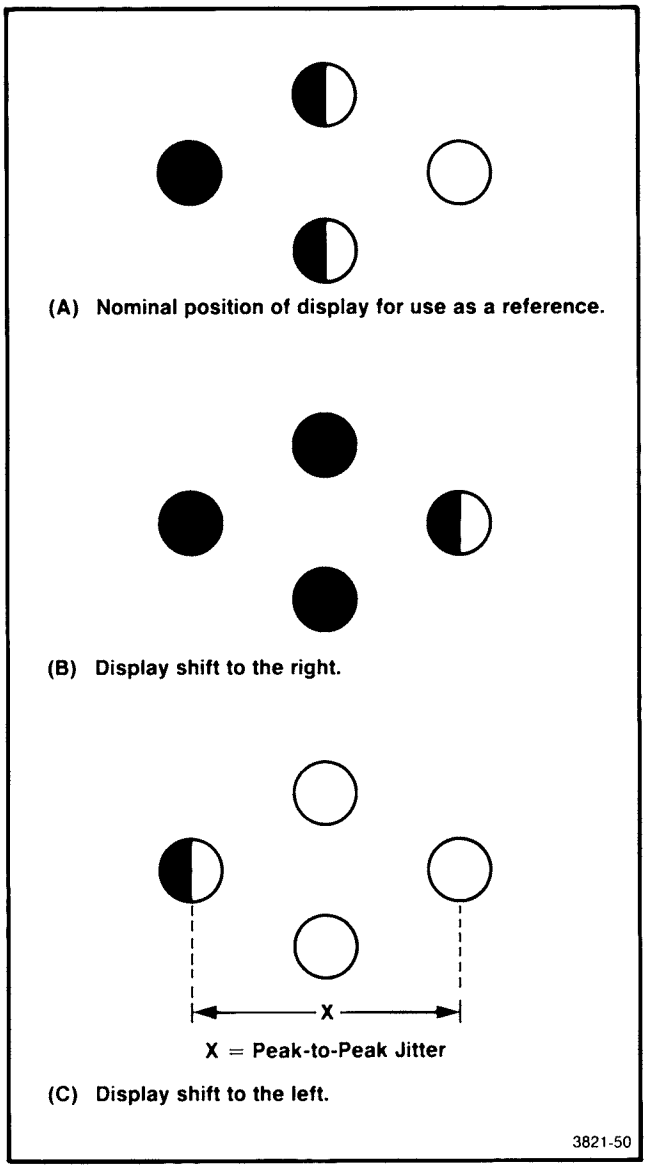

Fig. 6-6. Measuring peak-to-peak jitter. Shaded area indicates illuminated phosphor.

d. Turn the Vertical Position control (R820) on the Convergence Control board, A8A1, so that the center of the linear ramp is 0 V.

e. Note the location of a horizontal crosshatch line at the center of the crt for use as a reference. (If desired, use a grease pencil to mark the location of the line.)

f. CHECK—Rotate the Vertical Position control (R820) fully counterclockwise. Use a plastic ruler to measure the distance that the reference crosshatch line moved. Rotate the Vertical Position control fully clockwise and measure the distance the reference crosshatch line moved with respect

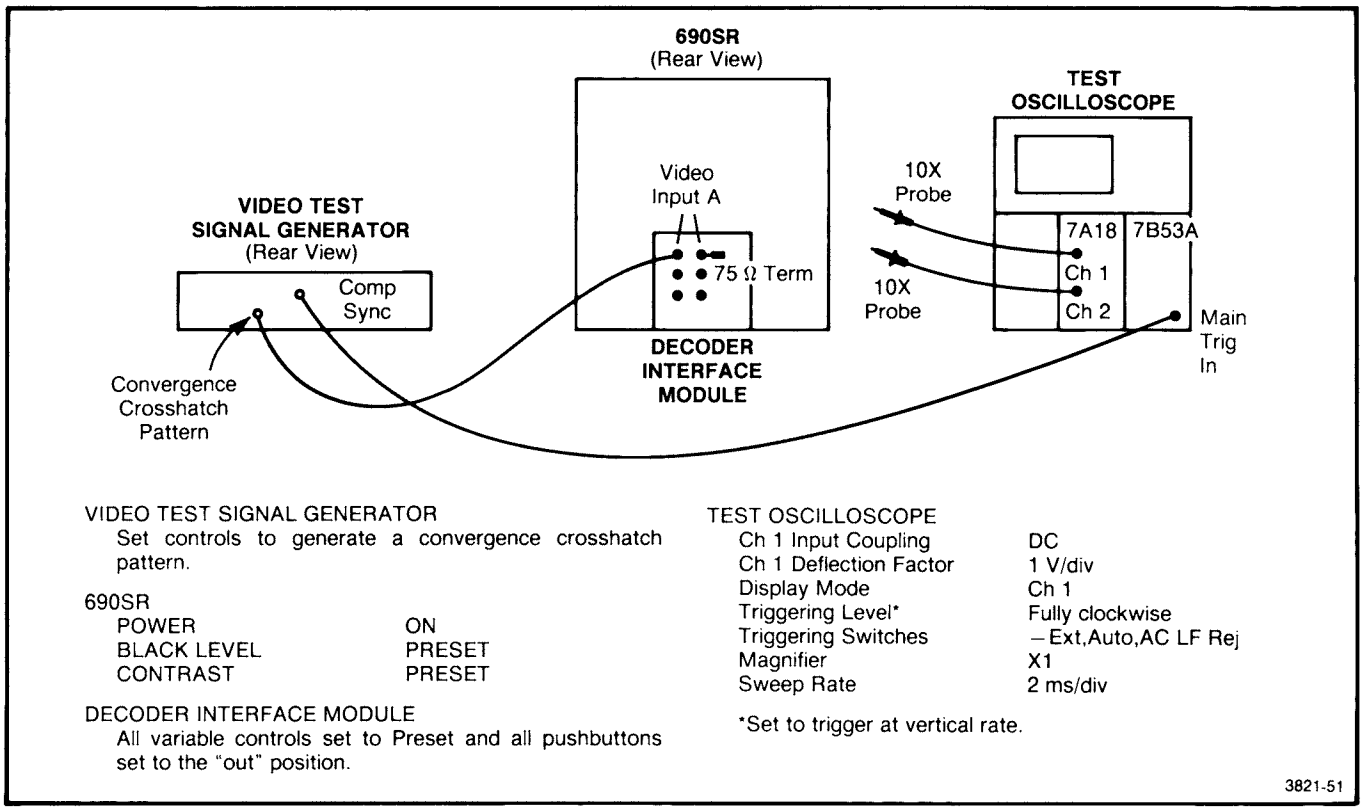

Fig. 6-7. Equipment setup conditions for checking vertical positioning range.

to the location noted in part e of this step. The vertical positioning range must be at least ±6% of the screen height. This is equivalent to a distance of ±0.66 inch or ±1.68 cm.

g. Return the Vertical Position control to the setting described in part d of this step.

h. Disconnect the test oscilloscope probe from the test point.

10. Check Vertical Scan Start Jitter

a. Use Fig. 6-8 as a guide for equipment setup conditions and control settings. Set the 690SR POWER switch to OFF. Extend the the raster control assembly, A9. Set the 690SR POWER switch to ON.

b. Connect the test oscilloscope Ch 1 10X probe to TP930 on A9A1. Connect the Ch 2 10X probe to TP940 on A9A1. These test points are accessible from the bottom of the raster control assembly, A9.

c. Set the test oscilloscope Triggering Level control to trigger on the falling edge of TP930 vertical trigger signal. Figure 6-9A shows the displayed waveforms.

d. Set the test oscilloscope delayed sweep rate to 2 μs/div and use the Delay Time Multiplier control to position the falling edge of TP940 waveform to graticule center. Set the Magnifier to X10 and position the falling edge of TP940 waveform into view as shown in Fig. 6-9B.

e. CHECK—TP940 waveform jitter. Vertical scan start jitter must be less than 400 ns peak to peak with respect to the vertical trigger edge. The TP940 waveform shown in Fig. 6-9B meets this requirement.

f. Disconnect the 10X probes from the test points on the raster control assembly.

g. Set the 690SR POWER switch to OFF and remove the rigid module extender card. Reinstall the raster control assembly in the mainframe and set the 690SR POWER switch to ON.

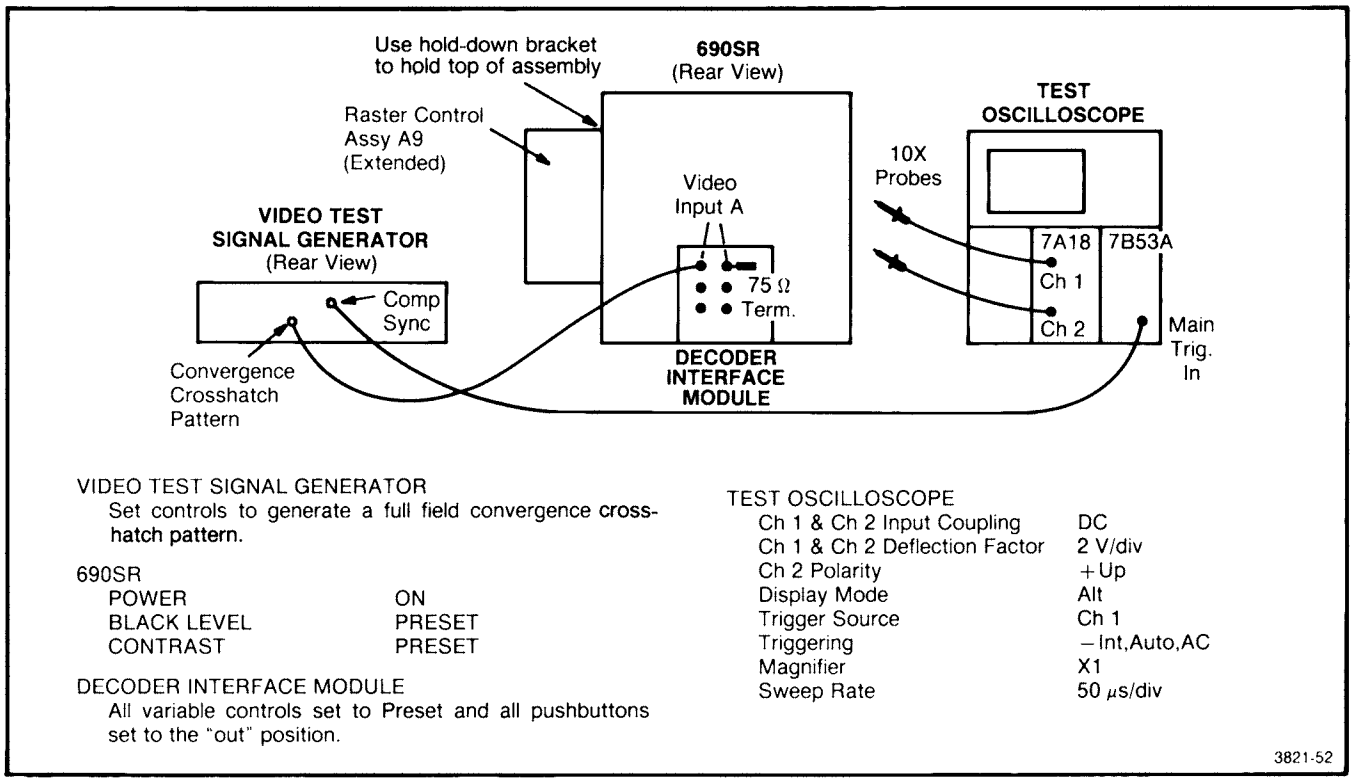

Fig. 6-8. Equipment setup conditions for checking vertical scan start jitter.

11. Check Reference Input Signal

a. Use Fig. 6-10 as a guide for equipment setup conditions and control settings. Note that the video amplifier assembly, A13, is opened to a horizontal position for access to the test points. Check that the NTSC decoder interface module, if used, Matrix switch is set to the Out position.

b. Connect the test oscilloscope Ch 1 10X probe to the red amplifier input TP531 on the Video Amplifier board, A13A1.

NOTE

The test oscilloscope Ch 2 10X probe is not used in this step.

c. CHECK—that the black level (setup) is at 0 V within ±10 mV and the white level is at +0.7 V within ±28 mV as shown in Fig. 6-11.

d. CHECK—move the Ch 1 10X probe to the green amplifier input TP330 on A13A1 and repeat part c of this step.

e. CHECK—move the Ch 1 10X probe to the blue amplifier input TP231 on A13A1 and repeat part c of this step.

f. Disconnect the 10X probe from TP231. Leave the video amplifier assembly in the open position.

12. Check Vertical Retrace Blanking

a. Use Fig. 6-10 as a guide for the equipment setup conditions and control settings except for the following:

Test Oscilloscope

Ch 1 Deflection Factor	10 V/div
Triggering Level	Fully clockwise
Sweep Rate	2 ms

b. Connect the test oscilloscope Ch 1 10X probe to TP337 (red) on the CRT Socket board, A12. Connect the probe ground lead to TP425 on A12.

NOTE

The test oscilloscope Ch 2 10X probe is not used in this step.

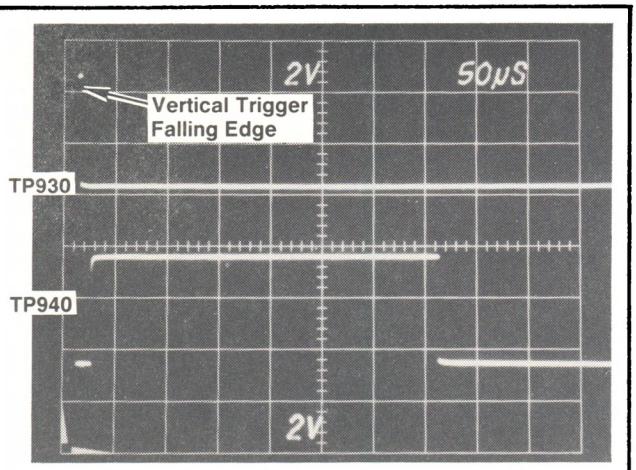

(A) Waveforms displayed at a sweep rate of 50 μs/div.

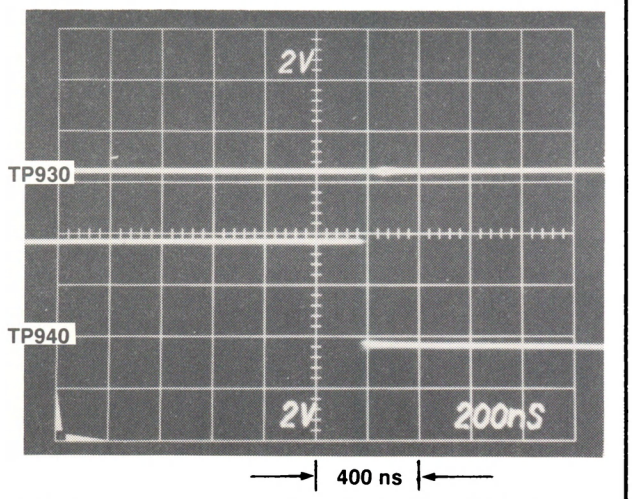

(B) Sweep rate changed to 200 ns/div. Maximum allowable jitter for TP940 waveform is less than 400 ns with respect to TP930 vertical trigger falling edge.

3821-53

Fig. 6-9. Measuring vertical scan start jitter.

c. Set the 690SR White Pedestal switch, S720, on the Convergence Control board, A8A1, to On.

d. Check that the test oscilloscope time base is triggered at the vertical rate. Set the delayed sweep rate to 100 μs/div, and use the Delay Time Multiplier to intensify the vertical interval. Press in the Dly'd Sweep knob to display the vertical sync interval as shown in Fig. 6-12.

e. CHECK—that the vertical retrace blanking time is 500 μs within a tolerance of ±10% or ±50 μs. See Fig. 6-12.

NOTE

This check is tighter than the performance requirement to allow adequate settling time for the dynamic focus and horizontal B+ amplifiers at the end of vertical blanking.

f. Set the White Pedestal switch, S720, on the Convergence Control board, A8A1, to the Normal position.

g. Disconnect the Ch 1 10X probe from the test point.

13. Check Horizontal Retrace Blanking

a. Use Fig. 6-10 as a guide for the equipment setup conditions and control settings except as follows:

Test Oscilloscope

Ch 1 Deflection Factor	1 V/div
Sweep Rate	1 μs/div

b. Connect the test oscilloscope Ch 1 10X probe to TP609 on the Video Amplifier board, A13A1.

NOTE

The test oscilloscope Ch 2 10X probe is not used in this step.

c. CHECK—that the pulse width is less than 6.50 μs at the +1 V amplitude level with respect to ground. See Fig. 6-13.

NOTE

This check is tighter than the performance requirement to allow for the response time of the video amplifier to the blanking signal.

d. Disconnect the Ch 1 10X probe from the test point.

14. Check Triggered Horizontal Timing

a. Use Fig. 6-10 as a guide for the equipment setup conditions and control settings except as follows:

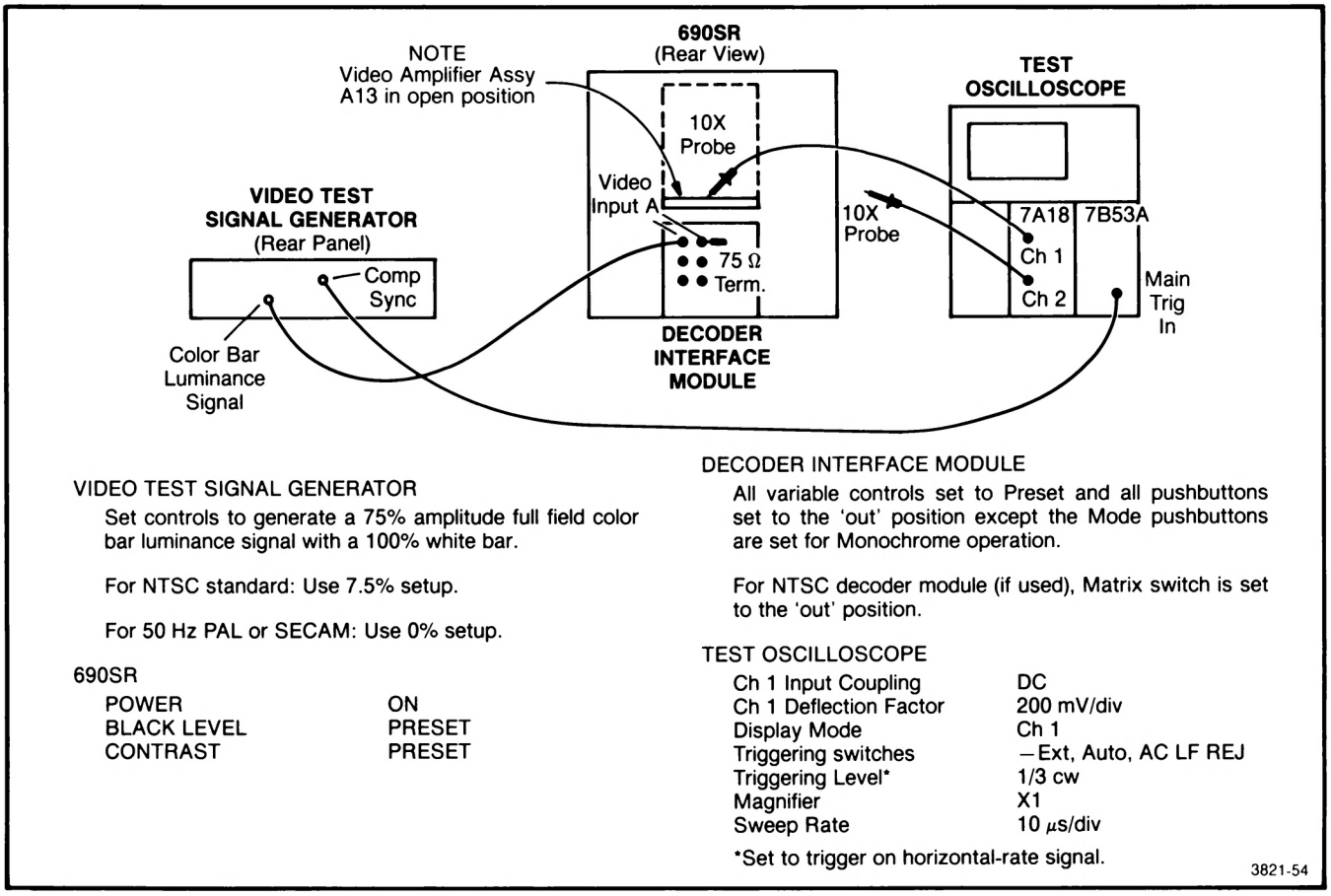

VIDEO TEST SIGNAL GENERATOR

Set controls to generate a 75% amplitude full field color bar luminance signal with a 100% white bar.

For NTSC standard: Use 7.5% setup.

For 50 Hz PAL or SECAM: Use 0% setup.

690SR

POWER	ON
BLACK LEVEL	PRESET
CONTRAST	PRESET

DECODER INTERFACE MODULE

All variable controls set to Preset and all pushbuttons set to the 'out' position except the Mode pushbuttons are set for Monochrome operation.

For NTSC decoder module (if used), Matrix switch is set to the 'out' position.

TEST OSCILLOSCOPE

Ch 1 Input Coupling	DC
Ch 1 Deflection Factor	200 mV/div
Display Mode	Ch 1
Triggering switches	−Ext, Auto, AC LF REJ
Triggering Level*	1/3 cw
Magnifier	X1
Sweep Rate	10 μs/div

*Set to trigger on horizontal-rate signal.

3821-54

Fig. 6-10. Equipment setup conditions for checking the reference input signal.

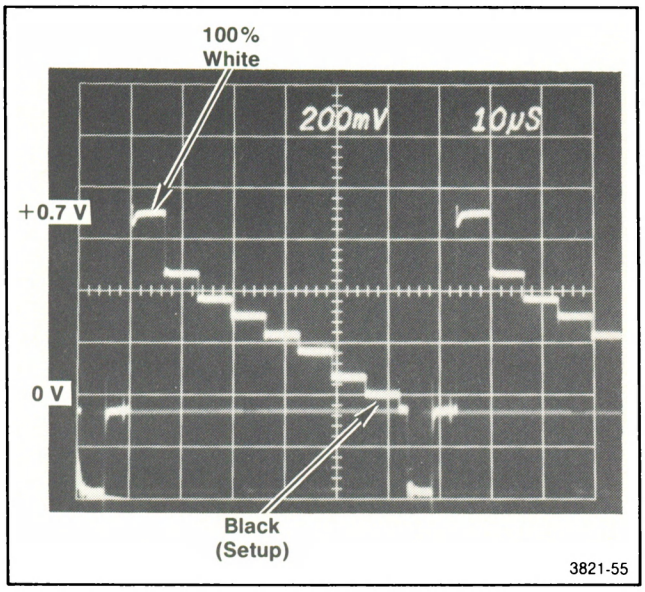

Fig. 6-11. Checking the reference input signal dc levels.

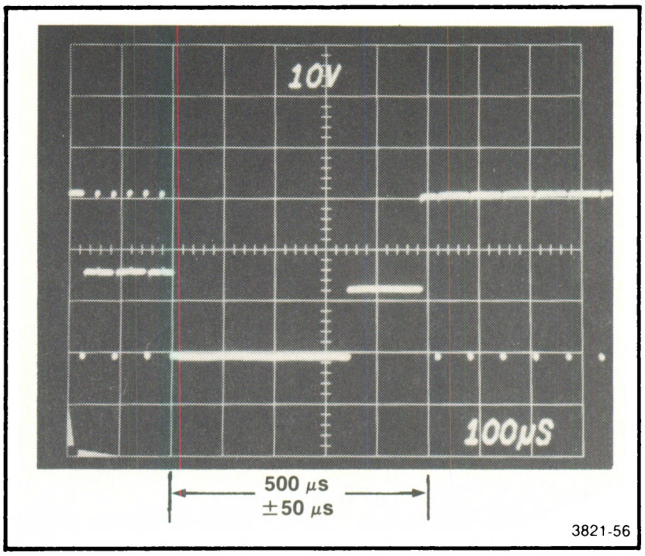

Fig. 6-12. Measuring vertical retrace blanking time at TP337 (Red) on A12.

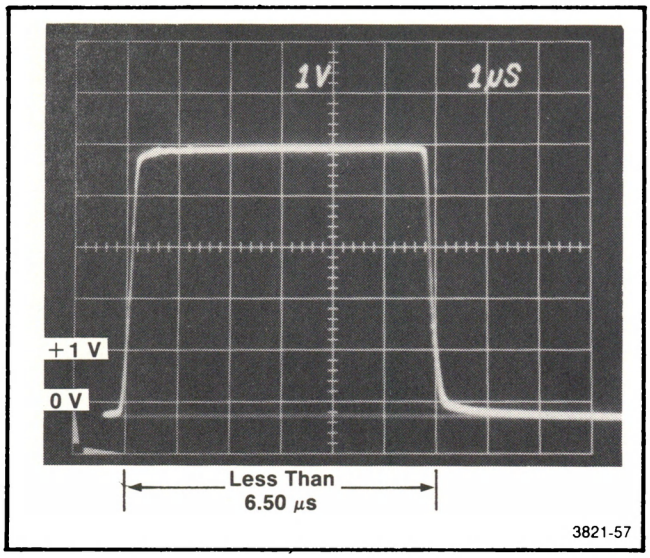

Fig. 6-13. Measuring horizontal retrace blanking pulse width at TP609 on A13A1.

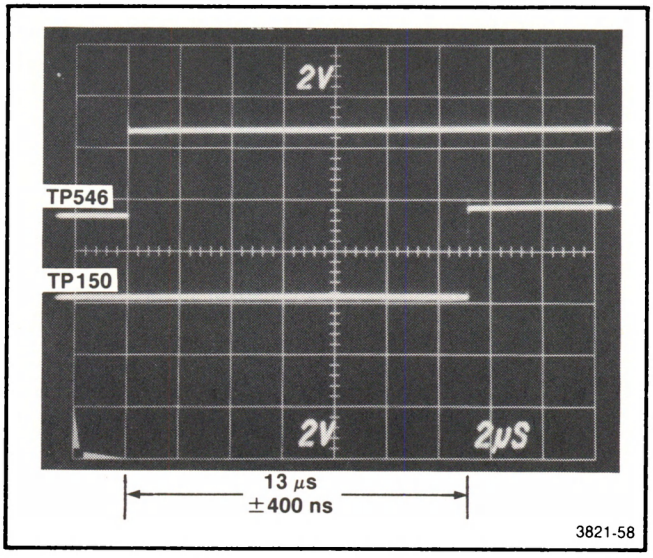

Fig. 6-14. Measuring triggered horizontal timing.

Test Oscilloscope

Dual-Trace Amplifier	
Ch 2 Input Coupling	DC
Ch 1 & Ch 2 Deflection Factor	2 V/div
Ch 2 Polarity	+Up
Display Mode	Alt

b. Connect the test oscilloscope Ch 1 10X probe to TP546 on the Horizontal Deflection board, A11A1. Connect the Ch 2 10X probe to TP150 on A11A1. Note: These test points are accessible without extending A11.

c. Set the delayed sweep rate to 2 μs/div, and use the Delay Time Multiplier control to display the rising edge of both waveforms as shown in Fig. 6-14.

d. CHECK—that horizontal retrace blanking at TP150 begins 13 μs, ±400 ns, after the rising edge of the H-phased trigger at TP546. See Fig. 6-14. If readjustment is necessary, refer to step 6 in Section 7, Adjustment Procedure.

e. Disconnect the probes from the test points.

15. Check TV Pulse Response

a. Refer to Fig. 6-10 as a guide for equipment setup conditions except as follows: Apply a T pulse and bar signal to the decoder interface module Video Input A connector. If this signal is not available for the SECAM decoder module, use a convergence crosshatch signal from a SECAM test signal generator or use a PAL generator.

b. Set the decoder interface module push buttons to the Monochrome position for wideband response.

c. Set the 690SR POWER switch to OFF. Disconnect the crt socket from the base of the crt. Set the 690SR POWER switch to ON.

d. Connect the test oscilloscope Ch 1 10X probe to TP531 (red) on the Video Amplifier board, A13A1. Connect the Ch 2 10X probe to TP437 on the CRT Socket board, A12, and connect the probe ground lead to TP425 on A12.

NOTE

Use a short ground lead on the Ch 2 probe. The input capacitance of the probe must be 13 pF for a high-resolution crt, and *7.5 pF for a medium-resolution crt (Option 25).*

e. Set the test oscilloscope controls the same as Fig. 6-10 except as follows:

Ch 2 Input Coupling	AC
Ch 1 Deflection Factor	>50 mV/div
Ch 2 Deflection Factor	>5 V/div
Ch 2 Polarity	+Up
Display Mode	Alt
Sweep Rate	5 μs/div

f. Set the test oscilloscope Ch 1 and Ch 2 Variable Volts/Div controls so the amplitude of the T bar is exactly 6 major divisions for use as a reference.

g. Set the test oscilloscope Delay Time to 5 μs/div and the Delayed Sweep to 100 μs/div. Use the Delay Time Multiplier to position the T pulse into view as shown in Fig. 6-15.

h. CHECK—that the TP437 output pulse is the same amplitude as the TP531 input pulse within a tolerance of 5% or 1.5 minor divisions. Check that the aberrations of the output pulse are the same as the input pulse. See Fig. 6-15.

i. Move the Ch 1 probe to TP330 (green) on A13A1. Move the Ch 2 probe to TP419 on A12, and connect the probe ground lead to TP417 on A12. Set the test oscilloscope sweep rate to 5 μs/div.

j. CHECK—Using parts e through g of this step as a guide, check the green amplifier channel pulse response.

k. Move the Ch 1 probe to TP231 (blue) on A13A1. Move the Ch 2 probe to TP410 on A12, and connect the probe ground lead to TP405 on A12. Set the test oscilloscope sweep rate to 5 μs/div.

l. CHECK—Refer to parts e through g of this step as a guide. Check the blue amplifier channel pulse response.

m. Set the 690SR POWER switch to OFF. Reconnect the crt socket to the base of the crt. Disconnect the test oscilloscope 10X probes from the test points.

16. Check Field-Time Distortion

a. Use Fig. 6-10 as a guide for the equipment setup conditions and front-panel control settings except as follows:

Video Test Signal Generator: Set the controls to generate a field square-wave signal.

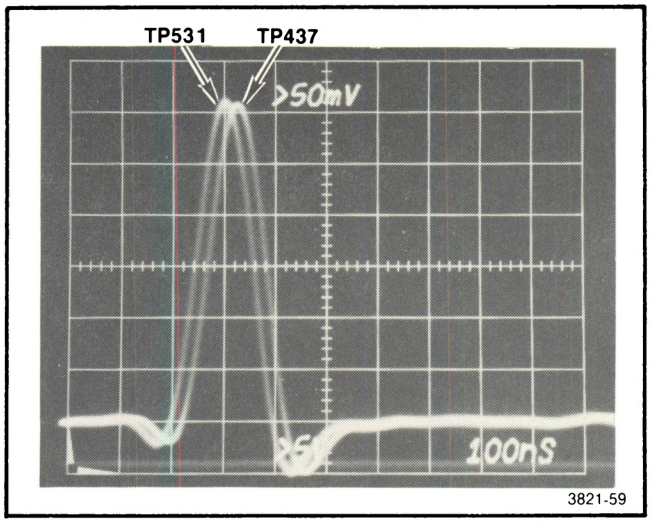

Fig. 6-15. Checking the video amplifier pulse response.

Decoder Interface Module: Set the Mode push buttons for Monochrome operation.

Test Oscilloscope:

Ch 1 & Ch 2 Input Coupling	AC
Ch 1 Deflection Factor	100 mV/div
Ch 2 Deflection Factor	2 V/div
Ch 2 Polarity	+Up
Display Mode	Alt
Triggering Level	Fully cw
Sweep Rate	2 ms/div

b. Connect the test oscilloscope Ch 1 10X probe to TP531 (red) on the Video Amplifier board, A13A1. Connect the Ch 2 10X probe to TP337 on the CRT Socket board, A12, and connect the probe ground lead to to TP425 on A12.

c. Set the test oscilloscope Ch 1 Variable Volts/Div control so that the field square wave is exactly 8 major divisions in amplitude.

d. Set the test oscilloscope Ch 2 Variable Volts/Div control so that the Ch 2 waveform matches the amplitude of the Ch 1 waveform.

e. Set the test oscilloscope Ch 2 Polarity switch to Invert and the Display Mode switch to Add. Use the Ch 2 Variable Volts/Div control to obtain a null at the black level as shown in Fig. 6-16A. Figure 6-16B shows an example of a waveform that is improperly nulled.

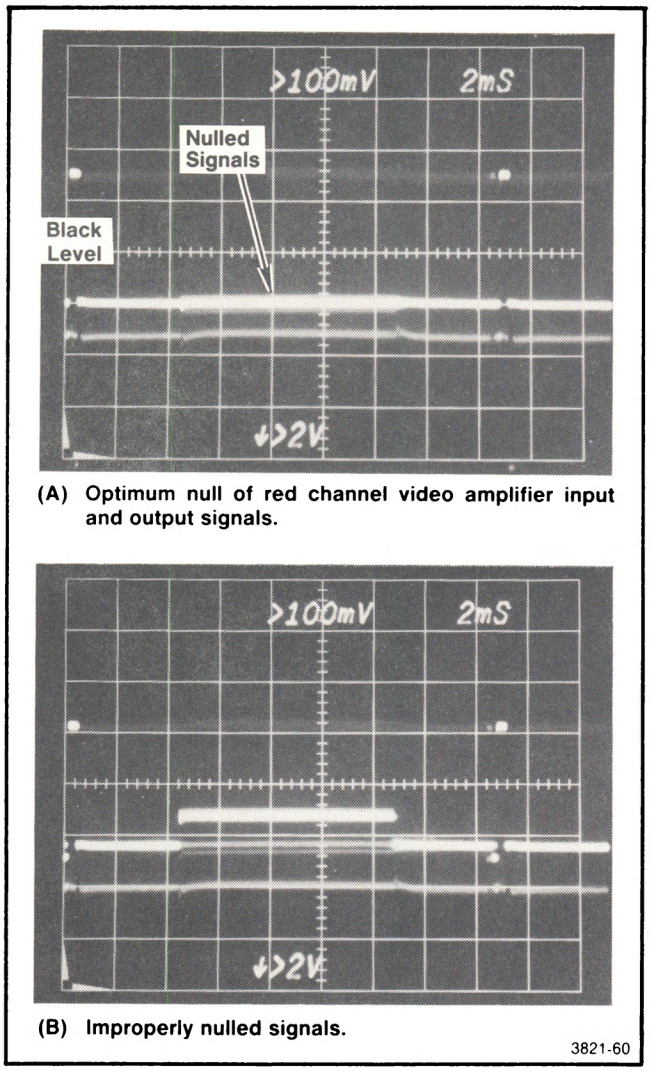

(A) Optimum null of red channel video amplifier input and output signals.

(B) Improperly nulled signals.

Fig. 6-16. Checking field-time distortion.

f. CHECK—that the field-time distortion of the output signal has less than ±2% tilt and ±2% aberrations with respect to the signal. Using Fig. 6-16A as an example, deviation from a straight-line trace must not exceed ±0.8 minor division (±2% of 40 minor divisions equals ±0.8 minor division).

g. Move the test oscilloscope Ch 1 10X probe to TP330 (green) on A13A1 and the Ch 2 10X probe to TP325 on A12. Move the Ch 2 probe ground lead to TP417 on A12. Set the Polarity switch to +Up and the Display Mode switch to Alt.

h. CHECK—Using the procedure described in parts c through f as a guide, deviation from a straight-line trace at the black level must not exceed ±0.8 minor division.

i. Move the test oscilloscope Ch 1 10X probe to TP231 (blue) on A13A1 and the Ch 2 10X probe to TP309 on A12. Move the Ch 2 probe ground lead to TP405 on A12. Set the Polarity switch to +Up and the Display Mode switch to Alt.

j. CHECK—Use the procedure described in parts c through f as a guide. Deviation from a straight-line trace at the black level must not exceed ±1.6 minor divisions.

k. Leave the probes connected to the test points.

17. Check Line-Time Distortion

a. Continuing from step 16, check that the test oscilloscope probes are connected to the test points described in part i of step 16.

b. Set the video test signal generator for a T bar output signal.

c. Set the test oscilloscope controls as follows:

Ch 1 Deflection Factor	>50 mV/div
Ch 2 Deflection Factor	>1 V/div
Ch 2 Polarity	+Up
Display Mode	Alt
Triggering Level	1/3 cw (to trigger at horizontal rate)
Sweep Rate	10 μs/div

d. Use parts c through e of step 16 as a guide for nulling the T bar input and output signals.

e. CHECK—that the line-time distortion of the output signal has less than ±2% tilt with respect to the input signal. That is, deviation from a straight-line trace at the black level must not exceed ±0.8 minor division excluding the transient spikes.

To check the ±3% aberration requirement, set the test oscilloscope Polarity switch to +Up and the Display Mode switch to Alt. Use a 100 ns/div or 200 ns/div delayed sweep rate when comparing the leading and trailing edges of the output signal to the input signal.

f. Move the test oscilloscope Ch 1 10X probe to TP330 (green) on A13A1 and the Ch 2 10X probe to TP325 on A12. Move the Ch 2 probe ground lead to TP417 on A12. Set the Polarity switch to +Up and the Display Mode switch to Alt.

g. CHECK—Repeat parts d and e of this step to check line-time distortion.

h. Move the test oscilloscope Ch 1 10X probe to TP531 (red) on A13A1 and the Ch 2 10X probe to TP337 on A12. Move the Ch 2 probe ground lead to TP425 on A12. Set the Polarity switch to +Up and the Display Mode switch to Alt.

i. CHECK— Repeat parts d and e of this step to check line-time distortion.

j. Leave the 10X probes connected to the test points.

18. Check Low-Frequency Non-Linear Distortion

Note

The technique for performing this step is similar to steps 16 and 17.

a. Use Fig. 6-10 as a guide for the equipment setup conditions and front-panel control settings. Check that the Mode push buttons are set for Monochrome operation.

Test Oscilloscope

Ch 1 & Ch 2 Input Coupling	AC
Ch 1 Deflection Factor	100 mV/div
Ch 2 Deflection Factor	5 V/div
Ch 2 Polarity	+Up
Display Mode	Alt

b. Check that the test oscilloscope sweep rate is 10 μs/div. Check that the Ch 1 10X probe is connected to TP531 (red) on A13A1 and the Ch 2 probe is connected to TP337 on A12.

c. Set the test oscilloscope Ch 1 and Ch 2 Variable Volts/Div control so the amplitude of the color bar monochrome signal is 8 major divisions in amplitude. Measure from black (setup) level to 100% white as shown on Fig. 6-17A.

d. Set the test oscilloscope Ch 2 Polarity switch to Invert and the Display Mode switch to Add. Use the Ch 2 Variable Volts/Div control to obtain optimum null at the black level as shown in Fig. 6-17B.

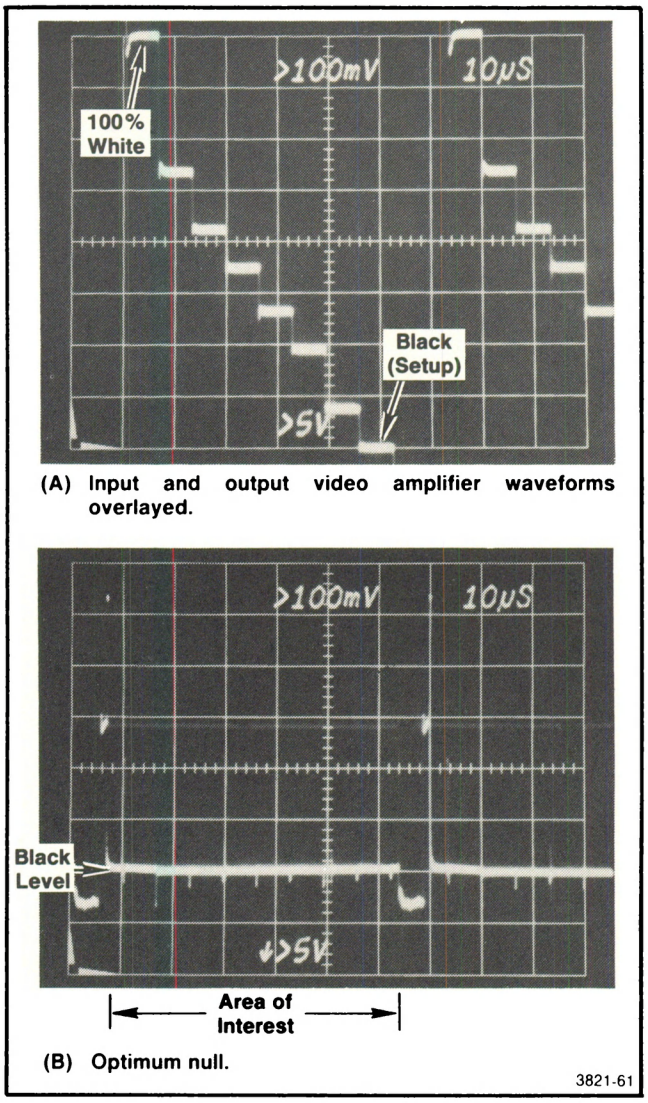

Fig. 6-17. Checking low-frequency non-linear distortion.

e. CHECK—that low-frequency non-linear distortion of the output signal is within ±2%. Using Fig. 6-17B as an example, deviation from a straight-line trace at the black level should be within ±0.8 minor division. Ignore the spikes in the area of interest shown in Fig. 6-17B.

f. Move the test oscilloscope Ch 1 10X probe to TP330 (green) on A13A1 and the Ch 2 10X probe to TP325 on A12. Move the Ch 2 probe ground lead to TP417. Set the Polarity switch to +Up and the Display Mode switch to Alt.

g. CHECK—Using the procedure described in parts c through e of this step, check that any deviation from a straight-line trace at the black level is within 0.8 minor division.

h. Move the test oscilloscope Ch 1 10X probe to TP231 (blue) on A13A1 and the Ch 2 10X probe to TP309 on A12. Move the Ch 2 probe ground lead to TP405. Set the Polarity switch to +Up and the Display Mode switch to Alt.

i. CHECK—Use the procedure described in parts c through e of this step to check that any deviation from a straight-line trace at the black level is within 0.8 minor division.

j. Disconnect the 10X probe from the test points.

19. Check Contrast and Black Level Tracking

a. Use Fig. 6-10 as a guide for equipment setup conditions and control settings except as follows: Three 10X probes are needed to monitor the output signals at the video amplifier R, G, and B channels.

Test Oscilloscope

Differential Amplifier	
+Input	AC
−Input	Gnd
Deflection Factor	10 V/div
Bandwidth	Full
Dual-Trace Amplifier	
Ch 1 & Ch 2 Input Coupling	AC
Ch 1 Deflection Factor	10 V/div
Ch 2 Deflection Factor	5 V/div
Display Mode	Alt
Mainframe	
Vertical Mode	Alt

b. Connect the test oscilloscope 10X probes to the following test points on the CRT Socket board, A12: Connect the differential amplifier 10X probe to TP337, and connect the ground lead to TP425; connect the dual-trace amplifier Ch 1 10X probe to TP325, and connect the ground lead to TP417; connect the dual-trace amplifier Ch 2 10X probe to TP309, and connect the ground lead to TP405.

c. Rotate the test oscilloscope dual-trace amplifier Ch 1 and Ch 2 Variable Volts/Div controls so the green and blue video waveforms at TP325 and TP309 are the same amplitude as the TP337 red waveform. Video amplitude is measured from the black level (setup) to 100% white. Figure 6-18 shows a typical display for use as a guide. Use the test oscilloscope (vertical) Position controls to overlay the waveforms.

d. Insert a 75 Ω feed-through termination in series between the decoder interface module Video Input A connector and the coaxial cable to double terminate the decoder interface module.

e. CHECK—contrast tracking by rotating the 690SR front-panel CONTRAST control within a range that causes the video component (black level to white) of the waveforms to go from 15 V peak to peak to 45 V peak to peak in amplitude. Check that there is less than 1% or 0.175 minor division difference in channel-to-channel amplitude at any point within the specified CONTRAST control range.

f. Remove the 75 Ω feed-through termination and reconnect the coaxial cable to the decoder interface module Video Input A connector.

g. Return the CONTRAST control to its PRESET position. Check that the BLACK LEVEL control is set to PRESET.

h. Set the test oscilloscope controls as follows:

Differential Amplifier	
+Input	DC
−Input	Vc
Comparison Voltage	−60 V
Deflection Factor	5 V/div
Dual-Trace Amplifier	
Ch 1 & Ch 2 Input Coupling	DC
Ch 1 Deflection Factor	5 V/div

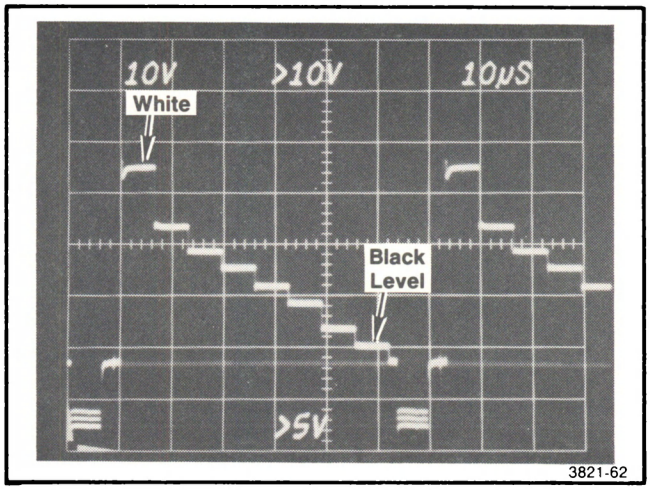

Fig. 6-18. Checking contrast tracking. Green and blue video waveforms are overlaying the red video waveform.

i. Set the test oscilloscope Variable Volts/Div controls for all three inputs so the waveforms are 4 major divisions in amplitude. Use the differential amplifier Comparison Voltage and dual-trace amplifier (vertical) Position controls to overlay the waveforms.

j. CHECK—black level tracking by rotating the 690SR front-panel BLACK LEVEL control throughout its range. Check that there is less than 2% or 0.4 minor division difference in black level when comparing channel to channel.

k. Disconnect all the 10× probes from the test points.

20. Check Signal-to-Noise Ratio

a. Use Fig. 6-19 as a guide for equipment setup conditions and control settings.

b. Disconnect the red, green, and blue signal coaxial cables from J631, J431, and J231 connectors, respectively, that are located inside the compartment for the decoder interface module. The three connectors are located on the Center Interconnect board, A1.

CAUTION

Insulate the cable connectors so that they do not short to the runs on the Center Interconnect board, A1.

c. Connect the test oscilloscope 7A13 +Input 10X probe to TP337 on the CRT Socket board, A12. Connect the probe ground lead to TP425 on A12. Use the Comparison Volts control to position the waveform into view.

d. Set the test oscilloscope delayed sweep knob to 20 μs/div so that the intensified area is displayed as shown in Fig. 6-20A.

e. CHECK—low and high frequency noise. Signal-to-noise ratio should be greater than 300:1; therefore, the

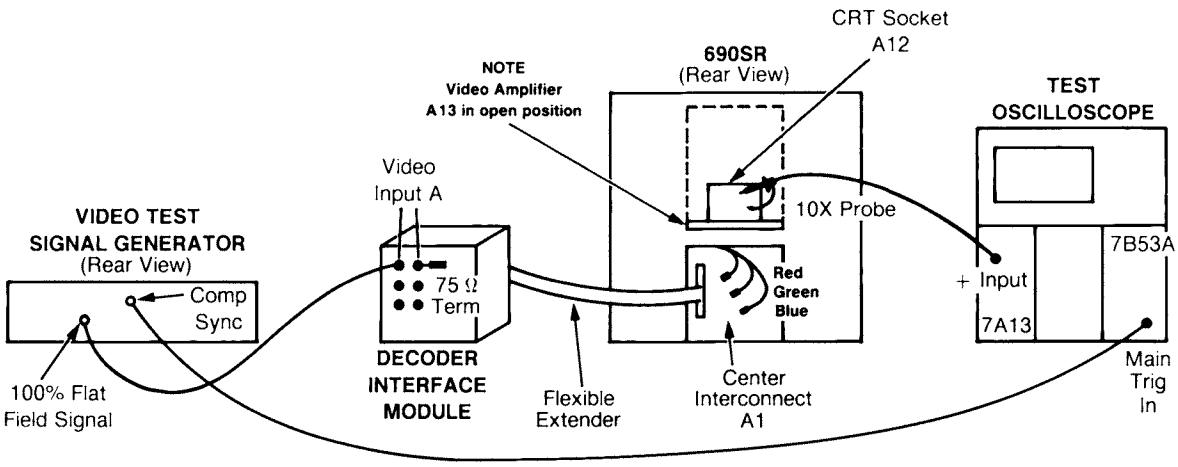

VIDEO TEST SIGNAL GENERATOR

Set controls to generate a 100% or 100 IRE flat field signal.

690SR

POWER	ON
BLACK LEVEL	PRESET
CONTRAST	PRESET

DECODER INTERFACE MODULE

All variable controls set to Preset. All pushbuttons set to the "out" position except Mode pushbuttons are set for Monochrome operation.

For NTSC decoder module (if used), Matrix switch is set to the "out" position.

TEST OSCILLOSCOPE

+Input	DC
−Input	Vc
Comparison Volts	−76.6 V
Deflection Factor	50 mV/div
Bandwidth	Full
Triggering Level*	Fully cw
Triggering switches	−Ext, Auto, AC LF Rej
Magnifier	X1
Sweep Rate	2 ms/div

*Set to trigger on vertical rate signal.

3821-63 A

Fig. 6-19. Equipment setup conditions for checking signal-to-noise ratio.

video amplifier noise measured at TP337 on A12 should be less than 117 mV in amplitude. (For example, red = 35 V/300 = 117 mV.) See Figs. 6-20B and 6-20C.

f. Move the test oscilloscope 7A13 +Input 10X probe to TP325 on A12. Connect the probe ground lead to TP417 on A12. Use the Comparison Volts control to position the waveform into view.

g. CHECK—Repeat part e of this step, except the green video amplifier noise at TP325 on A12 should be less than 100 mV in amplitude. (For example, green = 30 V/300 = 100 mV.)

h. Move the test oscilloscope 7A13 +Input 10X probe to TP309 on A12. Connect the probe ground lead to TP405 on A12. Use the Comparison Volts control to position the waveform into view.

i. CHECK—Repeat part e of this step, except the blue video amplifier noise at TP309 on A12 should be less than 83 mV in amplitude. (For example, blue = 25 V/300 = 83 mV.)

j. Disconnect the 10× probe from the test point.

21. Check Channel-to-Channel Isolation

a. Continuing from the previous step, check that the equipment setup conditions and control settings are the same as shown in Fig. 6-19, except as follows:

Set the video test signal generator controls to obtain a high-frequency range (20 MHz) composite sweep signal without markers.

If a SECAM decoder interface module is used with the 690SR and the composite sweep signal is not available, use a SECAM color bar test signal with chrominance turned on.

b. Connect the green signal coaxial cable to J431 on the Center Interconnect board, A1. Check that the red and blue signal coaxial cables are disconnected and insulated to prevent accidental shorts.

c. Connect the test oscilloscope 7A13 +Input 10X probe to TP325 on the CRT Socket board, A12. Connect the probe ground lead to TP417.

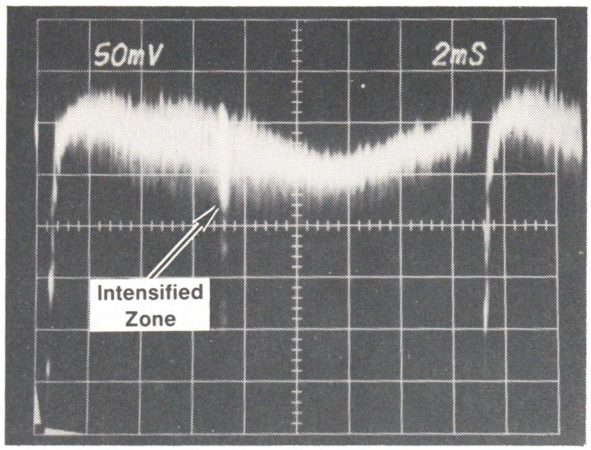

(A) Single-sweep photograph of waveform to show intensified zone.

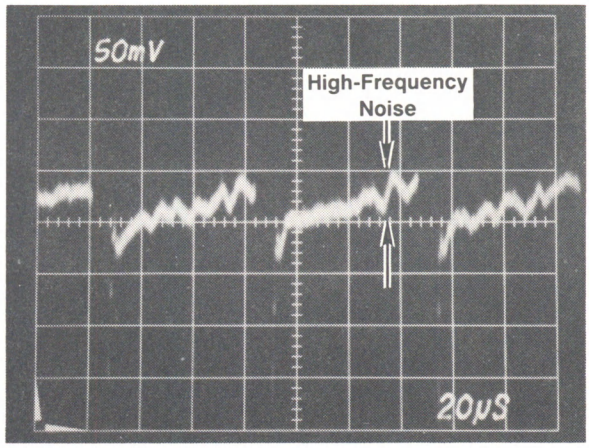

(B) Single-sweep photograph of waveform to show peak-to-peak high-frequency noise.

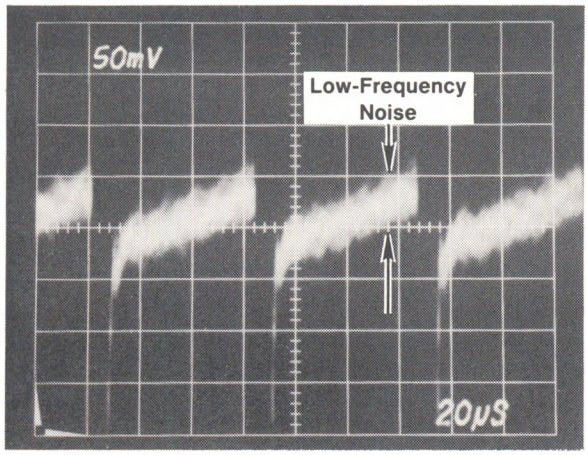

(C) One second timed exposure photograph to show low-frequency noise amplitude.

3821-64

Fig. 6-20. Measuring low and high frequency noise amplitude at TP337 on A12.

d. Set the test oscilloscope controls to the same settings as given in Fig. 6-19 except as follows:

Comparison Volts	−66 V
Deflection Factor	10 V/div
Triggering Level (Set to trigger at horizontal rate)	1/3 cw
Sweep Rate	10 μs/div

e. Use the 7A13 Comparison Volts control to position the waveform into view. Note the peak-to-peak amplitude of the video signal as shown in Fig. 6-21A.

f. Move the 10X probe to the adjacent channel; that is, to TP337 with probe ground lead connected to TP425, or to TP309 with probe ground lead to TP405.

g. Set the test oscilloscope controls as follows:

Comparison Volts	−63 V
Deflection Factor	500 mV/div

h. Use the Comparison Volts control to position the video portion of the crosstalk signal into view as shown in Fig. 6-21B.

i. CHECK—that channel-to-channel isolation is 20 dB down (20 dB is a ratio of 10:1). The signal at the adjacent channel (TP337 or TP309 on A12) must be at least 10X smaller than the signal at TP325. For example, since Fig. 6-21A waveform is 50 V peak to peak in amplitude, Fig. 6-21B waveform must be less than 5 V in amplitude to meet the 20 dB requirement. (Figure 6-21B, as shown, is only 1.9 V in amplitude.)

All other combinations, if checked, will be similar to the amplitude shown in Fig. 6-21. These combinations can be checked, if desired, as follows:

1. With the red signal coaxial cable connected to J631 and the green and blue coaxial cables disconnected, check that the crosstalk video signal at TP325 is 10X smaller than the video signal at TP337.

2. With the blue signal coaxial cable connected to J231 and the red and green coaxial cables disconnected, check that the crosstalk video signal at TP325 is 10X smaller than the video signal at TP309.

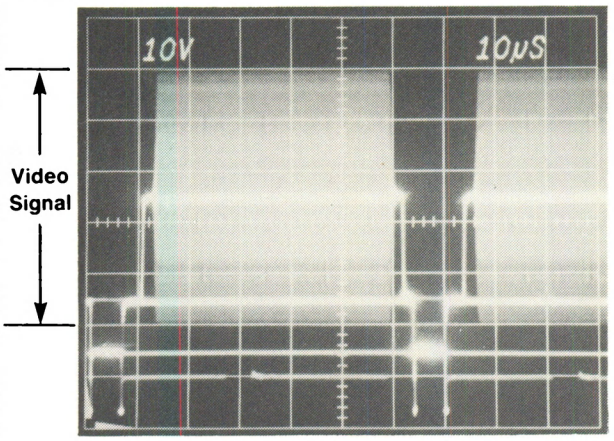

(A) Peak-to-peak video signal amplitude at TP325.

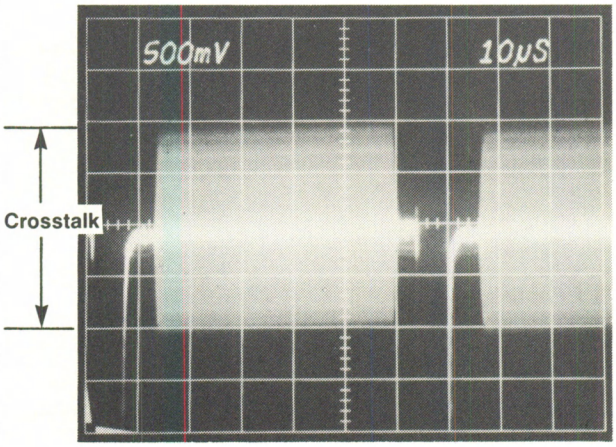

(B) Peak-to-peak crosstalk video signal amplitude at TP337.

3821-65

Fig. 6-21. Checking channel-to-channel isolation.

j. Disconnect the 10X probe from the test point.

k. Reconnect the red, green, and blue signal coaxial cables to J631, J431, and J231 connectors, respectively.

l. Set 690SR POWER switch to OFF. Remove the flexible extender and reinstall the decoder interface module in the 690SR mainframe. Set the 690SR POWER switch to ON.

22. Check Differential Gain

a. Use the same equipment set-up conditions and control settings as shown in Fig. 6-22. Connect the test oscilloscope 10X probe to TP337 on the CRT Socket board, A12. Connect the probe ground lead to TP425 on A12. Use a probe with a short ground lead.

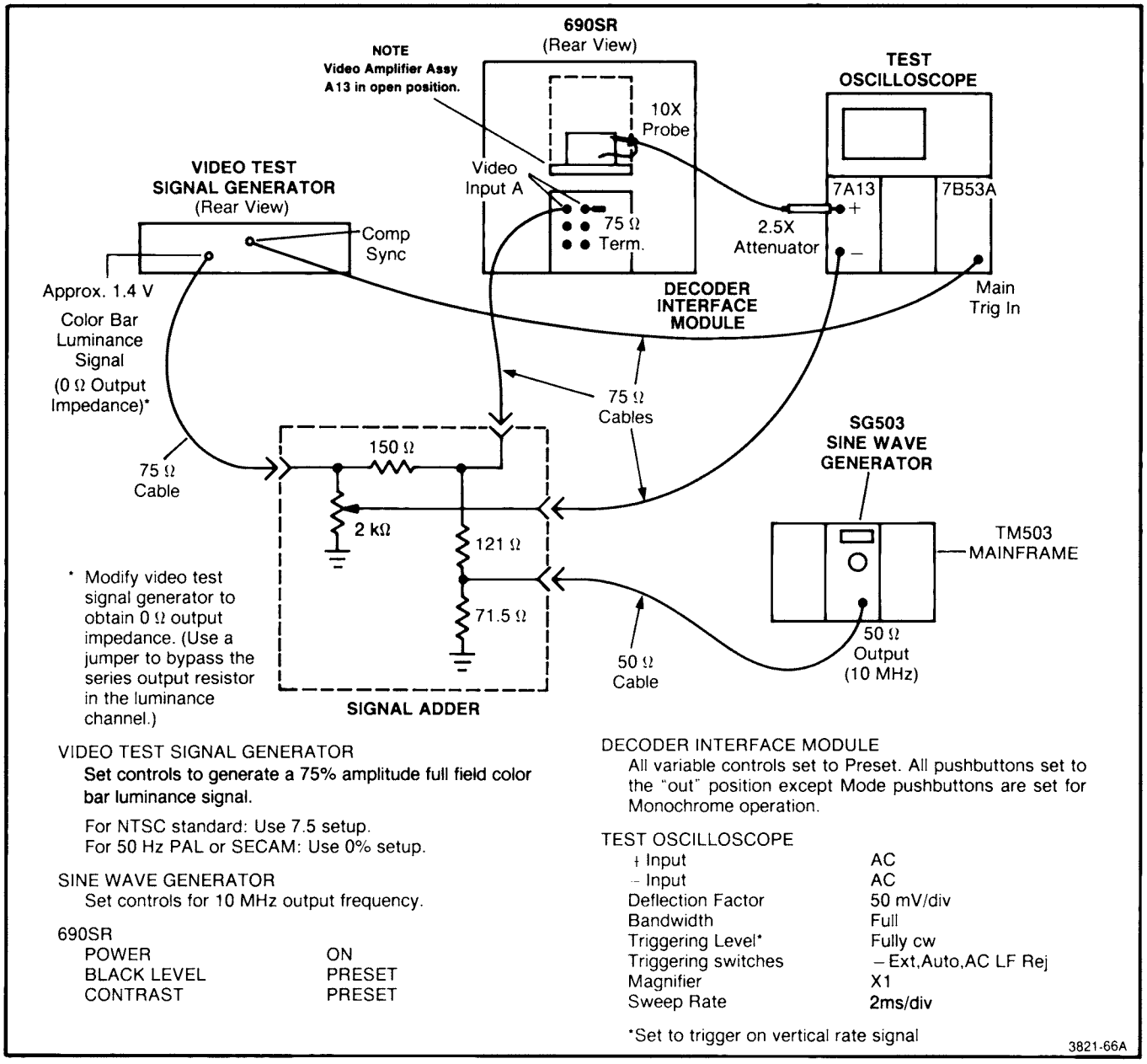

Fig. 6-22. Equipment setup conditions for checking differential gain.

b. Rotate the signal adder Gain control to obtain a null. Use Fig. 6-23A as a guide. Set the sine-wave generator so the test oscilloscope display amplitude is approximately 5 major divisions in amplitude as shown in Fig. 6-23A.

c. Set the test oscilloscope time base controls to intensify the area shown in Fig. 6-23A. Use a delayed sweep rate of 10 μs/div to display a horizontal line of the video signal as shown in Fig. 6-23B.

d. Set the sine-wave generator Ouput Amplitude control so the black bar is exactly five major divisions in amplitude.

e. CHECK—differential gain by comparing the black bar amplitude to each of the other bars; particularly the white bar. The amplitude of the other bars should be within 5% or 1.25 minor divisions of the black bar amplitude at a frequency of 10 MHz.

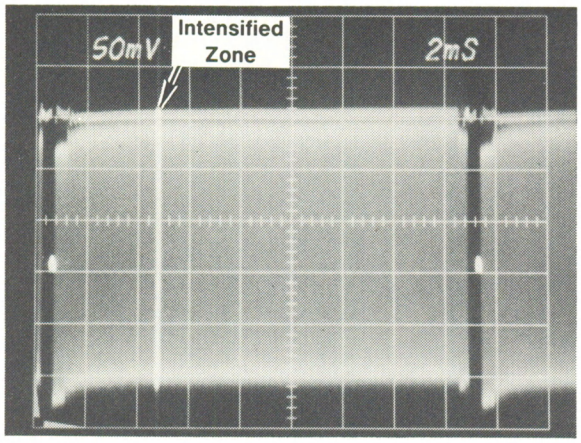

(A) Vertical rate display at TP337 showing intensified zone.

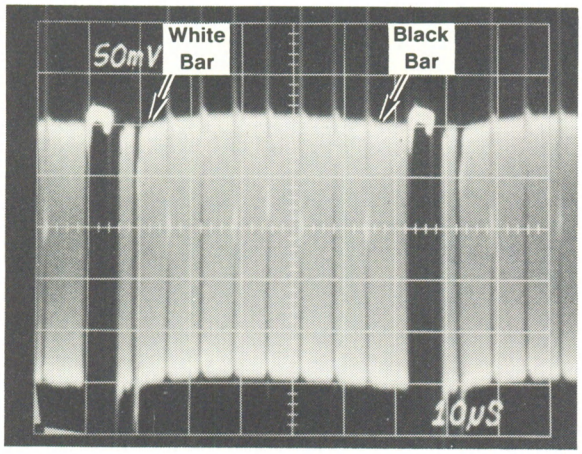

(B) Differential gain at output of video amplifier. Delayed sweep is used to view the horizontal rate waveform at TP337 on A12.

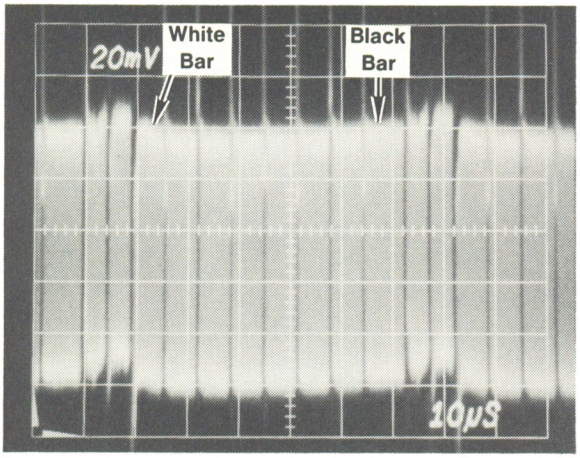

(C) Differential gain at output of decoder interface module. 2.5X attenuator is removed and delayed sweep is used to view the horizontal rate waveform at TP531 on A13A1.

3821-67

Fig. 6-23. Checking differential gain of the video amplifier red channel.

NOTE

If differential gain is excessive, the cause may be the decoder interface module. To check differential gain of the decoder interface module, move the test oscilloscope 10X probe to TP531 on the Video Amplifier board, A13A1. Remove the 2.5X attenuator, adjust the signal adder Gain control to obtain a null, and adjust the sine-wave generator Output Amplitude control so the test oscilloscope waveform display is 5 major divisions in amplitude. Figure 6-23C shows a proper display for use as a guide. Disconnect the 10X probe from TP531 and reinstall the 2.5X attenuator. Actual differential gain of the 690SR mainframe can be determined by comparing the differential gain of TP337 waveform to the differential gain of TP531 waveform.

f. Move the test oscilloscope 10X probe to TP325 on A12. Connect the probe ground lead to TP417.

g. CHECK—Repeat parts d and e of this step. NOTE: To check decoder interface module differential gain, move the 10X probe to TP330 on A13A1.

h. Move the test oscilloscope 10X probe to TP309 on A12. Connect the probe ground lead to TP405.

i. CHECK—Repeat parts d and e of this step. NOTE: To check decoder interface module differential gain, move the 10X probe to TP231 on A13A1.

f. Disconnect the probe from the test point. Disconnect all the equipment from the 690SR/decoder interface module combination.

23. Check 690SR Input Voltage Range

a. Use Fig. 6-24 as a guide for the equipment setup conditions and control settings.

b. When performing part d of this step, use an accurate multimeter to monitor and measure the supply voltages listed in Table 6-3. Use the test oscilloscope with a 10X probe to measure the ripple. The test points are located at the Minimum Load Connector J402 on the LV Power Supply board, A7A1A3.

c. Use the autotransformer to set the mains voltage to low line (103 V) and high line (127 V) when performing part d of this step.

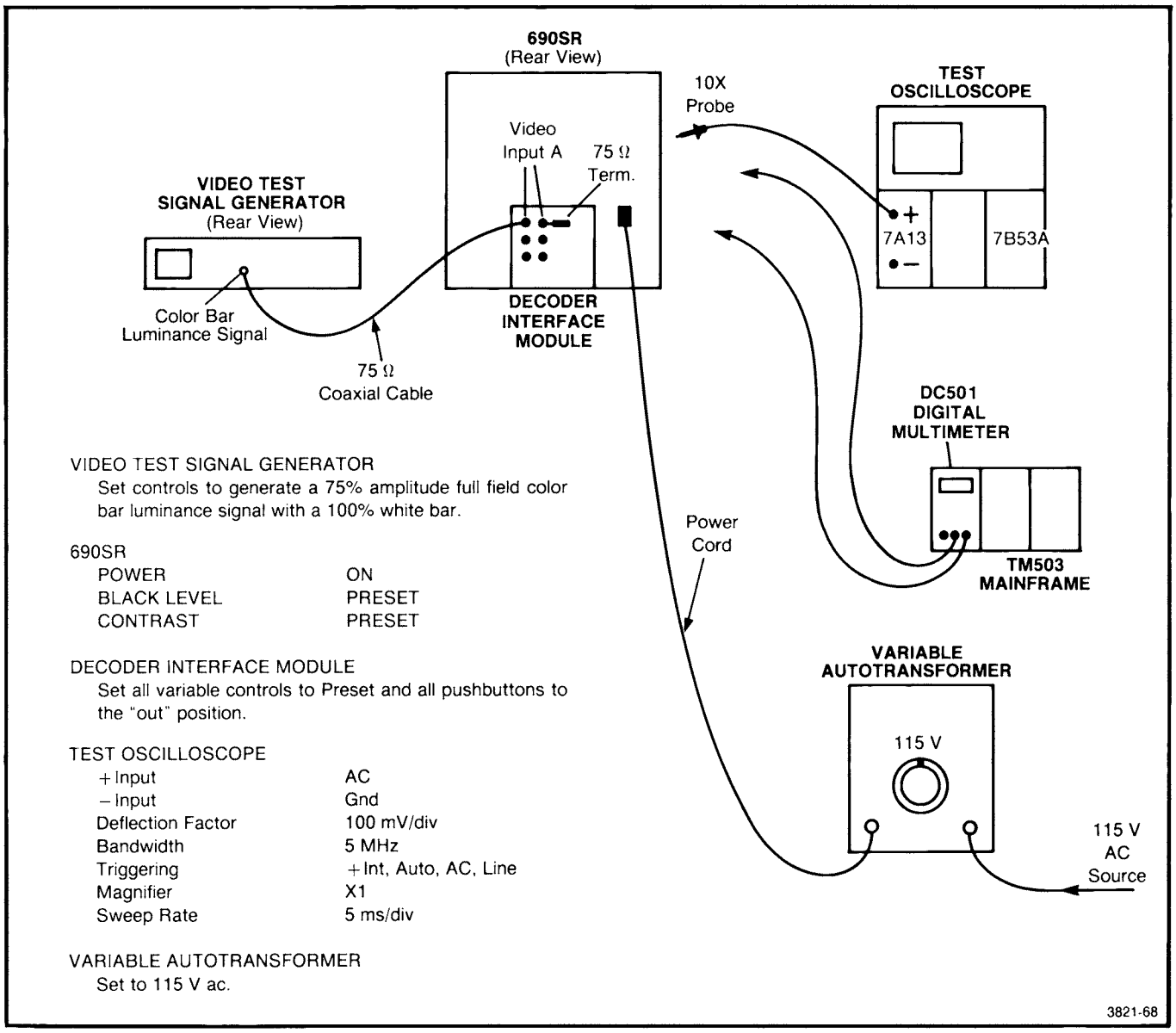

Fig. 6-24. Equipment setup conditions for checking 690SR input voltage range.

d. CHECK—regulation and ripple using Table 6-3. Use pin 2 of J402 for the ground connection.

Table 6-3
LV POWER SUPPLY

J402 Test Points on A7A1A3	Power Supply	Tolerance	Mains Frequency Ripple
Pin 1	−15.3 V	±0.3 V	420 mV
Pin 3	+8 V	±0.6 V	140 mV
Pin 4	+15.3 V	±50 mV	420 mV
Pin 6	+200 V	±5 V	1.8 V

e. Disconnect the digital multimeter and test oscilloscope 10X probe from the test points.

f. Set the variable autotransformer voltage control to 115 V.

24. Check Maximum Operating Range

a. Use Fig. 6-24 as a guide for the equipment setup conditions and control settings.

NOTE

The digital multimeter is not used in this step.

b. Connect the test oscilloscope differential amplifier +Input 10× probe to the *hot* side of the line cord at the variable autotransformer output connector. Connect a 10× probe from the −Input of the differential amplifier to the *low* side (not ground) of the two-pole line.

c. Set the test oscilloscope controls as follows:

+Input	DC
−Input	DC
Deflection Factor	50 V/div

d. Set the variable autotransformer voltage control so the test oscilloscope waveform display is 269 V peak to peak in amplitude.

e. CHECK—that a stable color bar luminance signal is displayed on the 690SR crt.

f. Set the 690SR POWER switch to OFF and remove the power cord from the instrument.

g. Remove the power supply assembly, A7, from the 690SR mainframe. Refer to Troubleshooting Low Volts Power Supply in Section 9 of this manual for removal instructions, or refer to steps 1 through 7 of the Changing Mains Voltage & Fuse procedure in Section 4.

h. Connect the Minimum Load Unit (Tektronix Part No. 067-0998-00) to the Minimum Load Connector J402 on the Power Supply Output board, A7A1A3.

i. Connect the power cord to the power supply assembly, A7, and set the POWER switch on the assembly to ON.

j. Set the variable autotransformer voltage control so the test oscilloscope waveform display is 358 V peak to peak in amplitude.

k. CHECK—that the power indicator light on the Minimum Load Unit glows steadily.

l. Set the variable autotransformer voltage control so the output voltage is 115 V.

m. Disconnect the test oscilloscope 10X probes from the power connector.

25. Check CRT Heater Supply

a. Continuing from step 24, check that the power assembly, A7, is removed from the 690SR mainframe. Check that the Minimum Load Unit is connected to the Minimum Load Connector, J402, on A7A1A3 and the power cord is connected to the 115 V ac power source.

b. Place the power supply assembly, A7, close to the 690SR mainframe so that the crt heater connector P330 can be connected to J330 on the Power Supply Output board, A7A1A3. After P330 is connected to J330, position the power supply assembly, A7, to obtain access to J330 connections on A7A1A3.

c. Touch the digital multimeter test prods to J330 solder connections on A7A1A3.

d. CHECK—for 5.9 V to 6.3 V dc readout on the digital multimeter.

e. Disconnect the digital multimeter test prods from J330.

f. Set the POWER switch to OFF and disconnect the power cord from A7.

g. Disconnect the Minimum Load Unit from J330 on A7A1A3.

h. Reinstall the power supply assembly, A7, in the 690SR mainframe. Check that all the remaining cable connectors are connected to A7. Reconnect the power cord to the 690SR mainframe.

i. Disconnect the variable autotransformer and connect the 690SR power cord directly to the mains power source. Set the POWER switch to ON.

26. Check Anode Supply Voltage

a. Use Fig. 6-25 as a guide for connecting the equipment and setting the front-panel controls.

b. Check that the digital multimeter is connected to J450, pins 1 and 2 (lower two pins), on the High Voltage Regulator board, A7A2A1, as indicated in Fig. 6-25. Be sure that the input impedance of the multimeter is 10 MΩ or higher. Note: J450 is labeled J209 on the cover of some instruments.

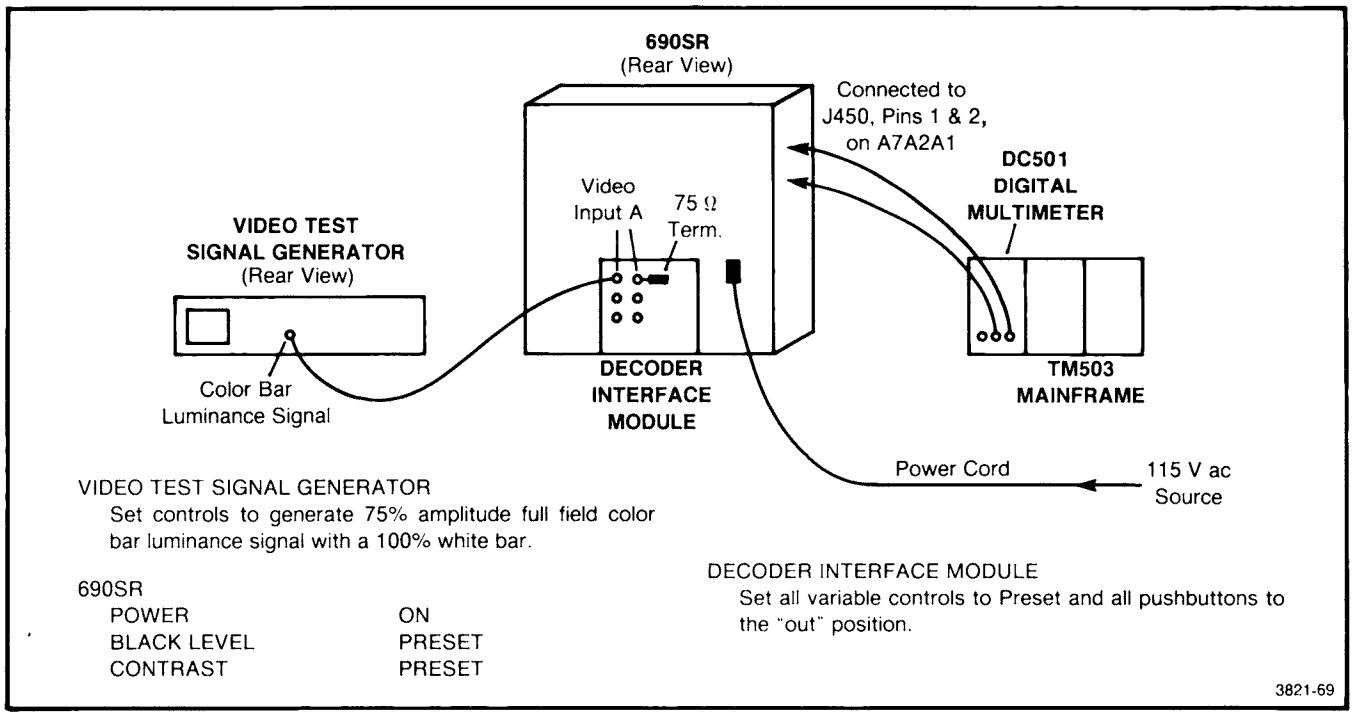

Fig. 6-25. Equipment setup conditions for checking the anode supply voltage.

CAUTION

Avoid using a low multimeter range setting to prevent shutting down the high voltage supply.

c. CHECK—for a 7.8 V, ±2%, reading between pins 1 and 2 of J450. This voltage drop causes the anode voltage to be 25 kV within a tolerance of ±1 kV. If readjustment is necessary, refer to step 4 in Section 7 Adjustment Procedure.

d. Disconnect the digital multimeter.

This completes the Performance Check Procedure.

ADJUSTMENT PROCEDURE

This section of the manual contains logically-sequenced procedures for checking and adjusting the 690SR Color Monitor mainframe.

NOTE

Limits, tolerances, and waveforms appearing in this section are not instrument specifications except when they agree with those listed in Section 3, Specification.

The 690SR front-panel names used in the procedures are capitalized; e.g., CONTRAST. Internal adjustments and switches for the 690SR have only the first letter capitalized; e.g., Black Level Preset. Controls, switches, and connectors for the decoder interface module and test equipment also have only their first letter capitalized.

Recommended Test Equipment

Table 7-1 lists the test equipment needed to check and calibrate the 690SR. Capabilities of the test equipment are the minimum required to perform the test. If alternative equipment is used, it must meet or exceed the specification.

Table 7-1
RECOMMENDED TEST EQUIPMENT
(Includes Terminations, Coaxial Cables, and Adapters)

Description of Equipment	Equipment Minimum Specification	Examples
Television Video Test Signal Generator	Generates full field color bar luminance signal, convergence crosshatch pattern, and flat field signal. See topic Video Test Signal Generator, for more details.	TEKTRONIX 1410/SPG2/ TSG1/TSP1/TSG3 NTCS Generator
Television Decoder Interface Module	Process the composite video signal. See topic, Television Decoder Interface Module, for more details.	TEKTRONIX 69M00 NTSC Decoder
Linearity Graticule	Full screen film positive.	See topic, Linearity Graticule.
Variable Autotransformer	Capable of 10 A at 103 Vac to 127 VAC	Superior Electric Powerstat Type VS116B
Digital Voltmeter	For measuring +15.3 V, 7.86 V and obtaining a null. Optional measurements: −15.3 V, +8 V, +200 V; 4-1/4 digit LED display. Accuracy 0.1% of reading ±2 counts. Input R: 10 MΩ.	TEKTRONIX TM 503 Power Mainframe and TEKTRONIX DM 501 Multimeter
Test Oscilloscope		
Mainframe	At least 50 MHz bandwidth with plug in.	TEKTRONIX 7603
Differential Comparator Plug-in	Minimum deflection factor: 10 mV/div with 10X probe.	TEKTRONIX 7A13
Dual-Trace Amplifier Plug-in	At least 50 MHz bandwidth with test oscilloscope. Minimum deflection factor: 50 mV/div with 10X probe.	TEKTRONIX 7A18
Dual Time Base Plug-in	Sweep rate: 2 ms/div to 200 ns/div.	TEKTRONIX 7B53A
10X Probe (2 needed)	Matches input capacitance of test oscilloscope. Useful bandwidth at least 50 MHz.	TEKTRONIX P6105

Table 7-1 (cont)

Description of Equipment	Equipment Minimum Specification	Examples
High Intensity Light Source	Light source is positioned 30 inches from the front of the linearity graticule to project a shadow from the graticule onto the screen phosphor.	Tensor-type reading lamp.
Photometer	For measuring luminance in foot lamberts and irradiance in $\mu W/cm^2$.	TEKTRONIX J16 Digital Photometer with a J6503 Luminance Probe, J6502 Irradiance Probe, and a 016-0305-00 Light Occluder.
Reference Light Source Optical Comparator	For use as a "primary" standard when adjusting high-light color temperature to 6500 K.	Grafikon, Hellige IRT, or Macbeth
Rigid Module Extender Card	For extending module assemblies so adjustments and test points can be reached.	Tektronix Part No. 067-0999-00
Coaxial Cable (Qty. 3)	Impedance, 75 Ω; length, 42 inches equipped with bnc connectors.	Tektronix Part No. 012-0074-00
End-line Termination	Impedance, 75 Ω.	Tektronix Part No. 011-0102-00
Color Television Degaussing Coil	Capable of demagnetizing the crt, chassis, and surrounding area.	

Television Video Test Signal Generator

Use a video test signal generator that will drive the television decoder interface module used with the 690SR mainframe. The generator should provide the following signals:

1. Color Bars. A 75% amplitude color bar luminance (Y only) with 100% white bar. If NTSC standard is used, use 7.5% setup for the black level. If 50 Hz PAL or SECAM standard is used, use 0% setup for the black level.

NOTE

The subcarrier frequency for 50 Hz PAL television standard must be 4.43361875 MHz.

2. Convergence Crosshatch Pattern. For more information, refer to the topic Linearity Graticule.

3. Flat Field. For 10% flat field adjustments, a 10% or 10 IRE flat field signal is needed. For 100% flat field adjustments, use a 100% or 100 IRE flat field signal.

Examples of television video test signal generators are as follows:

Television Standard	Equipment Examples
NTSC	TEKTRONIX 1410 NTSC Generator with SPG2 Sync Generator, TSG1 Color Bar Generator, TSP1 Switcher with Convergence Generator, and TSG3 Linearity Generator modules.
50 Hz PAL (4.43361875 MHz Subcarrier)	TEKTRONIX 1411 PAL Generator with SPG12 Sync Generator, TSG11 Color Bar Generator, TSP11 Switcher with Convergence Generator, and TSG13 Linearity Generator modules.
SECAM	TEKTRONIX 143 SECAM Test Signal Generator. Read the NOTE that follows.

NOTE

If the TEKTRONIX 143 SECAM Test Signal Generator is used, a 10% flat field signal is obtained by inserting a 75 Ω 10X attenuator between the SECAM decoder interface module Video Input connector and the coaxial cable from the generator. The Tektronix part number for the 10X attenuator is 011-0061-00. To ensure a stable display, apply composite sync from the generator to the SECAM decoder interface module Ext Sync connector and set the decoder Int-Ext switch to the Ext position.

Television Decoder Interface Module

The television decoder interface module must be properly calibrated for driving the 690SR mainframe. (A television RGB interface module can be used if RGB test signals are available.) Calibration of the interface module can be quickly checked by using a test oscilloscope and a 10X probe. Check setup level and video amplitudes at these 690SR input test points on the Video Amplifier board, A13A1: TP531 (Red), TP330 (Green), and TP231 (Blue). Table 7-2 lists the setup level and video amplitudes for each standard.

Table 7-2
690SR VIDEO INPUT SIGNAL LEVELS

Television Standard	Signal Applied to Decoder Interface Module	690SR Video Input Signal Levels[a]
NTSC	7.5% setup (black)	0 V
	10% or 10 IRE flat field	19 mV
	100% or 100 IRE flat field (white)	700 mV
PAL or SECAM	0% setup (black)	0 V
	10% flat field	70 mV
	100% flat field (white)	700 mV

[a]**Measured at TP531 (Red), TP330 (Green), and TP231 (Blue) on the 690SR Video Amplifier board, A13A1.**

Linearity Graticule

Use a linearity graticule that will match the television test signal generator crosshatch pattern. Select a linearity graticule from the following information:

Tektronix 14 × 17 Line Linearity Graticule, Tektronix Part No. 067-1054-00. For use with the TEKTRONIX 1410/SPG2/TSP1 NTSC Generator. This graticule can also be used with a TEKTRONIX 1410/SPG2/TSG2 NTSC Generator, 1411/SPG12/unmodified-TSG12 PAL Generator, or a TEKTRONIX 143 SECAM Test Signal Generator.

Tektronix 15 × 20 Line Linearity Graticule Tektronix Part No. 067-1055-00. For use with the TEKTRONIX 1411/SPG12/TSP11 PAL Generator. This graticule can also be used with a TEKTRONIX 1411/SPG12/TSG12 PAL Generator. Use a modified TSP11 or TSG12 module that generates a 15 × 20 line crosshatch pattern. Check with the Tektronix Service Center for information concerning this proposed modification.

SHORT-FORM ADJUSTMENT PROCEDURE

LOW VOLTAGE POWER SUPPLY A7A1

1. Adjust Low Voltage Cal (R462)

Adjust R462 on A7A1A2 for +15.3 V between pins 2 and 4 of J402 on A7A1A3.

2. Adjust Volts Null Cal (R463)

0 V at TP460 on A7A1A2.

3. (Optional) Check LV Power Supply Regulation and Ripple.

See long-form procedure.

HIGH VOLTAGE REGULATOR A7A2A1

4. Adjust High Voltage Cal (R452)

7.8 V between pins 1 and 2 (lower two pins) of J450 on A7A2A1.

5. Adjust Overload Threshold (R433)

Rotate BLACK LEVEL and CONTRAST controls to obtain a J16 Photometer reading of 62 foot lamberts. Adjust R433 on A7A2A1 so DS251 just starts to flash.

HORIZONTAL DELAY STABILIZER A11A2

6. Adjust Horizontal Retrace Delay (R436)

Rising edge of waveform at TP120 on A11A2 is delayed 13 μs from falling edge of waveform at TP228.

VERTICAL DEFLECTION A10A1

7. Adjust T & B Pin Crossover Distortion (R640)

Check that pins 2 and 3 of J542 on A10A1 are jumpered. Adjust R640 for no crossover distortion at TP728 and TP748 on A10A1.

CONVERGENCE OUTPUT A14A1

8. Adjust Blue, Green, Red, and Blue Lateral Crossover Distortion (R648, R542, R342, R141)

CAUTION

Avoid rotating the Crossover Distortion adjustments too far clockwise. Overadjustment may cause damage to the amplifier.

Check that pins 2 and 3 of J853 on A14A1 are jumpered. Adjust for minimum crossover distortion and standing current using the following adjustments and test points on A14A1:

Adjustment	Test Points
R648 (Blue)	TP717, TP747
R542 (Green)	TP517, TP547
R342 (Red)	TP317, TP348
R141 (Blue Lateral)	TP211, TP242

RASTER CONTROL A9A1
CONVERGENCE CONTROL A8A1

9. Adjust Slope (R240), Horiz Ramp Cal (R928), and DC Level (R145)

ADJUSTMENT SEQUENCE

Adjustment	Location	Adjustment Setting
R240	A9A1	Match waveform slope at TP230 to slope at TP251 on A9A1. Use A-B mode to obtain a null.
R925 (H Size)	A8A1	Fully clockwise.
R928	A8A1	8 V active-time ramp at TP474 on A8A1.
R145	A9A1	0 V at center of active-time ramp at TP474 on A8A1.

10. Adjust Vert Ramp Cal (R827) and Vertical Position (R820)

Rotate Vert Size control (R825) on A8A1 fully clockwise.

Adjust R827 on A8A1 to obtain a 7.6 V linear ramp at TP675 on A8A1.

Set Vertical Position (R820) on A8A1 so center of linear ramp is at 0 V.

HIGH VOLTAGE FOCUS A7A2A2

11. Adjust Static Focus (R260)

Optimum focused crosshatch lines.

CONVERGENCE CONTROL A8A1
VERTICAL DEFLECTION A10A1
HORIZONTAL DEFLECTION A11A1

12. Adjust Purity, Primary and Static Convergence, Vert Raster Centering (R551), and Horizontal Raster Centering (R149)

Set Secondary Convergence switch S626 on A8A1 to Off for steps 12 to 25. Check that pins 1 and 2 of J720 on A11A1 are jumpered. See long form for adjustment sequence.

CONVERGENCE CONTROL A8A1
CONVERGENCE GENERATOR A8A2
RASTER CONTROL A9A1

13. Adjust DC Offset (R500), X/Y Offset (R403), and DC Level (R805)

Install a jumper on pins 3 and 4 of J600 on A8A2. Leave this jumper installed through step 19.

ADJUSTMENT SEQUENCE

Adjustment	Location	Adjustment Setting
R925 (H Size)	A8A1	7 V active-time ramp at TP500 on A8A2.
R145 (DC Level)	A9A1	0 V at center of active-time ramp.
R500	A8A2	0 V active time at TP420 on A8A2 when J412 is jumpered.
R805	A8A2	Horizontal parabola just reaches 0 V at start and end of active time at TP523 on A8A2.
R403	A8A2	Horizontal parabola at TP523 is symmetrical.

14. Adjust Y Offset (R624), X Offset (R625), and DC Offset (R723)

ADJUSTMENT SEQUENCE

Adjustment	Location	Adjustment Setting
R624	A8A2	Minimum active-time signal amplitude at TP635 when J735 is jumpered.
R723	A8A2	0 V active time at TP635 when J634 and J735 are jumpered.
R625	A8A2	Minimum active-time signal amplitude at TP635 when J634 is jumpered.
R624, R625	A8A2	Optimum horizontal 'S' waveform at TP635 when J634 and J735 are not jumpered.

15. Adjust Y Offset (R521), DC Offset (R524), and X Offset (R425)

ADJUSTMENT SEQUENCE

Adjustment	Location	Adjustment Setting
R521	A8A2	Minimum active-time signal amplitude at TP434 when J635 is jumpered.
R524	A8A2	0 V active time at TP434 when J635 and J425 are jumpered.
R425	A8A2	Minimum active-time signal amplitude at TP434 when J425 is jumpered.
R521, R425	A8A2	Optimum horizontal 'B' waveshape at TP434 when J425 is not jumpered.

16. Adjust DC Offset (R302), X/Y Offset (R300), and DC Level (R220)

ADJUSTMENT SEQUENCE

Adjustment	Location	Adjustment Setting
R825 (Vert Size)	A8A1	7 V linear portion of vertical ramp at TP101 on A8A2.
R820 (Vert Position)	A8A1	0 V at center of linear portion of ramp at TP101 on A8A2.
R302	A8A2	0 V trace dc level at TP320 on A8A2 when J320 is jumpered.
R220	A8A2	Right corner of inverted parabola waveform at TP229 just reaches 0 V.

17. Adjust Y Offset (R324), DC Offset (R322), and X Offset (R328)

ADJUSTMENT SEQUENCE

Adjustment	Location	Adjustment Setting
R324	A8A2	Minimum signal amplitude at TP235 when J335 are jumpered.
R322	A8A2	0 V trace dc level at TP235 when J335 and J235 are jumpered.
R328	A8A2	Minimum signal amplitude at TP235 when J235 is jumpered.
R328	A8A2	Optimum vertical 'S' waveform when J235 is not jumpered.

18. Adjust X Offset (R111), DC Offset (R119), and Y Offset (R101)

ADJUSTMENT SEQUENCE

Adjustment	Location	Adjustment Setting
R111	A8A2	Minimum signal amplitude at TP137 when J117 is jumpered.
R119	A8A2	0 V trace dc level at TP137 when J117 and J130 are jumpered.
R101	A8A2	Minimum signal amplitude at TP137 when J130 is jumpered.
R111, R101	A8A2	Proper vertical 'B' waveshape at TP137 when J130 is not jumpered.

19. Adjust Y Offset (R142), X Offset (R242), and DC Offset (R250)

Adjust R142 and R242 for optimum flat-bottom waveform at TP161 on A8A2. Adjust R250 so bottom of waveform coincides with 0 V. Remove jumper from J600 and return it to the storage pins.

@

CONVERGENCE CONTROL A8A1,
RASTER CONTROL A9A1,
VERTICAL DEFLECTION A10A1
HORIZONTAL DEFLECTION A11A1
HORIZONTAL DELAY STABILIZER A11A2

20. Adjust Horiz Raster Centering (R149), Horiz Size Cal (R620), and Horiz Lin (R144). Select 'S' Caps.

ADJUSTMENT SEQUENCE

Adjustment	Location	Adjustment Setting
R925 (H Size)	A8A1	Set White Pedestal switch S720 on A8A1 to On. Turn R925 to make left and right sides of raster visible.
R920 (H Position)	A8A1	Crosshatch pattern is horizontally centered.
R925	A8A1	Set White Pedestal switch S720 on A8A1 to Normal. Turn R925 fully clockwise.
R149	A11A1	Center convergence crosshatch line is centered horizontally.
R620	A11A1	Full size display horizontally.
R144	A11A1	Best horizontal linearity.
'S' Cap Jumpers	A11A2	Optimum horizontal linearity.

21. Adjust Horizontal Size (R925), Lin Match (R432), and Horizontal Size Cal (R620)

ADJUSTMENT SEQUENCE

Adjustment	Location	Adjustment Setting
R432	A9A1	Midrange.
R925	A8A1	NTSC Standard: 6.00 V active-time ramp at TP474 on A8A1. 50 Hz PAL Standard: 6.32 V ramp.
R620	A11A1	NTSC Standard: Crosshatch pattern is 12/16 full size. 50 Hz PAL Standard: Crosshatch pattern is 15/19 full size.
R925	A8A1	Fully clockwise. (8 V active-time ramp at TP474 on A8A1.)
R432	A9A1	Full size display.

CONVERGENCE CONTROL A8A1
VERTICAL DEFLECTION A10A1
RASTER CONTROL A9A1

22. Adjust Vertical Size (R825), Vertical Position (R820), Vert Raster Centering (R551), Vert Size Cal (R553), Vert Lin Bal (R855), and Vertical Linearity (R651)

ADJUSTMENT SEQUENCE

Adjustment	Location	Adjustment Setting
R825	A8A1	Fully clockwise. (7.6 V linear portion of vertical ramp at TP675 on A8A1.)
R820	A8A1	0 V at center of linear portion of ramp at TP675 on A8A1.
R551	A10A1	Crosshatch pattern is vertically centered.
R553	A10A1	Full size display vertically.
R855	A9A1	Top half of display is same height as bottom half of display.
R551	A8A1	Crosshatch pattern is vertically centered.
R651	A9A1	Best vertical linearity at top and and bottom areas of display versus the center.

23. Adjust Side Pin/Tilt Gain (R755), Side Tilt (R652), T & B Pin Gain (R351), T & B Pin Balance (R454), T & B Tilt (R630), and T & B 'S' (R633)

ADJUSTMENT SEQUENCE

Adjustment	Location	Adjustment Setting
R755, R652	A9A1	Left and right sides of display are straight.
R351, R454 R630, R633	A9A1 A8A1	Top and bottom horizontal lines of display are straight.

24. Adjust Dynamic Focus Gain (R554), H Focus Cal (R324), and V Focus Cal (R640)

ADJUSTMENT SEQUENCE

Adjustment	Location	Adjustment Setting
R554	A9A1	Midrange.
R324	A9A1	12 V peak-to-peak horizontal focus waveform at TP851 on A9A1.
R640	A9A1	5 V peak-to-peak vertical focus waveform at TP851 on A9A1.

25. Adjust Primary and Secondary Convergence

See long form procedure.

VIDEO AMPLIFIER A13A1
CONVERGENCE CONTROL A8A1

26. Adjust +12 V Cal (R119)

Dc voltage at +12 V test point on A13A1 equals dc voltage at −12 V test point on A13A1.

27. Preadjust Black Level Preset (R905) and Input DC Bal (R525, R125)

Preset White Balance (R701, R705, R711), Black Balance (R801, R805, R811), Black Level Preset (R905), and Contrast Preset (R911) on A8A1 to midrange.

Video black level matches the black level sample for green, red, and blue amplifiers on A13A1 as follows:

Adjustment	Test Point on A13A1
R905 on A8A1	TP352 (Green)
R525 on A13A1	TP552 (Red)
R125 on A13A1	TP142 (Blue)

Note: Final adjustment of R905, R525, and R125 is performed in step 32.

28. Adjust Gain Cell Bal (R135, R335, R535)

Minimum movement of video black level and black level sample as CONTRAST control is varied.

Adjustment on A13A1	Test Point on A13A1
R135	TP142 (Blue)
R335	TP352 (Red)
R535	TP552 (Green)

29. Adjust Contrast Preset (R911)

Adjust R911 on A8A1 for 0.9 V peak-to-peak video amplitude at TP379 (Green) on A13A1.

CRT SOCKET A12
VIDEO AMPLIFIER A13A1
CONVERGENCE CONTROL A8A1

30. Adjust Red, Green, and Blue Output Amplifier Gain (R591, R391, R191)

Adjust for the following peak-to-peak video amplitudes.

Adjustment on A13A1	Test Point on A12	Video Amplitude
R591	TP437 (Red)	35 V
R391	TP419 (Green)	30 V
R191	TP410 (Blue)	25 V

31. Frequency Response Adjustments

Leave L173, L373, L573, R173, R400, and R600 on A13A1 at their factory-adjusted settings. Also, leave L409, L419, and L445 on A12 as they are.

CRT SOCKET A12
HIGH VOLTAGE REGULATOR A7A2A1
CONVERGENCE CONTROL A8A1
VIDEO AMPLIFIER A13A1

32. Adjust Green, Red, and Blue Screen (R148, R158, R138). Readjust Black Level Preset (R905) and Input DC Bal (R525, R125).

Adjust R148, R158, and R138 so the beam current sample interval of the video waveform is at −80 V.

Adjust R905, R525, and R125 for minimum movement of the video black level as the CONTRAST control is varied.

Adjustments & Board Location

A7A2A1	A13A1	A8A1	Test Point on A12
R148		R905	TP325 (Green)
R158	R525		TP337 (Red)
R138	R125		TP309 (Blue)

COLORIMETRY
(CONVERGENCE CONTROL A8A1)

33. Adjust Red, Green, and Blue White-Balance (R701, R705, R711)

With a 100% or 100 IRE flat field signal applied to the decoder interface module, adjust R701, R705, and R711 to obtain proper color balance at 30 foot lamberts.

Using an irradiance probe with the photometer, obtain individual red, green, and blue readings in $\mu W/cm^2$ for each beam.

34. Adjust Red, Green, Blue Black-Balance (R801, R805, R811)

With a 7.5 IRE (NTSC) or 0% (PAL, SECAM) flat field signal applied to the decoder interface module, depress the photometer X.1 push button. Adjust R801, R805, and R811 for the appropriate beam to be 1/200 times the photometer irradiance readings obtained in Step 33.

ADJUSTMENT PROCEDURE
(Long Form)

Preliminary Steps

A. Remove the dust covers from the 690SR.

B. Be sure that the internal jumpers and switches are set to their factory-set or normal operating positions before starting the Adjustment Procedure.

NOTES

1. Use Table 4-1 in Section 4 as a reference for the jumper settings.

2. Use the Service Illustration pullout pages in Section 12 to find the physical locations of jumpers, test points, adjustments, and multi-pin connectors called out in the Adjustment Procedure.

C. Insert a decoder interface module into the 690SR mainframe.

D. Connect the 690SR power cord to the variable autotransformer.

E. Connect the variable autotransformer to a nominal 115 V ac mains source.

F. Connect a 1 V full field color bar luminance signal to the decoder interface module Video Input A connector. Connect a 75 Ω end-line termination to the Video Input A loop-through connector. See Fig. 7-1.

G. Use Fig. 7-1 as a guide for setting the front-panel controls of the equipment.

H. Set the variable autotransformer for a 115 V output reading.

I. Allow the equipment to warm up for at least 45 minutes.

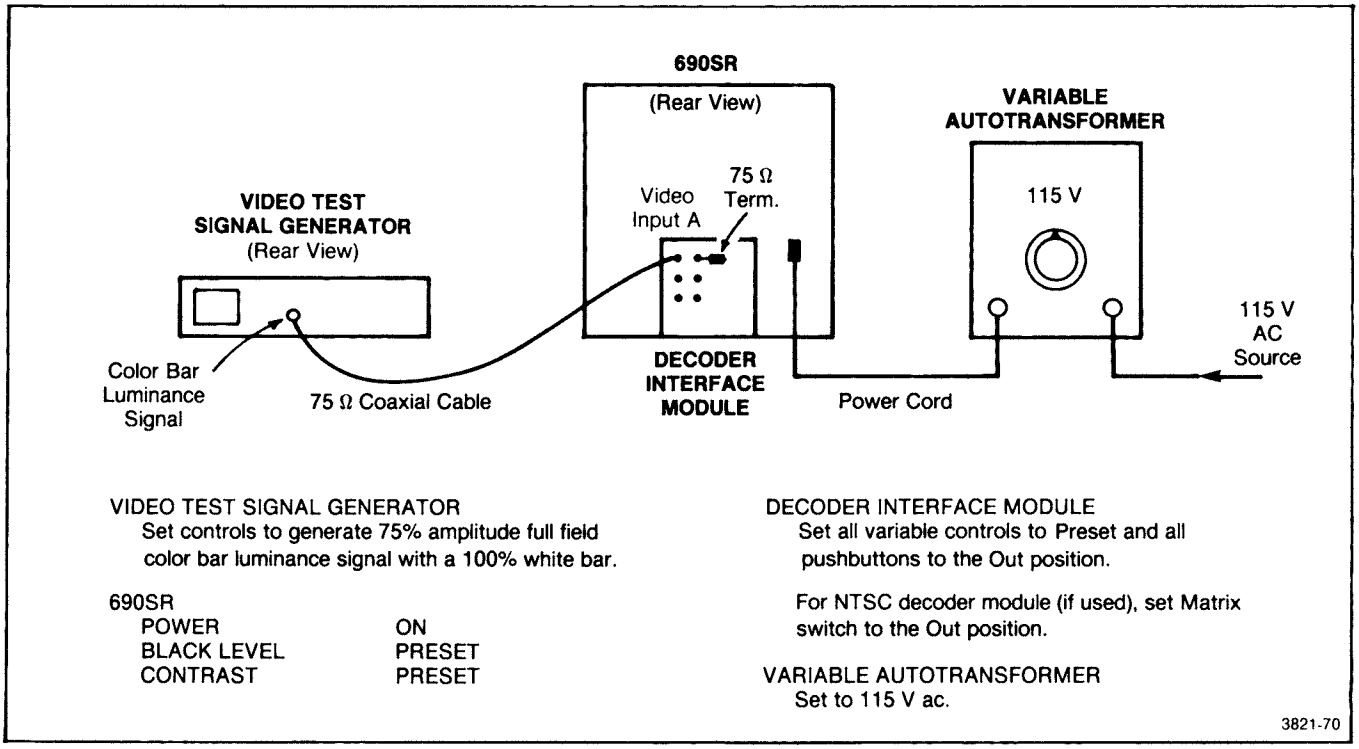

Fig. 7-1. Initial setup described in Preliminary Steps.

LOW VOLTAGE POWER SUPPLY A7A1

1. Adjust Low Voltage Cal (R462)

a. Use the same equipment setup as shown in Fig. 7-1.

b. Connect an accurate multimeter between ground (pin 2 of the Minimum Load Connector J402) and pin 4 of J402 on the LV Power Supply Output board A7A1A3.

c. ADJUST—R462 (Low Voltage Cal) on the Power Supply Inverter board, A7A1A2, to obtain a readout of +15.3 V, ±0.05 V.

d. Disconnect the multimeter.

2. Adjust Volts Null Cal (R463)

a. Use the same equipment setup as shown in Fig. 7-1.

b. Connect an accurate multimeter between ground (pin 2 of the Mininum Load Connector J402 on A7A1A3) and TP460 located on A7A1A2.

c. ADJUST—R463 (Volts Null Cal) on A7A1A2 for 0 V at TP460 on A7A1A2.

d. Disconnect the multimeter.

3. (Optional) Check LV Power Supply Regulation and Ripple

a. Use the autotransformer to set the mains voltage to low line (103 V) and high line (127 V) when performing part c of this step

b. Use an accurate multimeter to monitor and measure the voltage in Table 7-3. Use a test oscilloscope with a 10X probe to measure the ripple. The test points are located at the Minimum Load Connector J402 on the LV Power Supply Output board, A7A1A3.

c. CHECK—regulation and ripple using Table 7-3. Use pin 2 of J402 for the ground connection.

TABLE 7-3
CHECK LV POWER SUPPLY

J402 Test Points on A7A1A3	Power Supply	Tolerance	Mains Frequency Ripple
Pin 1	−15.3 V	±0.3 V	420 mV
Pin 3	+8 V	±0.6 V	140 mV
Pin 4	+15.3 V	±50 mV	420 mV
Pin 6	+200 V	±5 V	1.8 V

d. Disconnect the digital multimeter and test oscilloscope 10X probe from the test points.

e. Disconnect the variable autotransformer and connect the 690SR power cord directly to the 115 V ac mains source.

HIGH VOLTAGE REGULATOR A7A2A1

4. Adjust High Voltage Cal (R452)

a. Use Fig. 7-2 as a guide for connecting the equipment and setting the front-panel controls.

b. Check that the digital multimeter is connected to J450, pins 1 and 2 (lower two pins), on the High Voltage Regulator board, A7A2A1, as indicated in Fig. 7-2. Be sure that the input impedance of the multimeter is 10 MΩ or higher. (Note: J450 is labeled J209 on the cover of some instruments.)

CAUTION

Avoid using a low multimeter range setting to prevent shutting down the high voltage supply.

c. ADJUST—R452 (High Voltage Cal) on A7A2A1 for a 7.8 V reading between pins 1 and 2 of J450. (This voltage drop causes the anode voltage to be 25 kV within a tolerance of ±1 kV.)

d. Disconnect the digital multimeter from the test points.

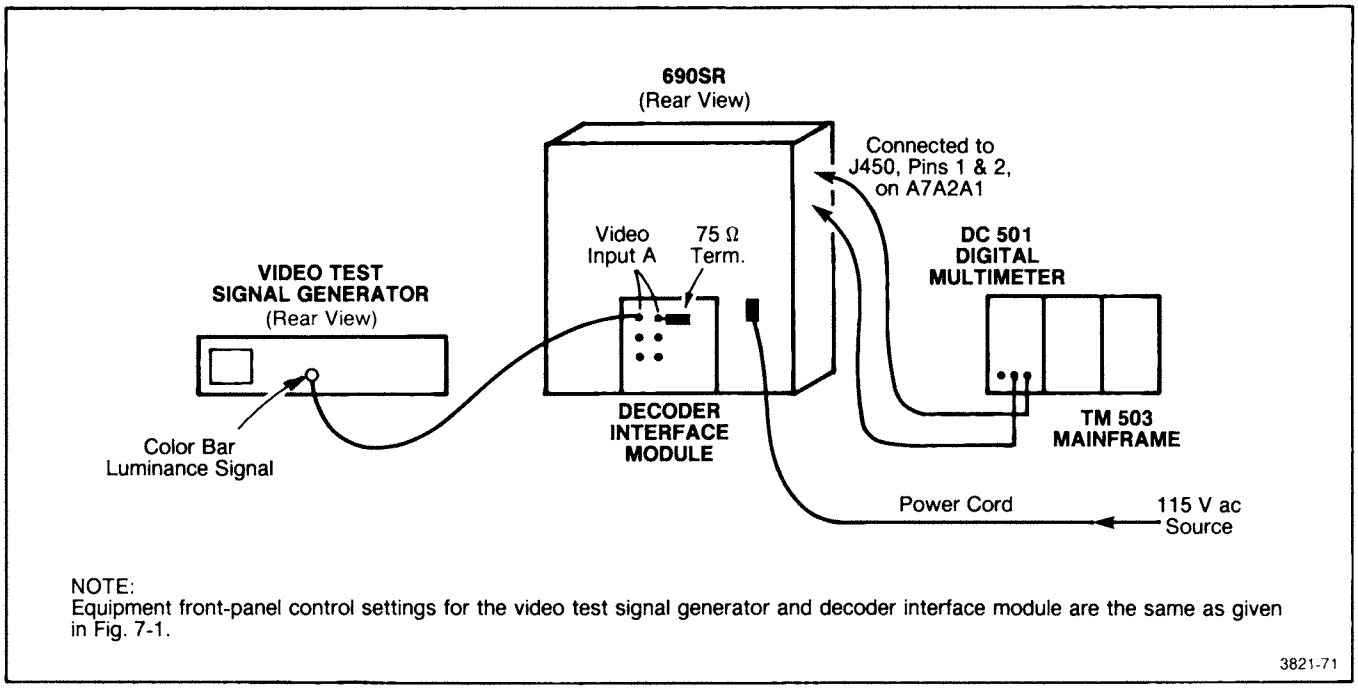

Fig. 7-2. Equipment setup conditions for adjusting the high voltage supply.

5. Adjust Overload Threshold (R433)

a. Use Fig. 7-3 as a guide for the equipment setup conditions and control settings.

b. With no light entering the J6503 Luminance Probe, depress the J16 X0.1 push button and zero the J16 Digital Photometer.

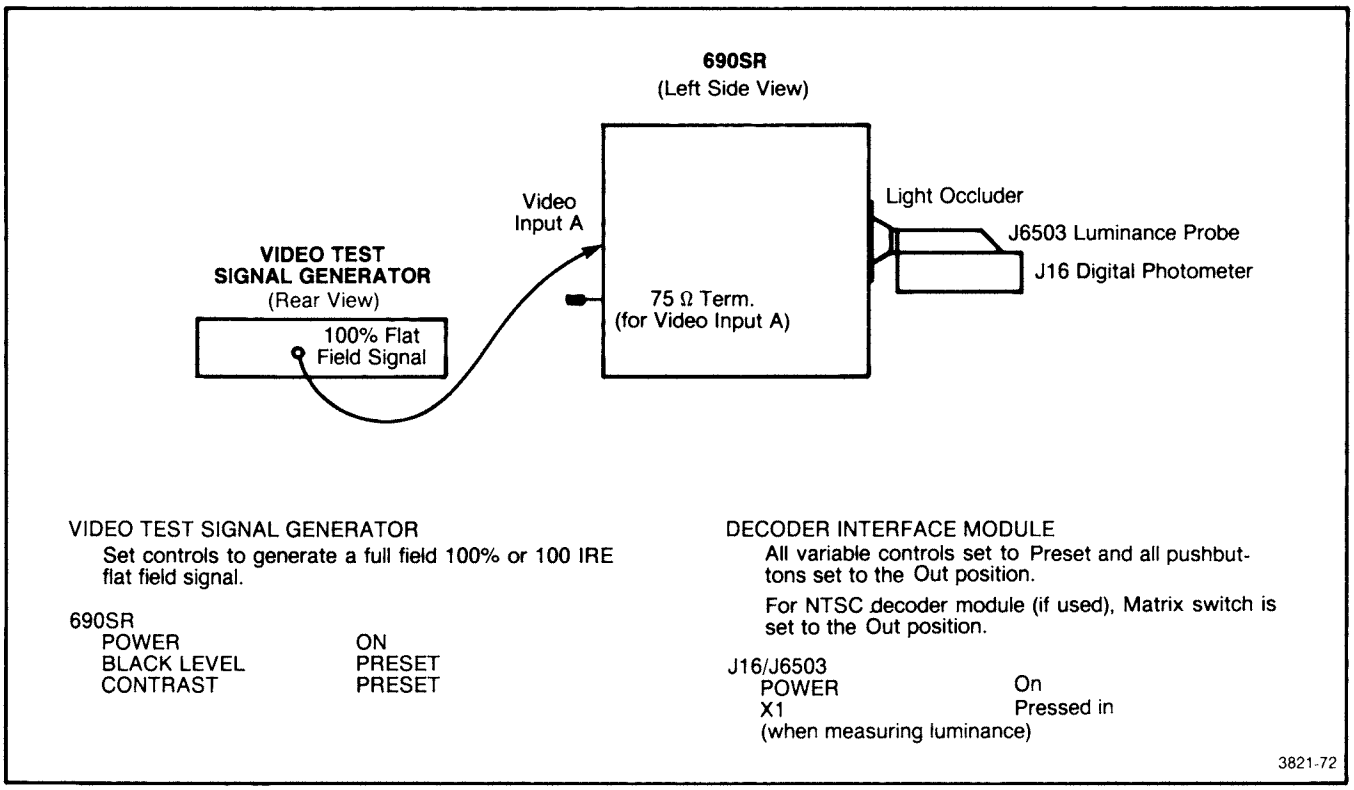

Fig. 7-3. Equipment setup conditions for adjusting overload threshold.

c. Depress the J16 X1 push button and place the J6503 Probe close to the 690SR faceplate at the center of the screen.

d. Turn the 690SR front-panel BLACK LEVEL and CONTRAST controls to obtain a J16 reading of 62 foot lamberts.

e. Remove the J16/J6503 Photometer from the faceplate of the 690SR. Set the J16 Power switch to Off.

f. ADJUST—R433 (Overload Threshold) so that neon DS251 just starts to flash. Resistor R433 and DS251 are located on the High Voltage Regulator board, A7A2A1.

g. Return the BLACK LEVEL and CONTRAST controls to their PRESET position.

HORIZONTAL DELAY STABILIZER A11A2

6. Adjust Horizontal Retrace Delay (R436)

NOTE

Horizontal retrace delay can be checked without extending the horizontal deflection assembly A11. To check if R436 needs to be adjusted, perform step 14 in the Performance Check Procedure of Section 6.

a. Use the equipment setup conditions and front-panel control settings shown in Fig. 7-4 as a guide. Note that the horizontal deflection assembly A11 is extended using the rigid module extender card. Use one of the removed screws to hold the top end of the assembly secure.

b. CHECK—that the reference voltage across zener VR315 is between 3.9 and 4.3 volts. VR315 may need to be selected for a voltage within this range, to ensure that the sample pulse (TP225) occurs during the timing ramp (TP332) ramp time.

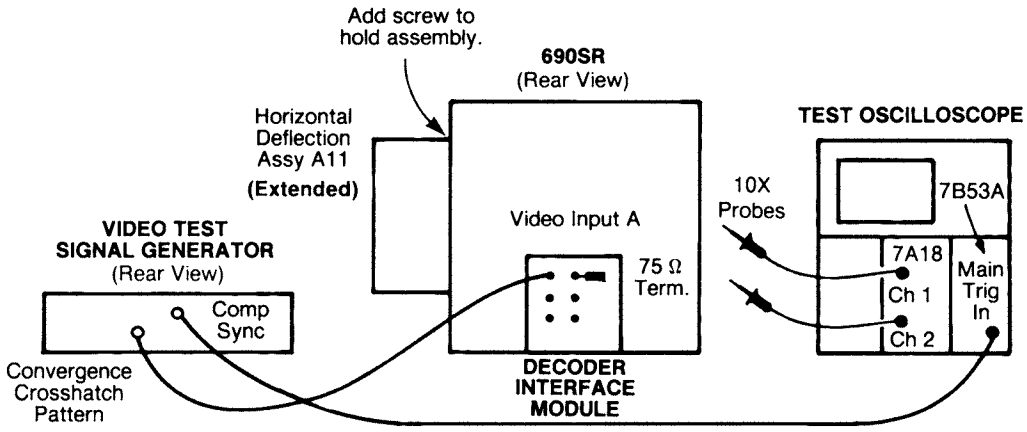

VIDEO TEST SIGNAL GENERATOR
Set controls to generate a full field convergence crosshatch pattern.

690SR

POWER	ON
BLACK LEVEL	PRESET
CONTRAST	PRESET

DECODER INTERFACE MODULE
All variable controls set to Preset and all pushbuttons set to the Out position.

For NTSC decoder module (if used), Matrix switch is set to the Out position.

TEST OSCILLOSCOPE

Ch 1 & Ch 2 Input Coupling	DC
Ch 1 & Ch 2 Deflection Factor	5 V/div
Ch 2 Polarity	+ Up
Display Mode	Alt
Triggering	Ext, Auto, Ac
Magnifier	X1
Sweep Rate	10 μs/div

3821-73

Fig. 7-4. Equipment setup conditions for adjusting horizontal retrace delay.

c. Connect a 10× probe from CH 1 to TP228 on the Horizontal Delay Stabilizer board, A11A2. Connect another 10× probe from Ch 2 to TP120 on A11A2.

d. Use Fig. 7-5A and 7-5B as a guide for displaying the waveforms on the test oscilloscope.

e. ADJUST—R436 (Horizontal Retrace Delay) on A11A2 so the rising edge of the Ch 2 waveform at TP120 is delayed 13 μs from the falling edge of the Ch 1 waveform at TP228. Figure 7-5B shows the proper delay time.

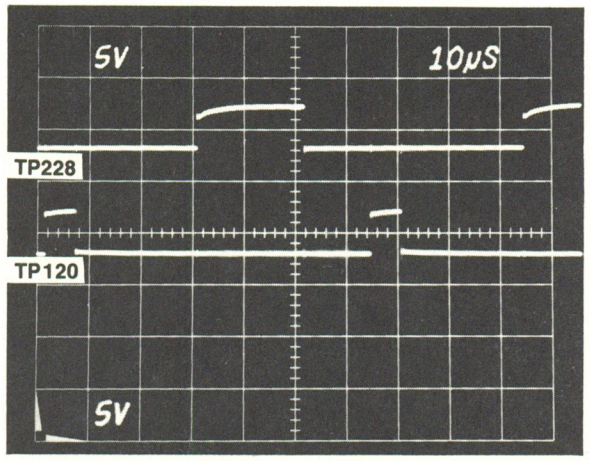

(A) Main sweep display.

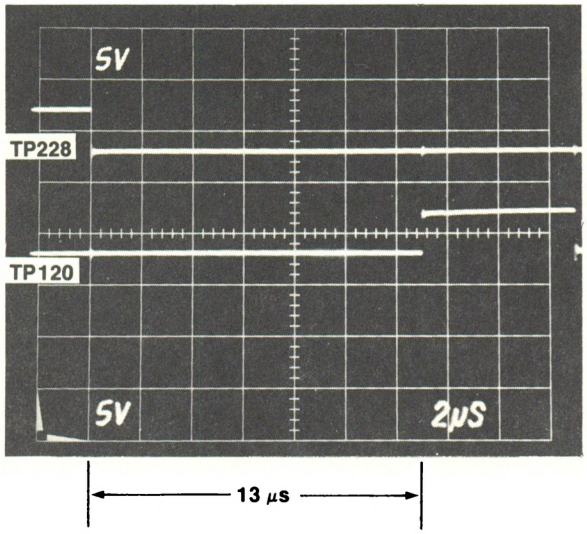

(B) Using delaying sweep to measure horizontal delay.

3821-74

Fig. 7-5. Adjusting R436 on A11A2 for proper horizontal delay.

f. Disconnect the 10× probes from the test points.

g. Set the 690SR POWER switch to OFF, remove the screw holding the horizontal deflection assembly, remove the rigid module extender card, and reinstall the horizontal deflection assembly in the mainframe.

NOTE

Dress the yoke wire leads as close to the chassis and as far from the crt socket as is possible to prevent crosstalk to the video amplifier.

VERTICAL DEFLECTION A10A1

CAUTION

When adjusting for minimum crossover distortion in steps 7 through 9, do not rotate the adjustment too far clockwise. Excessive standing current can cause damage to the amplifier.

7. Adjust T & B Pin Crossover Distortion (R640)

a. The equipment setup conditions are the same as shown in Fig. 7-4 except the horizontal deflection assembly is not extended. Instead, the vertical deflection assembly A10 is extended as described in part b of this step.

b. Continuing from step 6f, check that the 690SR POWER switch is set to OFF. Remove the vertical deflection assembly. Use the rigid module extender card to operate the vertical deflection assembly extended from the mainframe. Use one of the removed screws to hold the assembly securely in position. Set the 690SR POWER switch to ON.

c. Check that pins 2 and 3 of J542 on A10A1 are jumpered.

d. Connect a 10× probe from Ch 1 to TP728 on A10A1. Connect the other 10× probe from Ch 2 to TP748 on A10A1.

e. Set the 7A18 Dual-Trace plug-in unit controls as follows:

Ch 1 and Ch 2 Input Coupling	Gnd
Ch 1 and Ch 2 Deflection Factor	500 mV/div
Ch 2 Polarity	Invert
Display Mode	Chop

f. Set the test oscilloscope sweep rate to 2 ms/div and position both traces so they are overlaying the graticule centerline. Then, set the Ch 1 and Ch 2 Input Coupling switches to DC, the Main Triggering Level control fully clockwise and depress the AC LF Rej push button. The waveforms should appear similar to those shown in Fig. 7-6A.

g. ADJUST—R640 (T & B Pin Crossover Distortion) on A10A1 for no crossover distortion (see Fig. 7-6A) without turning the adjustment too far clockwise, that will cause excessive standing current as shown in Fig. 7-6B.

Figure 7-6C shows an example of crossover distortion obtained when R640 is misadjusted too far counterclockwise.

h. Disconnect the 10X probes from the test points.

i. Set the 690SR POWER switch to OFF and remove the screw that holds the vertical deflection assembly. Remove the rigid module extender card and reinstall the assembly in the mainframe.

CONVERGENCE OUTPUT A14A1

8. Adjust Blue, Green, Red, and Blue Lateral Crossover Distortion (R648, R542, R342, R141)

CAUTION

Avoid rotating the Crossover Distortion adjustments too far clockwise. Overadjustment may cause damage to the amplifier.

a. Use Fig. 7-7 as a guide for equipment setup conditions and front-panel control settings. Note that the convergence output assembly A14 is extended from the mainframe. Add a screw to the top of the assembly to hold it securely. Set the 690SR POWER switch to ON.

b. Check that pins 2 and 3 of J853 on A14A1 are jumpered.

c. Connect the 10X probes from the 7A18 Dual-Trace plug-in unit to TP717 and TP747 on the Convergence Output board, A14A1.

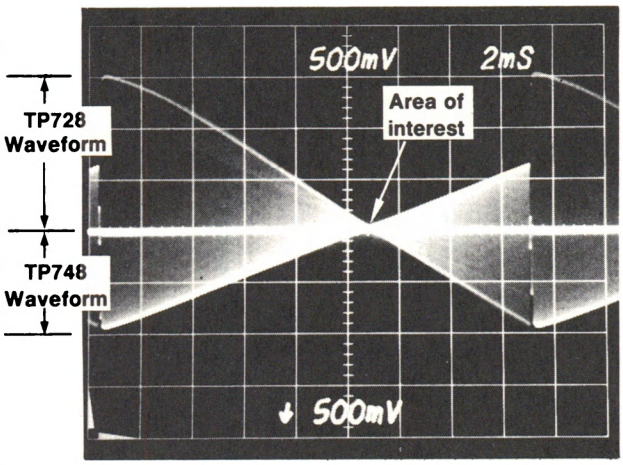

(A) Properly adjusted. TP748 waveform is inverted.

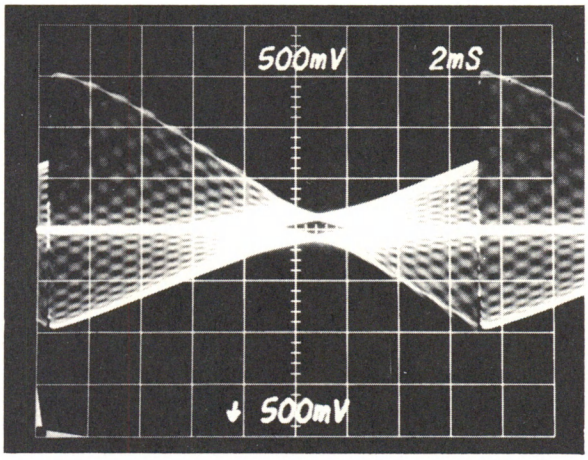

(B) R640 misadjusted clockwise.

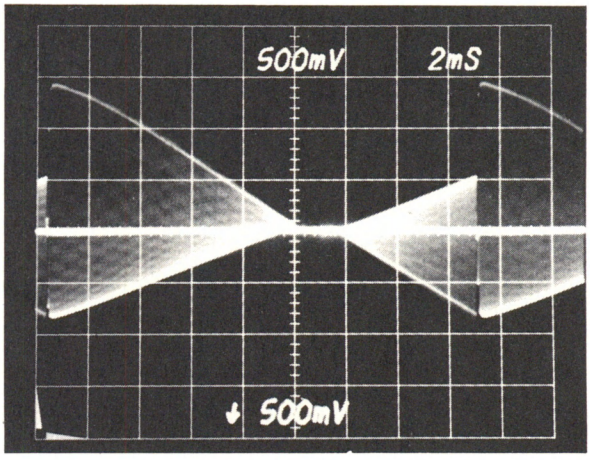

(C) R640 misadjusted counter clockwise.

3821-75

Fig. 7-6. Typical dual-trace waveforms obtained when adjusting R640 on A10A1.

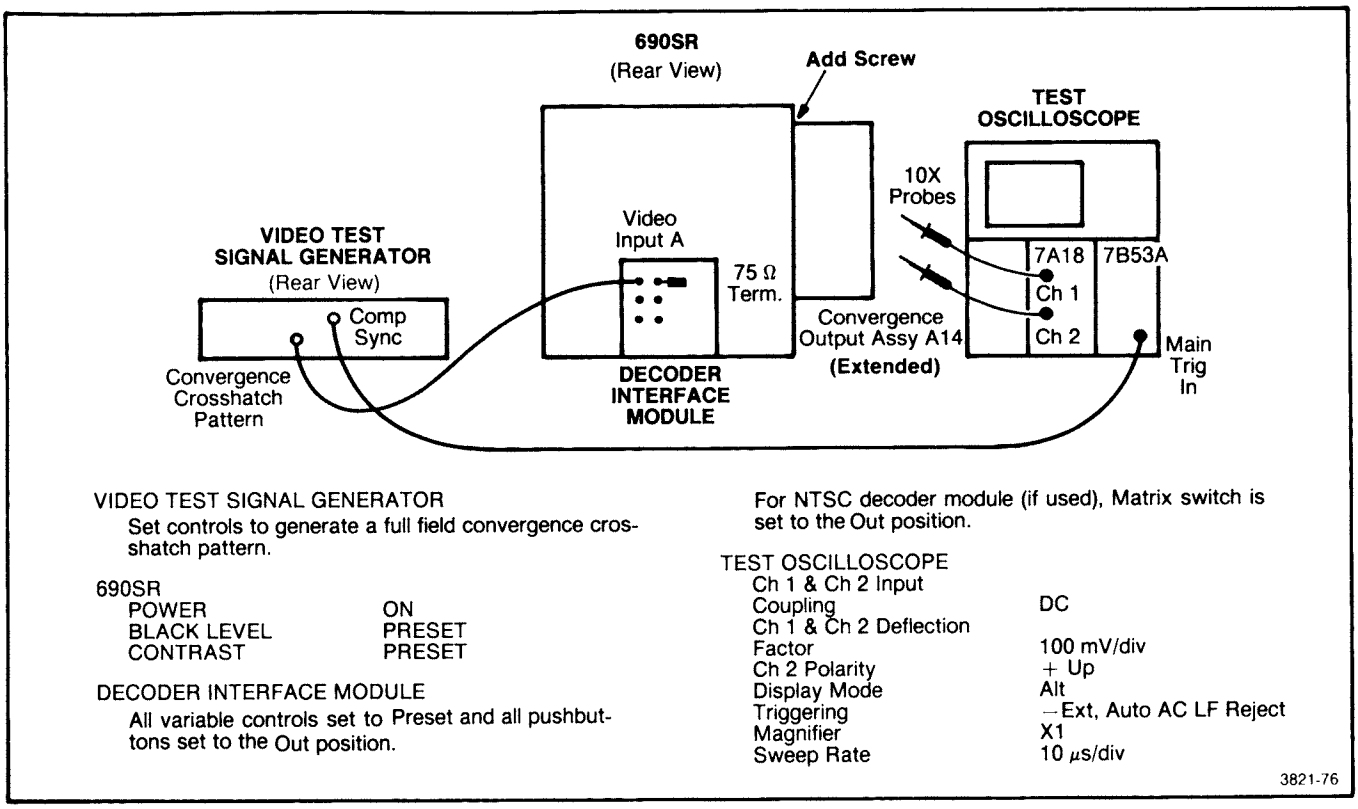

Fig. 7-7. Equipment setup conditions for adjusting convergence crossover distortion.

d. Set the dual-trace unit Input Coupling switches to Gnd and position the traces so they are overlayed one division below the graticule centerline. Set the Input Coupling switches to DC.

e. The test oscilloscope display should appear similar to the waveform shown in Fig. 7-8A. If not, note the position of the Primary Convergence control, R455, on A8A1 in the drawer. Then, rotate R455 until the waveform is similar to Fig. 7-8A.

f. ADJUST—R648 (Blue Crossover Adjust) on A14A1 for minimum crossover distortion and standing current. Figure 7-8B shows excessive standing current when R648 is turned too far clockwise. Figure 7-8C shows an example of a waveform obtained when R648 is misadjusted too far counterclockwise. Return R455 to the setting noted in part e of this step.

g. ADJUST—Using the procedure for adjusting R648 as a guide, adjust R542, R342, and R141 on A14A1. Table 7-4 lists the test points and Primary Convergence control associated with each adjustment. After completing each adjustment, return the Primary Convergence control to its former setting.

Table 7-4
ADJUSTING CONVERGENCE CROSSOVER DISTORTION

Adjustment on A14A1	Test Points on A14A1	Primary Convergence Control on A8A1	Typical Waveform
R542 (Green)	TP517, TP547	R350	Fig. 7-8D
R342 (Red)	TP317, TP348	R355	Fig. 7-8E
R141 (Blue Lateral)	TP211, TP242	R450	Fig. 7-8F

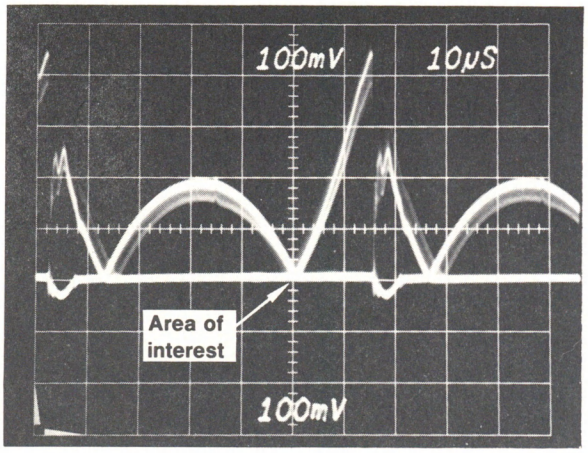

(A) R648 properly adjusted.

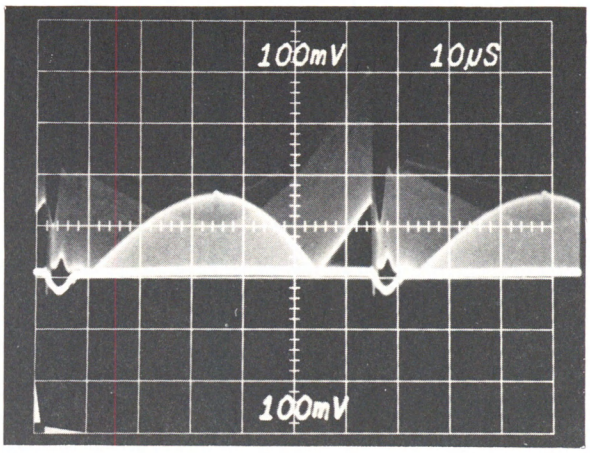

(D) R542 properly adjusted.

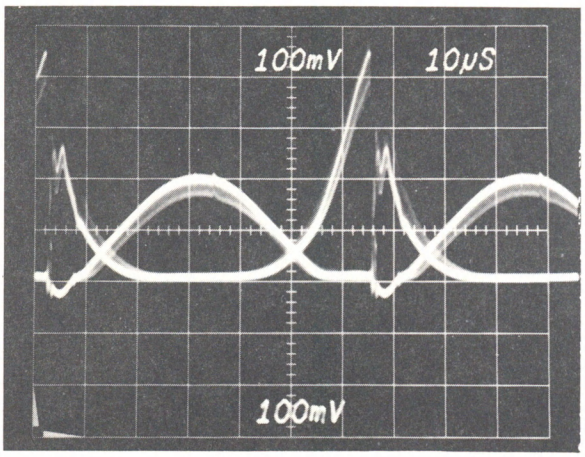

(B) R648 misadjusted clockwise.

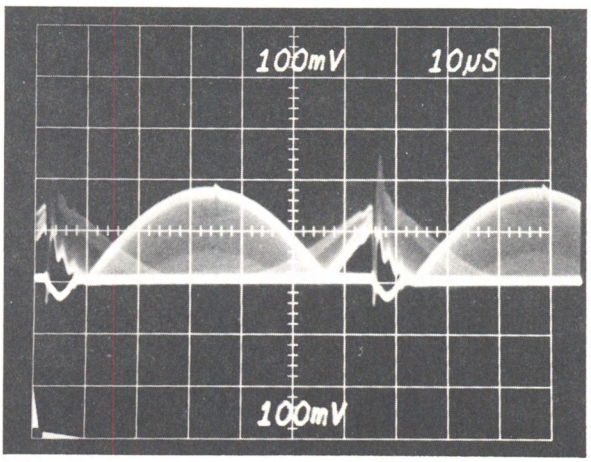

(E) R342 properly adjusted.

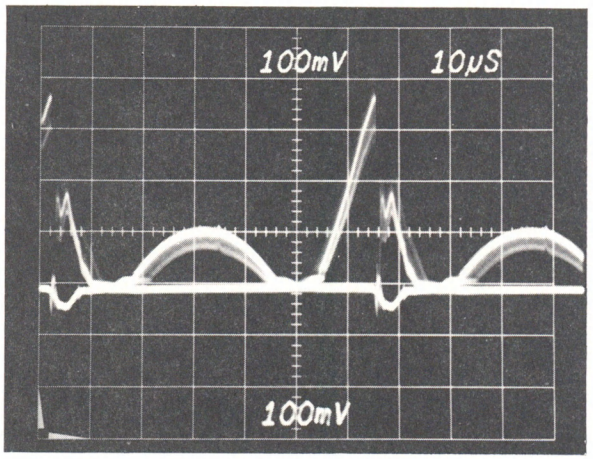

(C) R648 misadjusted counterclockwise.

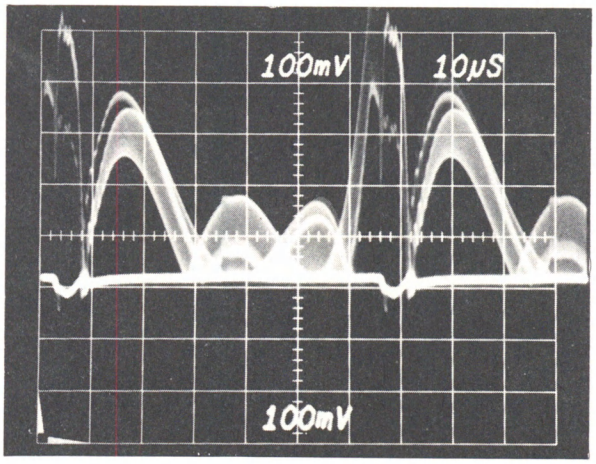

(F) R141 properly adjusted.

3821-77

Fig. 7-8. Typical dual-trace waveforms obtained when adjusting for minimum crossover distortion.

NOTE

The waveforms obtained when performing this step may differ from those shown in Fig. 7-8. The differences are due to the settings of the Primary and Secondary Convergence Controls.

h. Disconnect the 10× probes from the test points.

i. Set the 690SR POWER switch to OFF, remove the rigid module extender card, and reinstall the convergence output assembly in the mainframe.

RASTER CONTROL A9A1 CONVERGENCE CONTROL A8A1

9. Adjust Slope (R240), Horiz Ramp Cal (R928), and DC Level (R145)

NOTE

The Convergence Control board, A8A1, is designed to have certain amplitude signals so that the convergence control adjustments will be centered within their ranges. In order to have the proper amplitude signals applied to the Convergence Control board, a 7 V ramp must represent full-screen deflection in both the vertical and horizontal directions. An NTSC television signal requires the 690SR to overscan considerably. Full-screen deflection is still represented by 7 V ramps; but, to obtain a full size television picture, 7.6 V is needed in the vertical direction and 8.0 V is needed in the horizontal direction. The 7.6 V and 8.0 V ramp amplitudes are necessary because the picture blanking time is longer than the monitor's retrace time.

a. Use the same equipment setup conditions as shown in Fig. 7-7 except as follows: Check that 690SR POWER switch is set to OFF. Extend the raster control assembly A9 from the mainframe using the rigid module extender card. Remove the Convergence Control panel (7 screws) for access to R928 and R827 on A8A1. Set the 690SR POWER switch to ON.

b. Connect both the Ch 1 and Ch 2 10× probes from the 7A18 Dual-Trace Amplifier plug-in unit to test point TP230 on A9A1.

c. Set the test oscilloscope controls as follows:

Ch 1 & Ch 2 Input Coupling	DC
Ch 1 & Ch 2 Deflection Factor	1 V/div
Ch 2 Polarity	Invert
Display Mode	Add
Triggering	−Ext, Auto, AC LF Reject
Magnifier	X1
Sweep Rate	100 μs/div

d. Rotate the test oscilloscope Ch 2 Variable Volts/Div control to null the waveform.

e. Move the Ch 2 10X probe to TP251 on A9A1.

f. ADJUST—R240 (Slope) on A9A1 to obtain a straight-line display as shown in Fig. 7-9A. Figure 7-9B shows an example of a waveform obtained when R240 is misadjusted.

g. Move the Ch 1 and Ch 2 10× probes to TP474 and TP473, respectively, on A8A1. Set the test oscilloscope controls as follows:

Ch 2 Deflection Factor	5 V/div
Ch 2 Variable Volts/Div	Cal
Ch 2 Polarity	+Up
Display Mode	Alt
Sweep Rate	5 μs/div

h. Rotate the H Size control (R925) on A8A1 fully clockwise.

i. ADJUST—R928 (Horiz Ramp Cal) on A8A1 so the active portion of the ramp at TP 474 is 8 V peak-to-peak in amplitude. Figure 7-9C shows how to measure the ramp active time. (Active time is when the waveform at TP473 is low.) Adjust R145 (DC Level) on A9A1 so the center of the active portion of the ramp is at 0 V.

j. Disconnect the 10X probes from the test points.

k. Set the 690SR POWER switch to OFF, and reinstall the raster control assembly in the mainframe. Set the POWER switch to ON.

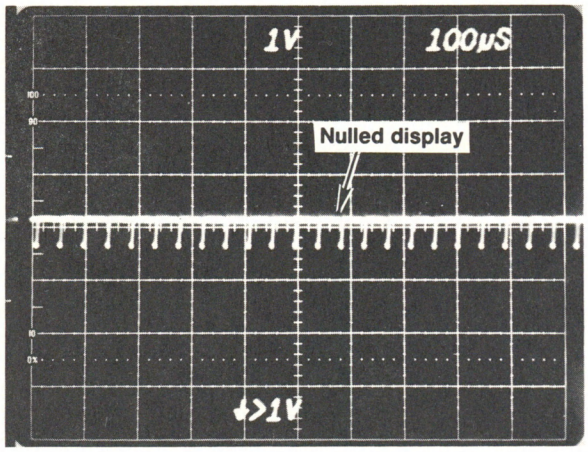

(A) Adjusting R240 (Slope) on A9A1 to null the A-B display obtained at TP230 and TP251 on A9A1.

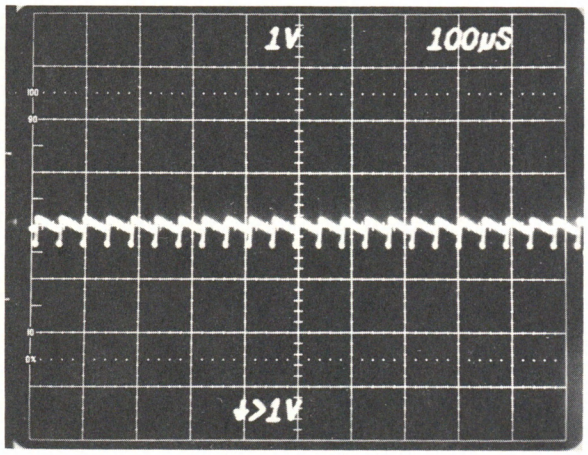

(B) R240 misadjusted.

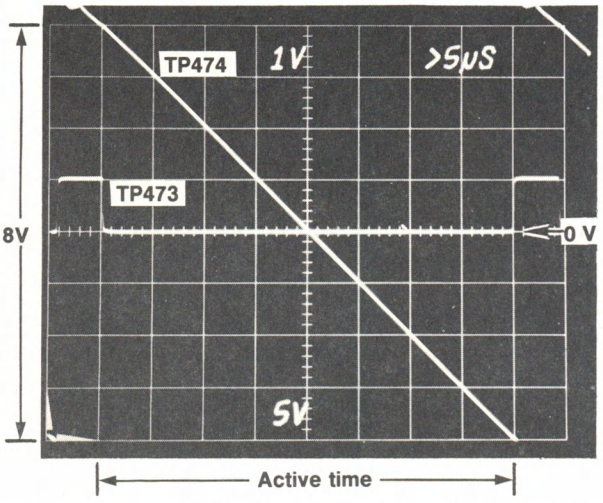

(C) Adjusting R928 (Horiz Ramp Cal) on A8A1 to obtain an 8 V active-time ramp at TP474 on A8A1.

3821-78

Fig. 7-9. Typical waveforms obtained when performing step 9.

10. Adjust Vert Ramp Cal (R827) and Vertical Position (R820)

a. Use the same equipment setup conditions as shown in Fig. 7-7 except none of the 690SR assemblies are extended at this time. The test oscilloscope controls are the same as given in Fig. 7-7 except as follows:

Ch 1 Deflection Factor	1 V/div
Display Mode	Ch 1
Triggering Level	Fully cw (Set to trigger on vertical-rate signal)
Sweep Rate	2 ms/div

b. Connect the test oscilloscope Ch 1 10X probe to TP675 on A8A1 (TP675 is located under the P470 ribbon cable on earlier instruments).

c. Rotate the Vertical Size control (R825) on A8A1 fully clockwise.

d. Rotate the test oscilloscope Variable Time/Div control so the linear portion of the vertical ramp occupies 8 horizontal divisions. Use Fig. 7-10 as a guide.

e. ADJUST—R827 (Vert Size Range) on A8A1 so the linear portion of the ramp is 7.6 V peak-to-peak in amplitude. See Fig. 7-10. Set R820 (Vertical Position) so the center of the linear ramp is at 0V.

f. Set the 690SR POWER switch to OFF. Disconnect the 10× probe from TP675. Reinstall the Convergence Control panel on A8A1. Set the 690SR POWER switch to ON.

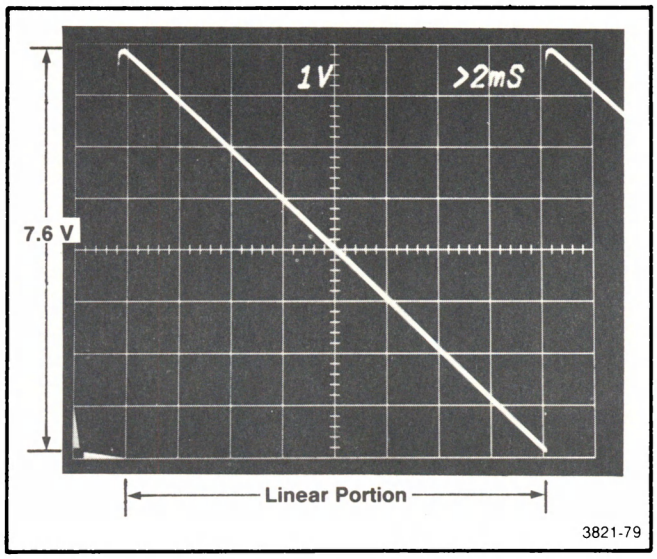

3821-79

Fig. 7-10. Proper amplitude vertical ramp at TP675 on A8A1. The Vertical Position control (R820) sets the dc level.

HIGH VOLTAGE FOCUS A7A2A2

11. Adjust Static Focus (R260)

a. Use the same equipment setup conditions and control settings as shown in Fig. 7-7 except none of the 690SR assemblies need to be extended and the test oscilloscope is not used.

b. Check that the convergence crosshatch pattern is displayed on the 690SR crt.

c. ADJUST—R260 (Static Focus) on A7A2A2 for optimum focused crosshatch lines.

CONVERGENCE CONTROL A8A1
VERTICAL DEFLECTION A10A1
HORIZONTAL DEFLECTION A11A1

12. Adjust Purity, Primary and Static Convergence, Vert Raster Centering (R551) and Horizontal Raster Centering (R149)

NOTE

Convergence is coarsely adjusted in this step. Final convergence is performed in step 25.

a. Use the same equipment setup conditions and control settings as shown in Fig. 7-7, except none of the 690SR assemblies need to be extended at this time and the test oscilloscope is not used. Check that pins 1 and 2 of J720 on A11A1 are jumpered.

b. Degauss the crt, chassis, and surrounding area using a color television degaussing coil.

c. Depress the 690SR DEGAUSS push button for at least 5 seconds.

d. Set the Secondary Convergence switch (S626) on A8A1 to the Off position.

NOTE

Leave the Secondary Convergence switch (S626) on A8A1 in the Off position while performing steps 12e through 25e.

e. PREADJUST—the Primary Convergence controls on A8A1 by following the numbered sequence given in Fig. 7-11. Adjust the controls for fair convergence.

f. Set the Static Convergence switch (S620) on A8A1 to the Cal position. Remove the crt neck shield (4 screws) for access to the adjustments located on the neck of the crt.

g. ADJUST—static convergence adjustments located on the neck of the crt. These are: Blue Vertical, Blue Lateral, Red Static, and Green Static as shown in Fig. 7-12.

h. Set the video signal generator controls so that a 100% or 100 IRE flat field signal is displayed.

i. Set the 690SR Green and Blue Screen switches (S606 and S612) on A8A1 to the Off position so that only a red flat field display is obtained.

j. ADJUST—purity by rotating the purity tabs shown in Fig. 7-12. The display should be uniformly red. If impurity is present, loosen the two yoke clamps. Fig. 7-12 shows one of the yoke clamps that must be loosened first. The second clamp is shown in Fig. 9-6 of Section 9, and is loosened by turning the front retaining clamp adjustment counterclockwise until the yoke can be moved. Move the yoke forward, and readjust the purity tabs to move the red area to the center of the screen. Move the yoke back to a location where a uniformly red display is obtained. If necessary, readjust the purity tabs and yoke position until a uniformly red display is obtained. Tighten the yoke clamps, rear clamp first and then the front clamp, after checking that the display is not tilted.

k. Set the Green Screen switch (S606) to On and the Red Screen switch (S602) to Off. Check that the display is uniformly green.

l. Set the Blue Screen switch (S612) to On and the Green Screen switch (S606) to Off. Check that the display is uniformly blue.

m. If impurity is present when performing parts k and l of this step, repeat parts i and l until optimum purity of colors are achieved. Then, set the Red and Green Screen switches to On. Check that the Blue Screen switch is set to On.

n. INTERACTION—If necessary, repeat parts g through m of this step.

o. Set the video test signal generator controls so that a convergence crosshatch pattern is displayed.

p. ADJUST—R551 (Vert Raster Centering) on A10A1 and R149 (Horizontal Raster Centering) on A11A1 to center the display.

q. Set the Static Convergence switch (S620) on A8A1 to the Normal position.

r. READJUST—the Primary Convergence controls on A8A1 for best convergence by following the numbered sequence illustrated in Fig. 7-11.

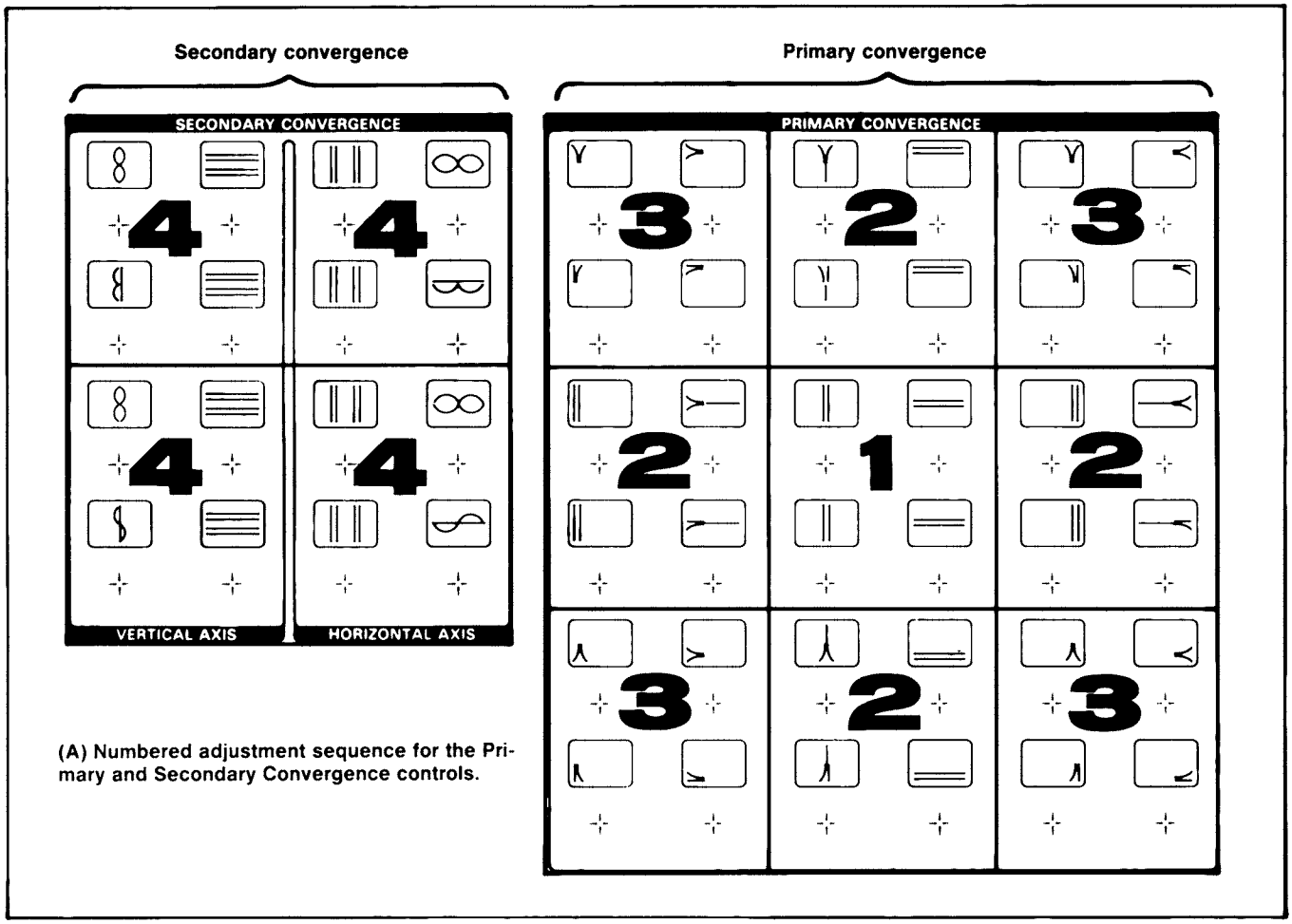

(A) Numbered adjustment sequence for the Primary and Secondary Convergence controls.

(B) Function of the four controls in each group. Applies to the Primary and Secondary Convergence controls.

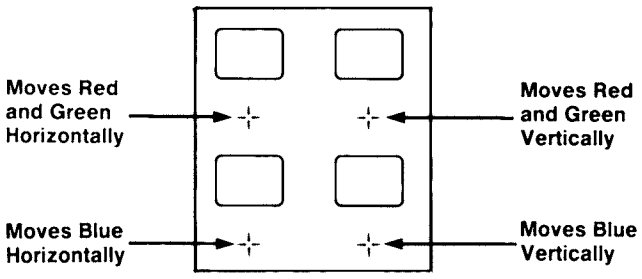

3821-80

Fig. 7-11. Convergence control layout and control function. These controls are located on the Convergence Control board A8A1 in the front drawer.

s. Leave the Secondary Convergence switch (S626) on A8A1 to the Off position while performing steps 13 through 25e.

13. Adjust DC Offset (R500), X/Y Offset (R403), and DC Level (R805)

a. Use the same equipment setup conditions and control settings as shown in Fig. 7-7 except none of the assemblies are extended unless R145 in part f of this step needs to be readjusted. Check that the Secondary Convergence switch (S626) on A8A1 is set to the Off position.

b. Disconnect P827 from J827 on the Convergence Control board, A8A1. Remove the four screws that hold down the Convergence Control board, A8A1, and swing the board back to its vertical position.

c. Take a spare jumper from its storage pins (J700) on A8A2. Install the jumper on pins 3 and 4 of J600 on A8A2. Leave this jumper in this position through step 19f.

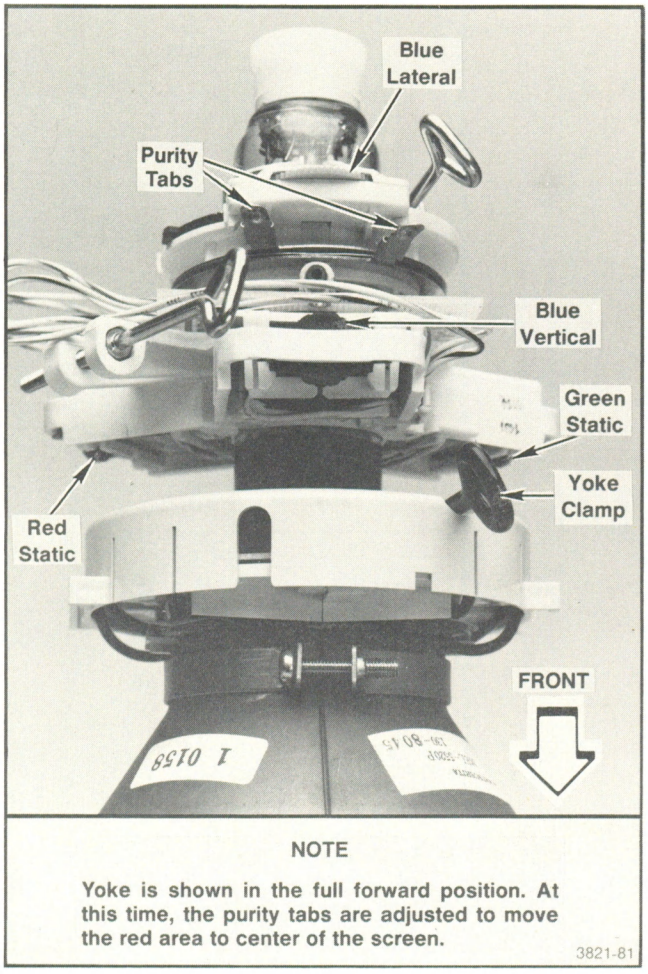

Fig. 7-12. Location of crt yoke clamp, purity tabs and static convergence adjustments.

d. Connect the 10× probe from Ch 1 of the 7A18 Dual-Trace plug-in unit to TP500 on A8A2. Connect the Ch 2 10X probe to TP501 on A8A2. Set Ch 1 deflection factor to 1 V/div and Ch 2 deflection factor to 10 V/div.

e. READJUST—the H Size control (R925) on A8A1 so the active portion of the ramp is 7 V in amplitude as shown in Fig. 7-13A.

f. CHECK—Using Fig. 7-13B as a guide, set the test oscilloscope controls to check that the center of the active portion of the ramp is at 0 V. If necessary, extend the raster control assembly, A9, and readjust R145 (DC Level) on A9A1 so the center of the active ramp is at 0 V. Remove the rigid module extender card and reinstall A9 in the 690SR mainframe.

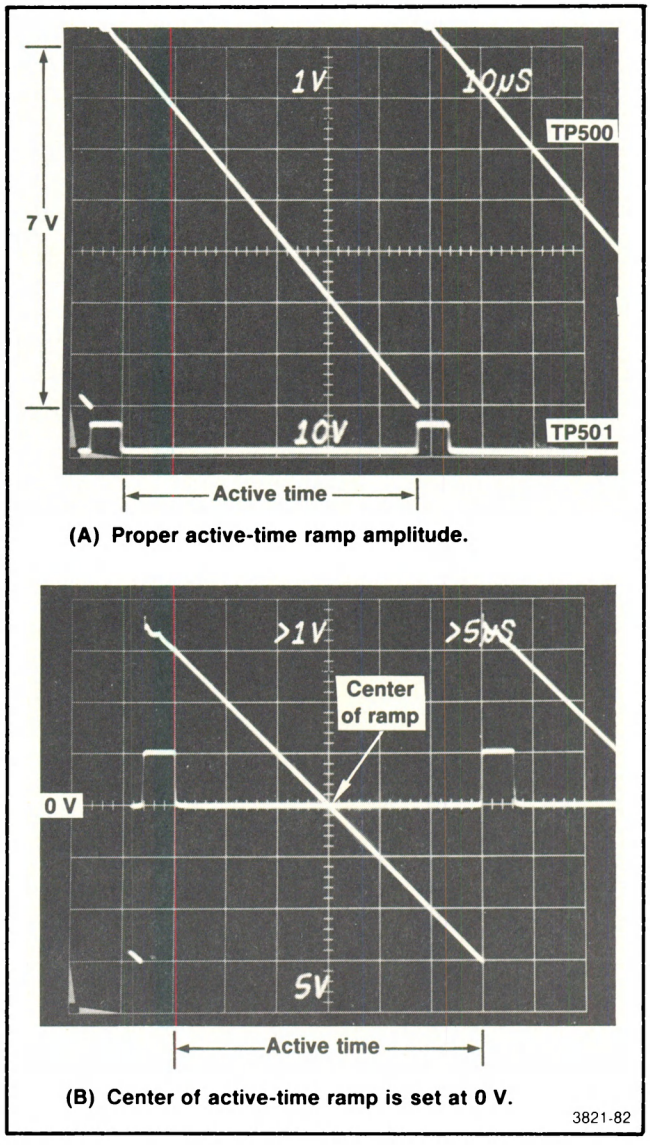

Fig. 7-13. Proper active-time horizontal ramp waveforms.

NOTES

1. Be sure to set the 690SR POWER switch to OFF when extending or reinstalling an assembly in the 690SR mainframe.

2. Parts e and f of this step ensure that the horizontal ramp amplitude and dc level are correct for use as a source reference signal when performing the convergence generator adjustments that follow. Leave the H Size control (R925) at the setting described in part e until directed otherwise. Leave the jumper on pins 3 and 4 of J600 until step 19f has been completed.

g. Move the Ch 1 10X probe to TP611 on A8A2 and check that the 7 V ramp is the same as shown in Fig. 7-13 except of opposite polarity.

h. Move the Ch 1 10X probe to TP420 on A8A2.

i. Using one of the spare jumpers, place the jumper on the pins of J412 of A8A2.

j. Set the Ch 1 deflection factor to 50 mV/div (includes 10× attenuation of probe).

k. ADJUST—R500 (DC Offset) on A8A2 so the dc level of the active time is 0 V as shown in Fig. 7-14A.

l. Remove the jumper from J412. Place the jumper on the storage pins.

m. Set the test oscilloscope Ch 1 deflection factor to 2 V/div and move the Ch 1 10 probe to TP523 on A8A2.

n. ADJUST—R805 (DC Level) on A8A2 so that the horizontal parabola waveform just reaches 0 V at the start and end of active time. See Fig. 7-14B. Adjust R403 (X/Y Offset) on A8A2 so that the waveform is symmetrical. Readjust R805 and R403 as often as necessary for optimum waveshape.

o. Move the Ch 1 10X probe to TP420 on A8A2 and check that the horizontal parabola waveform is symmetrical as shown in Fig. 7-14C. If not, repeat parts m through o to obtain best waveshape.

p. Disconnect the Ch 1 10× probe from the test point.

q. Leave the Convergence Control board, A8A1, in the vertical position. Leave the Ch 2 probe connected to TP501 on A8A2.

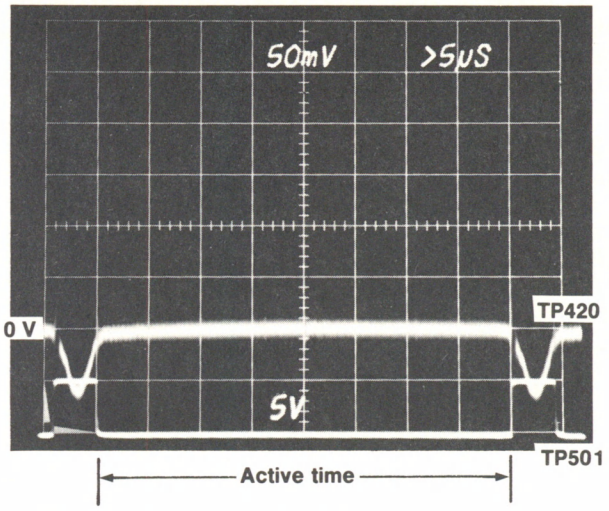

(A) Waveform at TP420 on A8A2 is set to 0 V during active-time interval. J412 is jumpered.

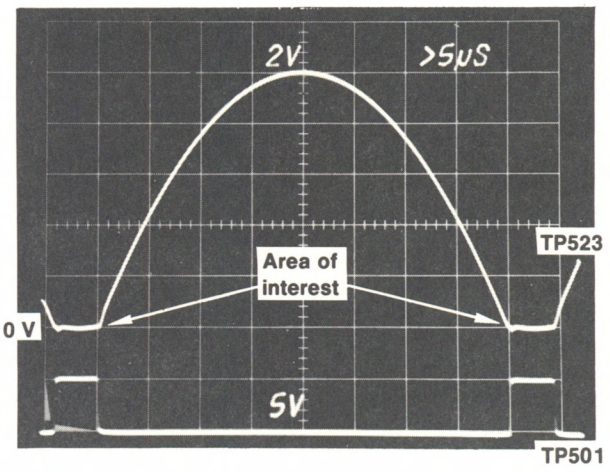

(B) Proper horizontal parabola waveform at TP523.

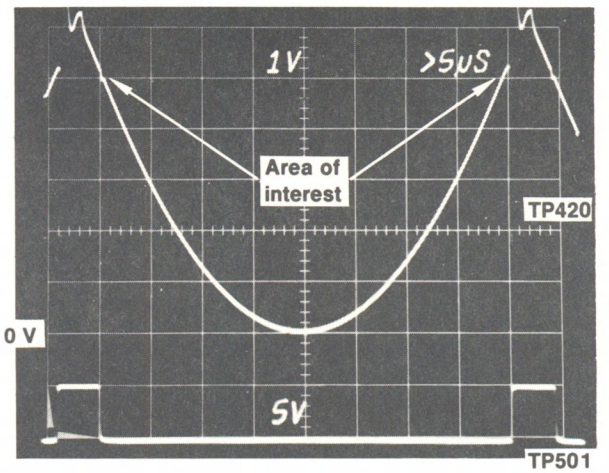

(C) Proper horizontal parabola waveform at TP420.

3821-83

Fig. 7-14. Typical waveforms obtained when performing step 13.

14. Adjust Y Offset (R624), DC Offset (R723), and X Offset (R625)

NOTE

The waveforms at TP500, TP523, and TP420 on A8A2 must be correct before proceeding with steps 14 through 16. Figs. 7-13, 7-14B, and 7-14C show the correct waveforms.

a. Use the same equipment setup conditions as shown in Fig. 7-7 except none of the 690SR assemblies are extended. Check that the Convergence Control board, A8A1, is opened to its vertical position and the Secondary Convergence switch (S626) on A8A1 is set to the Off position.

b. Check that the test oscilloscope Ch 2 10× probe is connected to TP501 on the Convergence Generator board, A8A2.

c. Use a spare jumper to install on J735 of A8A2. Check that pins 3 and 4 of J600 are jumpered.

d. Connect the Ch 1 10× probe to TP635 on A8A2. Set the Ch 1 deflection factor to 50 mV/div.

e. ADJUST—R624 (Y Offset) on A8A2 to obtain minimum signal amplitude during the active-time interval. See Fig. 7-15A.

f. Leave the jumper on J735. Connect another jumper to J634 on A8A2.

g. ADJUST—R723 (DC Offset) on A8A2 so the waveform dc level is 0 V during the active-time interval.

h. Remove the jumper from J735. Leave the other jumper on J634.

i. ADJUST—R625 (X Offset) on A8A2 for minimum signal amplitude during the active-time interval as shown in Fig. 7-15B.

j. Remove the jumper from J634 and install it on the storage pins. Set the test oscilloscope Ch 1 deflection factor to 2 V/div.

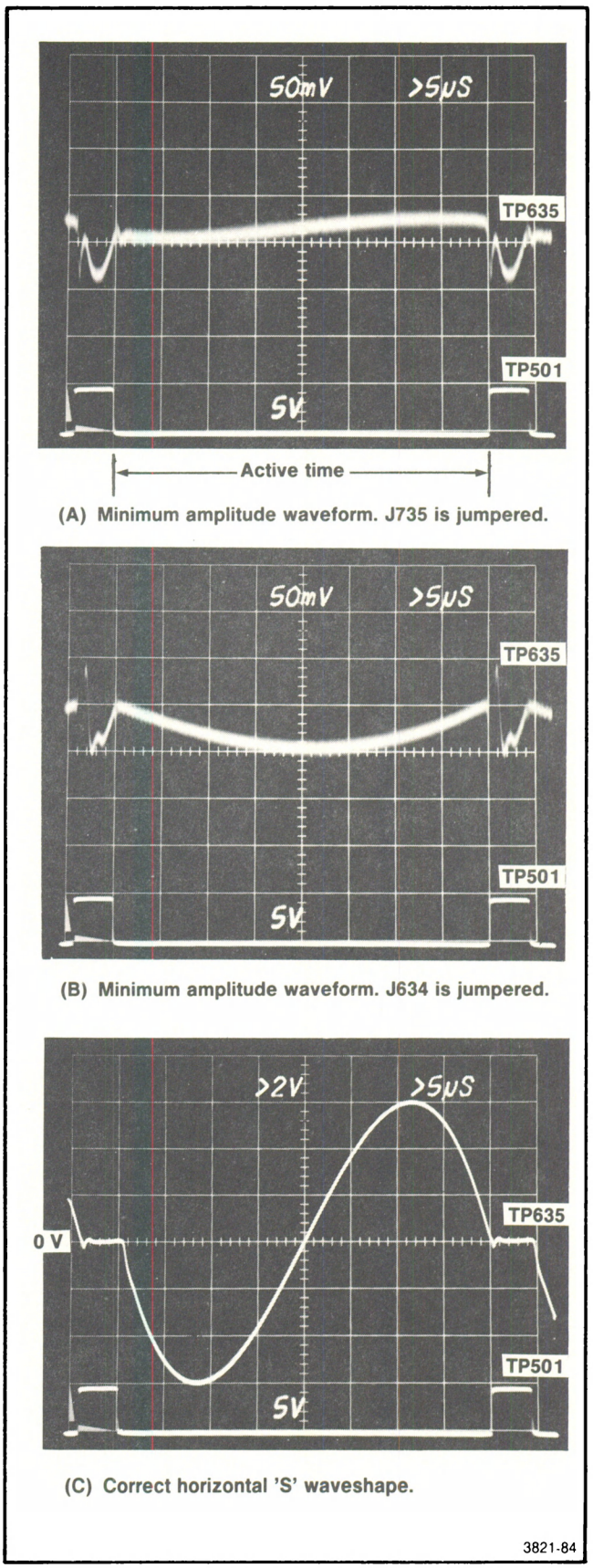

Fig. 7-15. Typical waveforms obtained at TP635 on A8A2 when performing step 14.

k. CHECK—the Ch 1 waveform for proper 'S' waveshape as shown in Fig. 7-15C. The waveform should start and end at the 0 V dc level coincident with the start and end of the active-time interval. The plus and minus amplitudes should be equal. Use the test oscilloscope Ch 1 Variable Volts/Div control to adjust the waveform amplitude so the graticule lines can be used as an aid. The center of the waveform should cross 0 V. If necessary, readjust R624 and R625 on A8A2 slightly to obtain best horizontal 'S'waveshape.

l. Connect the test oscilloscope Ch 1 10X probe to TP441 on A8A2 and check that the horizontal 'S' waveform is the same as Fig. 7-19C except of opposite polarity.

m. Leave Ch 2 probe connected to TP501 on A8A2. Leave the Convergence Control board, A8A1, in the vertical position.

15. Adjust Y Offset (R521), DC Offset (R524), and X Offset (R425)

a. Use the same equipment setup conditions as shown in Fig. 7-7 except none of the 690SR assemblies are extended. Check that the Secondary Convergence switch (S626) on A8A1 is set to the Off position.

b. Continuing from step 14, check that the Convergence Control board, A8A1, is opened to its vertical position and the test oscilloscope Ch 2 10X probe is connected to TP501 on A8A2. Check that the Ch 2 deflection factor is 5 V/div.

c. Connect a spare jumper connector to the pins of J635 on A8A2. Check that pins 3 and 4 of J600 are jumpered.

d. Connect the test oscilloscope Ch 1 10X probe to TP434 on A8A2 and set the deflection factor to 50 mV/div.

e. ADJUST—R521 (Y Offset) on A8A2 for minimum signal amplitude during the active-time interval.

f. Leave the jumper on J635. Connect another jumper to J425 on A8A2.

g. ADJUST—R524 (DC Offset) on A8A2 so the waveform dc level is 0 V during the active-time interval.

h. Remove the jumper from J635. Leave the other jumper on J425.

i. ADJUST—R425 (X Offset) on A8A2 for minimum signal amplitude during the active-time interval. Figure 7-16A shows a typical waveform.

j. Remove the jumper from J425 and install it on the storage pins. Set the test oscilloscope Ch 1 deflection factor to 1 V/div and rotate the Ch 1 Variable/Volts control so the waveform is 5 divisions in amplitude.

k. CHECK—the Ch 1 waveform for proper 'B' waveshape as shown in Fig. 7-16B. The waveform starting and ending dc levels should be at 0 V and are affected by the setting of R521. The center of the waveform should also be at 0 V and is affected by R425. Readjust, as necessary, for optimum horizontal 'B' waveshape.

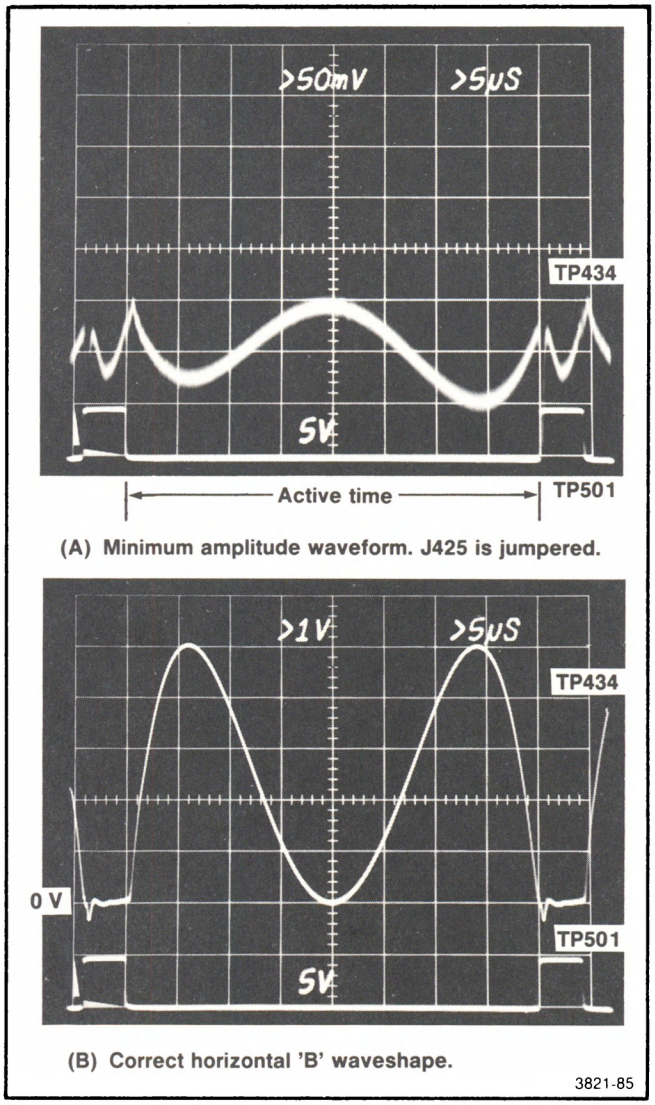

Fig. 7-16. Typical waveforms obtained at TP434 on A8A2 when performing step 15.

l. Connect the Ch 1 10X probe to TP345 on A8A2 and check that the horizontal 'B' waveform is the same as Fig. 7-16B except of opposite polarity.

m. Disconnect the 10X probe from the test points. Leave the Convergence Control board, A8A1, in the vertical position.

16. Adjust DC Offset (R302), X/Y Offset (R300), and DC Level (R220)

a. Fig. 7-17 shows the equipment setup conditions and lists the control settings.

b. Continuing from step 15, check that the Convergence Control board, A8A1, is opened to the vertical position and the Secondary Convergence switch (S626) on A8A1 is set to the Off position. Check that pins 3 and 4 of J600 on A8A2 are jumpered.

c. Connect the test oscilloscope Ch 1 10X probe to TP101 on A8A2. Rotate the Variable Time/Div control so the linear portion of the vertical ramp occupies 8 horizontal divisions. Use Fig. 7-10 as a guide.

d. Set the Vertical Size control (R825) on A8A1 so the linear portion of the vertical ramp is 7 V peak-to-peak in amplitude.

e. Using Fig. 7-10 as a guide, set the test oscilloscope controls to check that the center of the linear portion of the vertical ramp is 0 V. If necessary, adjust the Vertical Position control (R820) on A8A1 so the center of the ramp is at 0 V.

f. Connect a spare jumper connector to the pins of J320 on A8A2.

g. Move the test oscilloscope Ch 1 10X probe to TP320 and set the Ch 1 deflection factor to 50 mV/div.

h. ADJUST—R302 (DC Offset) on A8A2 so the trace dc level is 0 V.

i. Remove the jumper from J320. Place the jumper on the storage pins.

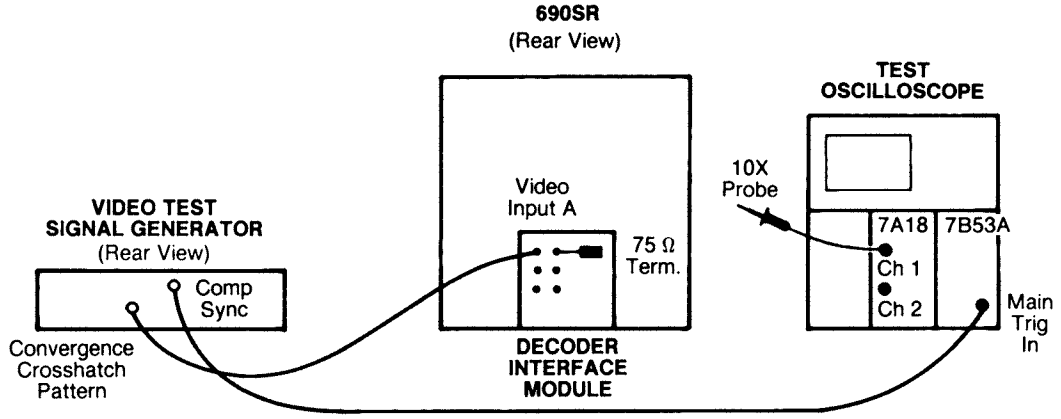

VIDEO TEST SIGNAL GENERATOR
Set controls to generate a full field convergence crosshatch pattern.

690SR

POWER	ON
BLACK LEVEL	PRESET
CONTRAST	PRESET

DECODER INTERFACE MODULE

All variable controls set to Preset and all pushbuttons set to the Out position.

For NTSC decoder module (if used), Matrix switch is set to the Out position.

TEST OSCILLOSCOPE

Ch 1 Input Coupling	DC
Ch 1 Deflection Factor	1 V/Div
Display Mode	Ch 1
Triggering switches	—Ext, Auto, AC LF Rej
Triggering Level*	Fully cw
Magnifier	X1
Sweep Rate	2 ms/div

*Set to trigger on vertical-rate signal.

3821-86

Fig. 7-17. Equipment setup conditions for adjusting the convergence waveforms.

j. Set the test oscilloscope Ch 1 deflection factor to 1 V/div.

k. ADJUST—R300 (X/Y Offset) on A8A2 for best vertical parabola symmetry at the top of the waveform. Figure 7-18A shows a typical waveform.

l. Move the test oscilloscope Ch 1 10X probe to TP229 on A8A2 and set the Ch 1 deflection factor to 2 V/div.

m. ADJUST—R220 (DC Level) on A8A2 until the right corner of the inverted parabola waveform just reaches the 0 V dc level. If necessary, readjust R300 and R220 until the bottom ends of the parabola waveform just reach the 0 V dc level at the beginning and end of the active-time as shown in Fig. 7-18B.

n. Disconnect the 10X probe from TP229. Leave the Convergence Control board, A8A1, in the vertical position.

17. Adjust Y Offset (R324), DC Offset (R322), and X Offset (R328)

NOTE

The waveforms at TP101, TP320, and TP229 on A8A2 (see Figs. 7-10 and 7-18) must be correct before proceeding with steps 17 and 18. Leave the Vertical Size and Position controls (R825 and R820) on A8A1 at the settings described in parts d and e of step 16 until directed otherwise.

a. Use the same equipment setup conditions and control settings as shown in Fig. 7-17. Check that the Convergence Control board, A8A1, is opened to its vertical position and the Secondary Convergence switch (S626) on A8A1 is set to the Off position.

b. Connect a spare jumper to the pins of J335 on A8A2. Check that pins 3 and 4 of J600 are jumpered.

c. Connect the test oscilloscope Ch 1 10X probe to TP235 on A8A2. Set the Ch 1 deflection factor to 50 mV/div.

d. ADJUST—R324 (Y Offset) on A8A2 for minimum signal amplitude.

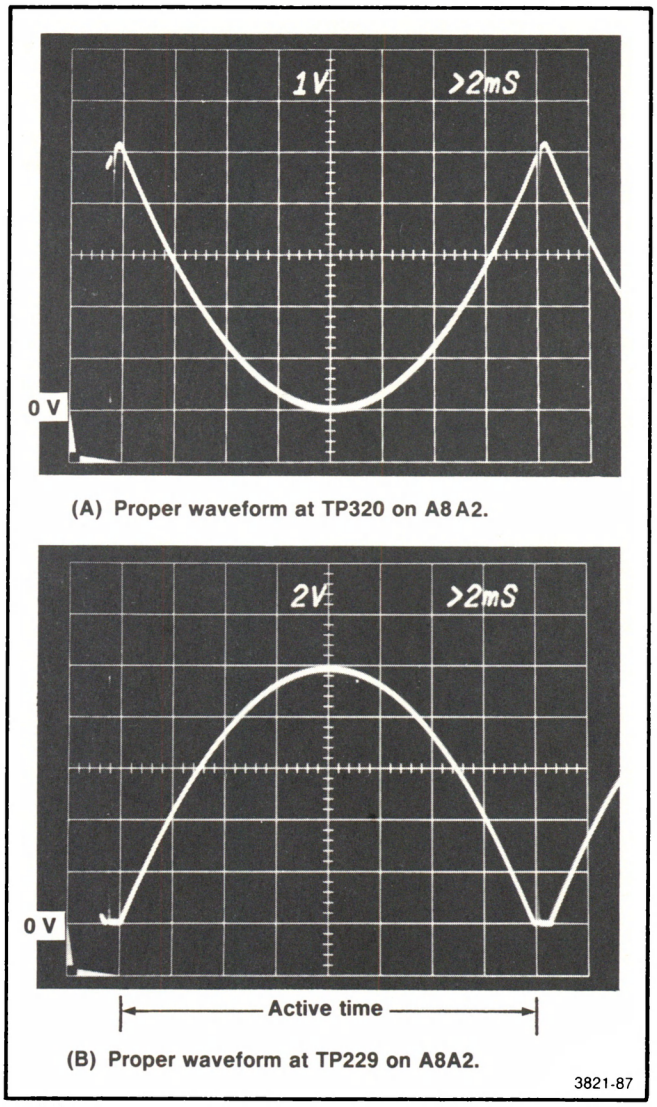

Fig. 7-18. Typical vertical parabola waveforms.

e. Leave the jumper on J335. Connect another jumper to J235 on A8A2.

f. ADJUST—R322 (DC Offset) on A8A2 so the dc level of the trace is 0 V.

g. Remove the jumper from J335. Leave the other jumper on J235.

h. ADJUST—R328 (X Offset) on A8A2 for minimum signal amplitude.

i. Remove the jumper from J235 and install it on the storage pins. Set the test oscilloscope Ch 1 deflection factor

to 1 V/div. Use the Ch 1 Variable Volts/Div control for adjusting the waveform amplitude. See Fig. 7-19.

j. CHECK—for proper vertical 'S' waveform as shown in Fig. 7-19. If necessary, readjust R328 to make the start and end of the 'S' waveform coincide with 0 V. Readjust R324 so the plus and minus amplitudes are equal.

k. Connect the test oscilloscope Ch 1 10X probe to TP243 on A8A2 and check that the vertical 'S' waveform is the same as shown in Fig. 7-19 except of opposite polarity.

l. Disconnect the Ch 1 10X probe from TP243. Leave the Convergence Control board, A8A1, in the vertical position.

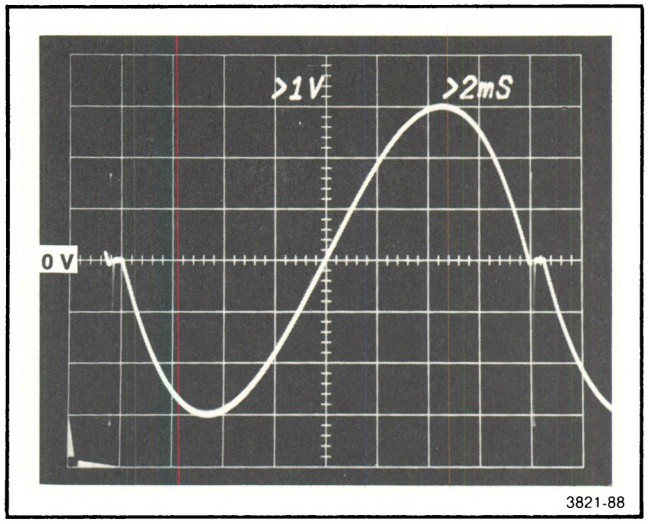

Fig. 7-19. Proper vertical 'S' waveform at TP235 on A8A2.

18. Adjust X Offset (R111), DC Offset (R119), and Y Offset (R101)

a. Use the same equipment setup conditions and control settings as shown in Fig. 7-17. Check that the Convergence Control board, A8A1, is opened to its vertical position and the Secondary Convergence switch (S626) on A8A1 is set to the Off position.

b. Connect a spare jumper connector to the pins of J117 on A8A2. Check that pins 3 and 4 of J600 on A8A2 are jumpered.

c. Connect the test oscilloscope Ch 1 10X probe to TP137 on A8A2. Set the Ch 1 deflection factor to 50 mV/div.

d. ADJUST—R111 (X Offset) on A8A2 for minimum signal amplitude.

e. Leave the jumper on J117. Connect another jumper to J130 on A8A2.

f. ADJUST—R119 (DC Offset) on A8A2 so the trace dc level is 0 V.

g. Remove the jumper from J117. Leave the other jumper connected to J130.

h. ADJUST—R101 (Y Offset) on A8A2 for minimum signal amplitude.

i. Remove the jumper from J130 and install it on the storage pins. Set the test oscilloscope Ch 1 deflection factor to 500 mV/div. Use the Ch 1 Variable Volts/Div control for adjusting the waveform amplitude. See Fig. 7-20.

j. CHECK—for proper vertical 'B' waveshape as shown in Fig. 7-20. If necessary, readjust R111 to make the center of the 'B' waveform coincide with 0 V. Readjust R101 so the start and end of the 'B' waveshape also coincides with 0 V.

k. Connect the test oscilloscope Ch 1 10X probe to TP141 on A8A2. Check that the vertical 'B' waveform is the same as Fig. 7-20, except of opposite polarity.

l. Disconnect the Ch 1 10X probe from TP141. Leave the Convergence Control board, A8A1, in the vertical position.

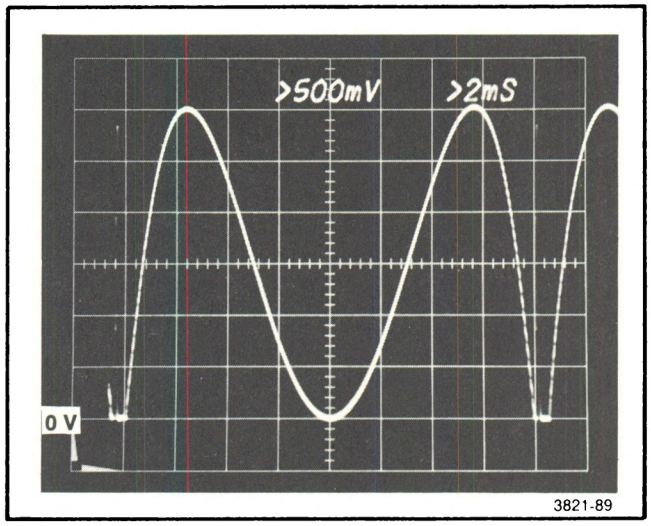

Fig. 7-20. Proper vertical 'B' waveform at TP137 on A8A2.

19. Adjust Y Offset (R142), X Offset (R242), and DC Offset (R250)

a. Use the same equipment setup conditions and control settings as shown in Fig. 7-17. Check that the Convergence Control board, A8A1, is opened to its vertical position and the Secondary Convergence switch (S626) on A8A1 is set to the Off position. Check that pins 3 and 4 of J600 on A8A2 are jumpered.

b. Connect the test oscilloscope Ch 1 10X probe to TP161 on A8A2. Check that the Ch 1 deflection factor is set to 1 V/div.

c. ADJUST—R142 (Y Offset) and R242 (X Offset) for optimum flat bottom as shown in Fig. 7-21A. Adjust R250 (DC Offset) so the bottom of the waveform coincides with 0 V.

d. Set the test oscilloscope Time/Div switch to 10 μs, and set the Triggering Level control to obtain a stable display.

e. CHECK—the horizontal-rate waveform for a flat bottom that coincides with 0 V as shown in Fig. 7-21B. If necessary, repeat part c of this step.

f. Disconnect the 10X probe from TP161. Remove the jumper from pins 3 and 4 of J600. Return the jumper to the storage pins.

g. Lower the Convergence Control board, A8A1, to its horizontal position and install the screws that were removed in step 13b. Reconnect P827 to J827.

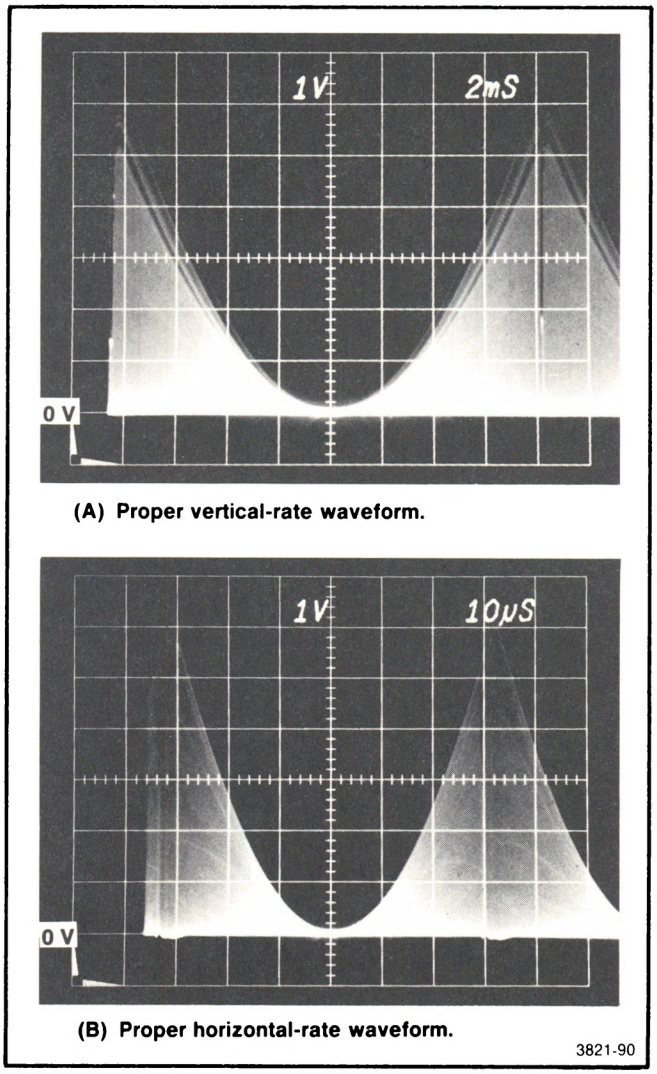

Fig. 7-21. Typical waveforms obtained at TP161 on A8A2.

CONVERGENCE CONTROL A8A1, RASTER CONTROL A9A1 VERTICAL DEFLECTION A10A1 HORIZONTAL DEFLECTION A11A1 HORIZONTAL DELAY STABILIZER A11A2

20. Adjust Horiz Raster Centering (R149), Horiz Size Cal (R620), and Horiz Lin (R144). Select 'S' Caps.

a. Use the same equipment setup conditions as shown in Fig. 7-17, except that the test oscilloscope is not used. Check that the Secondary Convergence switch (S626) on A8A1 is set to the Off Position.

b. Set the White Pedestal switch, S720, on A8A1 to the On position. Rotate the H Size control (R925) on A8A1 so the left and right sides of the raster are visible. See Fig. 7-22A.

c. Rotate the H Position control (R920) on A8A1 so that the convergence crosshatch pattern is horizontally centered within the raster area as shown in Fig. 7-22A. Leave the H Position control at this setting until completing step 24. Set the White Pedestal switch, S720, on A8A1 to the Normal position.

d. Mount the linearity graticule directly to the front of the 690SR bezel. Check that the graticule is centered. Use the corner markings on the graticule as a guide for proper alignment. Figure 7-22B shows the linearity graticule in use.

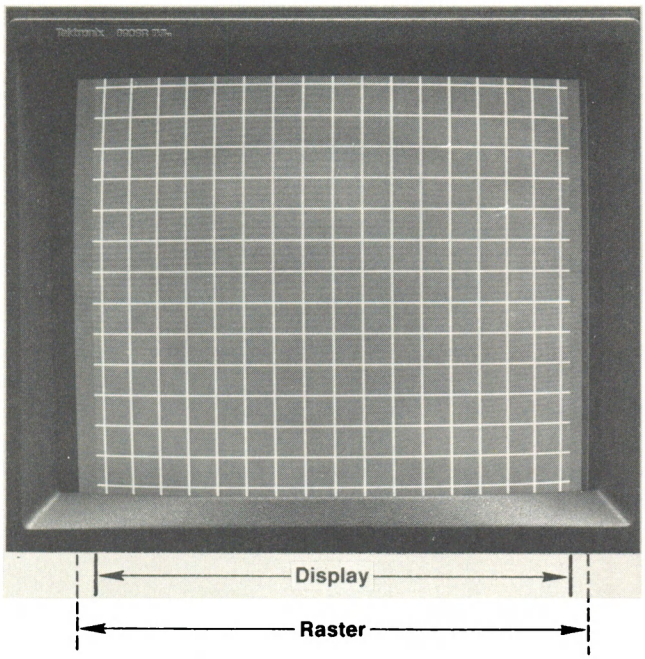

(A) Horizontally centering the display within the raster area.

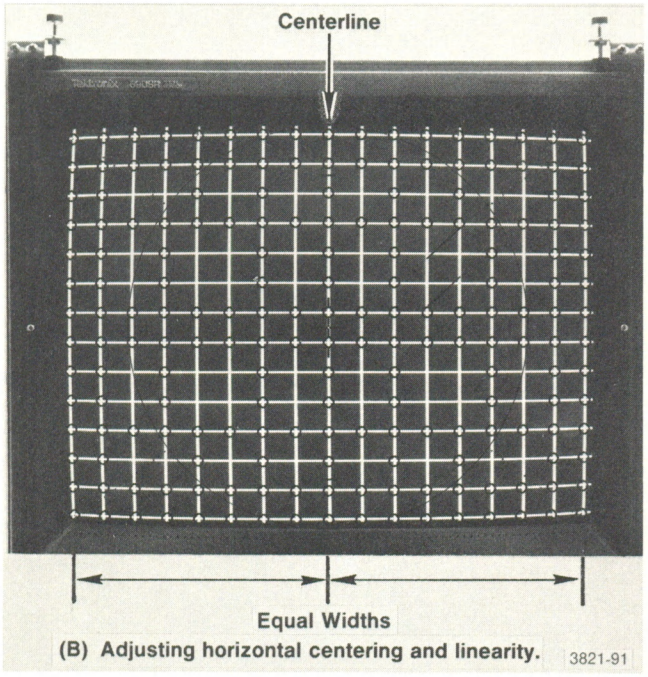

Fig. 7-22. Centering the convergence crosshatch pattern and adjusting for optimum horizontal linearity.

e. Position a high-intensity light source 30 inches away from the center of the linearity graticule. Carefully check that the light source is properly centered with respect to the center of the crt face-plate. If necessary, reposition the linearity graticule so the edges of the small circles that are projected by the light source coincide with the left and right edges of the bezel.

f. Set the video test signal generator convergence Vertical and Horizontal Position controls so that the crosshatch pattern is properly centered.

g. Turn the H Size control (R925) on A8A1 fully clockwise. Set the Secondary Convergence switch (S626) to the Off position.

h. ADJUST—R149 (Horiz Raster Centering) on A11A1 so that the center vertical crosshatch line is centered within the small circles located at the vertical center of the linearity graticule as shown in Fig. 7-22B.

Adjust R620 (Horiz Size Cal) on A11A1 to obtain a full size display; that is, the left and right vertical crosshatch lines should be centered within the projected linearity graticule small circles located adjacent to the left and right edges of the bezel.

Adjust R144 (Horiz Lin) on A11A1 so that the left half of the display is the same as the right half as shown in Fig. 7-22B.

Linearity error is ±1% within the circle bounded by picture height and ±1.5% outside the circle.

i. SELECT 'S' CAPS—If linearity needs to be improved within the center to outside edge areas, set the 690SR POWER switch to OFF and extend the horizontal deflection assembly A11. The 'S' Caps are located on the Horizontal Delay Stabilizer board, A11A2, and are selected by moving the 'S' Capacitor Select jumpers for J205 and J105 only.

First, check that the jumper for J505 is positioned on pins 1 through 6 and the jumper for J405 is positioned on pins 1 through 4. Leave the jumpers for J505 and J405 at these positions for television mode of operation.

Next, move the jumpers for J205 or the jumper for J105 while the 690SR POWER switch is set to OFF. (Do not move the jumpers while the POWER switch is set to ON.) The jumpers for J205 can be set to any combination except as follows: Do not jumper 1 & 5 together, 2 & 6, or 4 & 8. After moving the desired jumper, set the 690SR POWER switch to ON and recheck horizontal linearity.

j. INTERACTION—Repeat parts h and i as often as necessary to obtain optimum centering and linearity within the requirement given in part h of this step.

k. If the horizontal deflection assembly was mounted on the rigid module extender card, set the 690SR POWER switch to OFF. Remove the extender and install the horizontal deflection assembly in the mainframe.

l. Leave the linearity graticule mounted on the bezel and the light source on.

RASTER CONTROL A9A1
CONVERGENCE CONTROL A8A1
HORIZONTAL DEFLECTION A11

21. Adjust H Size (R925), H Lin Match (R432), and Horiz Size Cal (R620)

a. Use the same equipment setup conditions as shown in Fig. 7-7 except extend the raster control assembly, A9, while the 690SR POWER switch is set to OFF. After extending the assembly, set the POWER switch to ON. Check that the Secondary Convergence switch (S626) on A8A1 is set to the Off position.

b. Connect the Ch 1 and Ch 2 10× probes from the 7A18 Dual-Trace plug-in unit to test points TP474 and TP473, respectively, on A8A1.

c. PRESET—R432 (H Lin Match) on A9A1 to midrange.

d. Note that the display is full size horizontally; that is, the convergence crosshatch pattern matches the width of the linearity graticule projected on the crt.

e. PRESET—the H Size control (R925) on A8A1 so the active portion of the ramp is 6.00 V peak-to-peak in amplitude for use with the 14 × 17 line linearity graticule. For the 15 × 20 line linearity graticule, the ramp should be 6.32 V peak-to-peak in amplitude as displayed on the test oscilloscope crt.

f. ADJUST—R620 (Horiz Size Cal) on A11A1 until the crosshatch pattern is 12/16 full-size horizontally when using the 14 × 17 linearity graticule. (Since the linearity graticule is 16 divisions wide, the crosshatch pattern should be 12 linearity graticule divisions wide when R620 is properly adjusted.) The H Position control (R920) on A8A1 can be used to align the crosshatch pattern with the linearity graticule.

When using the 15 × 20 linearity graticule, the convergence crosshatch pattern should be 15/19 full size; that is, the pattern should be 15 linearity graticule divisions wide when R620 is properly adjusted.

g. ADJUST—Rotate the H Size control (R925) on A8A1 fully clockwise. (Active-time portion of the ramp should be 8 V peak-to-peak in amplitude as displayed on the test oscilloscope crt.)

h. ADJUST—R432 (H Line Match) on A9A1 to obtain a full size display horizontally as noted in part d of this step.

i. INTERACTION—Repeat parts e through h until no more readjustment is necessary.

j. Set the 690SR POWER switch to OFF. Remove the rigid module extender card and install the raster control assembly in the mainframe. Set the POWER switch to ON.

k. Disconnect the 10× probes from the test points. Turn off the light source.

CONVERGENCE CONTROL A8A1
VERTICAL DEFLECTION A10A1
RASTER CONTROL A9A1

22. Adjust Vertical Size (R825), Vertical Position (R820), Vert Raster Centering (R551), Vert Size Cal (R553), Vert Lin Bal (R855), and Vertical Linearity (R651)

a. Use the same equipment setup conditions and control settings as given in Fig. 7-17. Check that the Secondary Convergence switch (S626) on A8A1 is set to the Off position.

b. Connect the test oscilloscope Ch 1 10× probe to TP675 on A8A1 (TP675 is located under the P470 ribbon cable on earlier instruments). Rotate the Variable Time/Div control so the linear portion of the vertical ramp occupies 8 horizontal divisions as shown in Fig. 7-10.

c. ADJUST—Turn the Vertical Size control (R825) on A8A1 fully clockwise. The linear portion of the vertical ramp should be 7.6 V peak-to-peak in amplitude as set by R827 on A8A1 in step 10. See Fig. 7-10.

NOTE

Leave the Vertical Size control (R825) at this setting for the steps that follow.

d. Using Fig. 7-10 as a guide, set the test oscilloscope controls to check that the center of the linear portion of the vertical ramp is 0 V.

e. ADJUST—the Vertical Position control (R820) on A8A1 so the center of the linear ramp is 0 V.

NOTE

In the steps that follow, do not readjust the Vertical Position control (R820). Instead, use the Vert Raster Centering adjustment (R551).

f. Turn on the light source for the linearity graticule. Check that the light source is properly positioned as described in part e of step 20.

g. ADJUST—R551 (Vert Raster Centering) on A10A1 so that the center two convergence pattern lines are centered within the small circles of the linearity graticule. See Fig. 7-22B. Adjust R553 (Vert Size Cal) on A10A1 to obtain a full-size display; that is, the top and bottom horizontal convergence lines should be centered within the small circles of the linearity graticule. Readjust R551 and R553, as necessary, to achieve a properly centered full size display.

h. ADJUST—R855 (Vert Lin Bal) on A9A1 so the top half of the display is the same height as the bottom half of the display. Readjust R551 (Vert Raster Centering) on A10A1 so the crosshatch pattern is centered vertically. Adjust R651 (Vert Lin) on A9A1 to obtain optimum linearity; that is, the top and bottom areas versus the center.

i. INTERACTION—If necessary, repeat parts g and h of this step.

j. Disconnect the Ch 1 10× probe from TP675. Leave the light source turned on and the linearity graticule mounted on the bezel.

23. Adjust Side Pin/Tilt Gain (R755), Side Tilt (R652), T & B Pin Gain (R351), T & B Pin Balance (R454), T & B Tilt (R630), and T & B 'S' (R633)

a. Use the same equipment setup conditions and control settings as given in Fig. 7-17 except the test oscilloscope is not used. Check that the Secondary Convergence switch (S626) on A8A1 is set to the Off position.

b. ADJUST—R755 (Side Pin/Tilt Gain) and R652 (Side Tilt) on A9A1 so the left and right sides of the display are straight.

c. ADJUST—R351 (T & B Pin Gain), R454 (T & B Pin Balance), R630 (T & B Tilt), and R633 (T & B 'S') for a straight horizontal line on the top and bottom of the display. Resistors R351 and R454 are located on A9A1; R630 and R633 are located on A8A1.

d. READJUST—R553 (Vert Size Cal) on A10A1, if necessary, to obtain a full-size display vertically. Repeat parts a through d as necessary for optimum results. Linearity error is ±1% within the circle bounded by picture height and ±1.5% outside the circle.

e. Turn off the light source and remove the linearity graticule from the front of the 690SR bezel.

24. Adjust Dynamic Focus Gain (R554), H Focus Cal (R324), and V Focus Cal (R640)

a. Continuing from step 23, set the 690SR POWER switch to OFF and extend the raster control assembly A9. Set the POWER switch to ON. Check that the Secondary Convergence switch (S626) on A8A1 is set to the Off position.

b. Connect a 10× probe from Ch 1 of the 7A18 Dual-Trace plug-in to TP851 on A9A1. Set the test oscilloscope controls as follows:

Ch 1 Deflection Factor	2 V/div
Display Mode	Ch 1
Sweep Rate	20 μs/div

NOTE

Be sure that the horizontal and vertical ramps are the correct amplitude before performing part c of this step. The ramps were set in steps 21 and 22.

c. ADJUST—R554 (Dynamic Focus Gain) on the Raster Control board A9A1 to midrange. Adjust R324 (H Focus Cal) on A9A1 for a 12 V peak-to-peak horizontal focus waveform amplitude as shown in Fig. 7-23.

Adjust R640 (V Focus Cal) on A9A1 for a 5 V peak-to-peak vertical focus waveform amplitude. See Fig. 7-23. Adjust R554 (Dynamic Focus) on A9A1 for best overall focus of the convergence crosshatch pattern displayed on the 690SR crt.

NOTE

The Dynamic Focus adjustment, R554, on A9A1 can be readjusted anytime after completing this Adjustment Procedure.

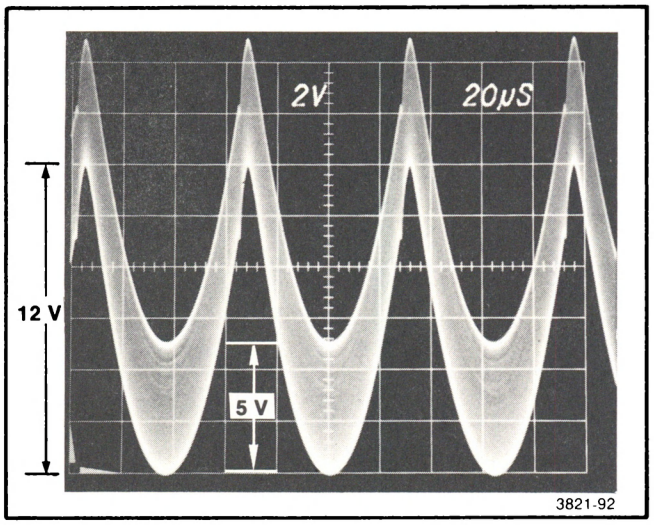

Fig. 7-23. Proper H and V focus waveform amplitudes at TP851 on A9A1.

d. Disconnect the 10× probe from TP851.

e. Set the 690SR POWER switch to OFF and reinstall the raster control assembly in the mainframe. Set the POWER switch to ON.

25. Adjust Primary and Secondary Convergence

a. Use the same equipment conditions and control settings as shown in Fig. 7-14 except the test oscilloscope is not needed. Check that the Secondary Convergence switch (S626) on A8A1 is set to the Off position.

b. Depress the DEGAUSS push button for at least 5 seconds.

c. Check that the H Size (R925) and Vert Size (R825) controls on A8A1 are set fully clockwise.

d. ADJUST—the Primary Convergence controls on A8A1 by following the numbered sequence given in Fig. 7-11. Adjust the controls for best convergence.

e. Set the Secondary Convergence switch (S626) to the On position. Rotate the Secondary Convergence 'S' adjustment (R435) on A8A1 either fully clockwise or counterclockwise.

f. ADJUST—R635 (Conv Delay) on A8A1 so the crossover point is positioned in the center of the screen.

g. Return the Secondary Convergence 'S' adjustment (R435) to its optimum converged setting.

h. Set the Static Convergence switch (S620) to Cal and the Secondary Convergence switch (S626) to Off. Both switches are located on A8A1.

i. ADJUST—If necessary, adjust the static convergence adjustments located on the neck of the crt. See Fig. 7-12.

j. Set the Static Convergence switch (S620) on A8A1 to the Normal position.

k. ADJUST—the Primary Convergence controls on A8A1 for best convergence by following the numbered sequence illustrated in Fig. 7-11. Also, refer to the CONVERGENCE TOUCHUP procedure on page 2-4 in Section 2 for more details.

l. Set the Secondary Convergence switch (S626) on A8A1 to On.

m. ADJUST—the Secondary Convergence controls on A8A1 for optimum convergence. If necessary, readjust the Primary Convergence controls on A8A1 to optimize distribution of convergence errors. Maximum allowed misconvergence is 0.5 mm when measured from the center of one displayed signal to the center of the same signal displayed in another color.

VIDEO AMPLIFIER A13A1 CONVERGENCE CONTROL A8A1

26. Adjust +12 V Cal (R119)

NOTE

Before starting the video amplifier adjustment procedure, check that the yoke leads are positioned away from the crt socket to minimize crosstalk. Excessive crosstalk can change the black level.

a. Use Fig. 7-2 as a guide for the setup conditions, except as follows:

Touch the digital multimeter test prod to the −12 V test point on A13A1.

b. Note the digital multimeter reading.

c. Move the digital multimeter test prod to the +12 V test point on A13A1.

d. ADJUST—R119 (+12 V Cal) on A13A1 so the digital multimeter reading is the same as the reading noted in part b of this step, except that it will be opposite polarity.

e. Disconnect the test prod from the test point.

27. Preadjust Black Level Preset (R905) and Input DC Bal (R525, R125)

NOTE

Final adjustment of R905, R525, and R125 is performed in step 32.

a. Refer to Fig. 7-24 for the equipment setup conditions and control settings. Note that the video amplifier assembly, A13, is opened to its horizontal position for access to the adjustments and test points. If the NTSC decoder interface module is used, check that the Matrix switch is set to the Out position.

b. Preset the following adjustments on A8A1 to the center of their range:

Red White-Balance	R701
Green White-Balance	R705
Blue White-Balance	R711
Red Black-Balance	R801
Green Black-Balance	R805
Blue Black-Balance	R811
Black Level Preset	R905
Contrast Preset	R911

c. Connect the test oscilloscope Ch 1 10× probe to the green amplifier test point, TP352, on A13A1.

d. ADJUST—R905 (Black Level Preset) on A8A1 so that the video black level matches the black level sample as shown in Fig. 7-25. Disregard the amplitude of the waveform.

e. Move the test oscilloscope Ch 1 10X probe to the red amplifier test point, TP552, on A13A1.

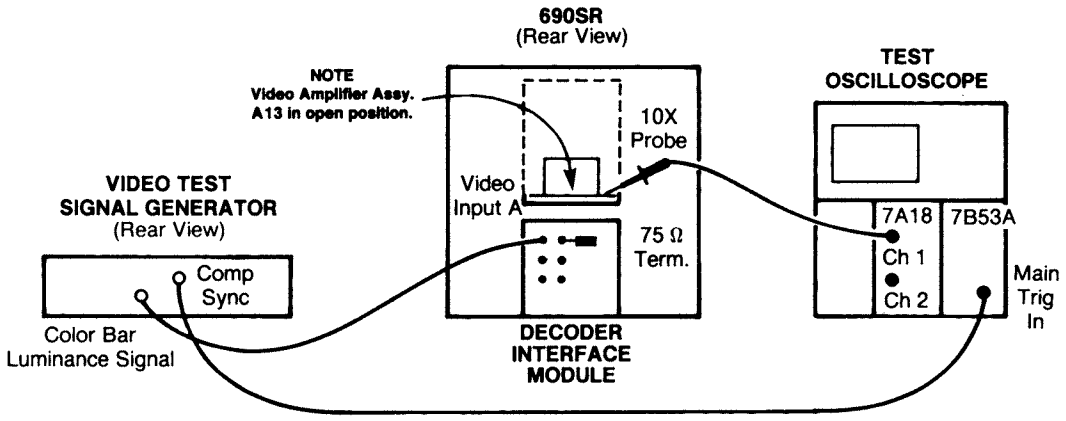

VIDEO TEST SIGNAL GENERATOR

Set controls to generate a 75% amplitude full field color bar luminance signal with a 100% white bar.

For NTSC standard: Use 7.5% setup.
For 50 Hz PAL or SECAM: Use 0% setup.

690SR

POWER	ON
BLACK LEVEL	PRESET
CONTRAST	PRESET

DECODER INTERFACE MODULE

All variable controls set to Preset and all pushbuttons set to the Out position.

For NTSC decoder module (if used), Matrix switch is set to the Out position.

TEST OSCILLOSCOPE

Ch 1 Input Coupling	DC
Ch 1 Deflection Factor	50 mV/div
Display Mode	Ch 1
Triggering switches	—Ext, Auto, AC LF Rej
Triggering Level*	1/3 cw
Magnifier	X1
Sweep Rate	10 μs/div

*Set to trigger on horizontal-rate signal.

3821-93

Fig. 7-24. Equipment setup conditions for performing the Z-axis adjustments.

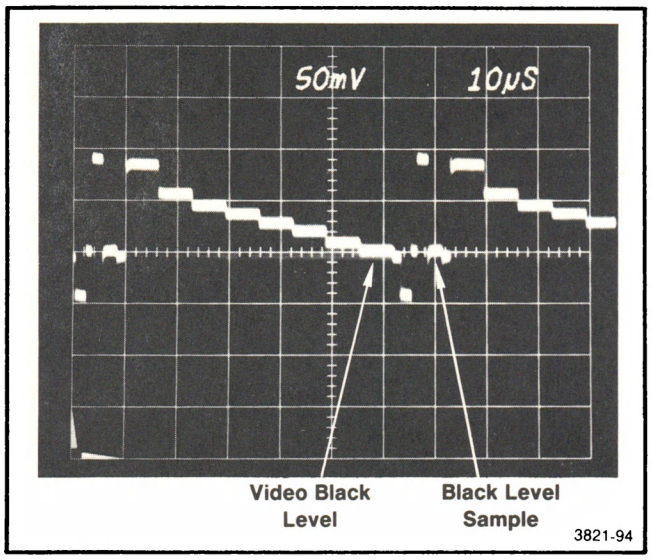

Fig. 7-25. Matching the video black level to the black level sample interval at TP352 on A13A1.

f. ADJUST—R525 (Input DC Bal) on A13A1 so that the video black level matches the black level sample. Use Fig. 7-25 as a guide.

g. Move the test oscilloscope Ch 1 10X probe to the blue amplifier test point, TP142, on A13A1.

h. ADJUST—R125 (Input DC Bal) on A13A1 so that the video black level matches the black level sample.

i. Leave the Ch 1 10× probe connected to TP142.

28. Adjust Gain Cell Bal (R135, R335, R535)

a. Continuing from step 27i, check that the test oscilloscope Ch 1 10× probe is connected to TP142 on A13A1.

b. ADJUST—R135 (Gain Cell Bal) on A13A1 for minimum movement of the video black level and black level sample as the front-panel CONTRAST control is rotated back and forth. One method for making the adjustment is to set the CONTRAST control just out of the PRESET (detent) position and note the location of these levels with respect to a graticule reference line. Then, return the CONTRAST control to the PRESET position and adjust R135 so these levels match the location noted earlier. Repeat this procedure several times until these levels remain stationary as the CONTRAST control is varied.

c. Move the Ch 1 10× probe to TP352 on A13A1.

d. ADJUST—R335 (Gain Cell Bal) on A13A1 for no movement of the video black level and the black level sample as the CONTRAST control is varied.

e. Move the Ch 1 10× probe to TP552 on A13A1.

f. ADJUST—R535 (Gain Cell Bal) on A13A1 for no movement of the video black level and the black level sample as the CONTRAST control is varied.

g. Return the CONTRAST control to the PRESET positon. Disconnect the 10× probe from TP552.

29. Adjust Contrast Preset (R911)

a. Use the same equipment setup conditions and control settings as shown in Fig. 7-24 except set the test oscilloscope controls as follows:

Ch 1 Input Coupling	AC
Ch 1 Deflection Factor	200 mV/div

b. Connect the test oscilloscope Ch 1 10× probe to TP379 (Green) on A13A1.

c. Check that the (Red, Green, and Blue) White-Balance and Black-Balance adjustments on A8A1 are set to the center of their range.

d. ADJUST—R911 (Contrast Preset) on A8A1 for 0.9 V peak-to-peak video amplitude as shown in Fig. 7-26. Video amplitude is black level to white.

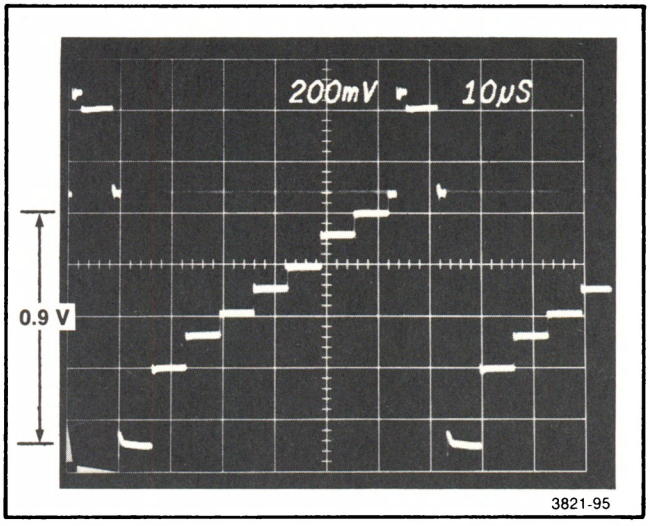

Fig. 7-26. Proper video amplitude at TP279 (Green) on A13A1.

e. Move the 10× probe to TP579 (Green) on A13A1 and check that the video amplitude of the waveform is approximately 1.1 V peak-to-peak.

f. Move the 10× probe to TP179 (Blue) on A13A1 and check that the video amplitude of the waveform is approximately 0.75 V peak-to-peak.

g. Disconnect the 10× probe from the test point.

CRT SOCKET A12
VIDEO AMPLIFIER A13A1
CONVERGENCE CONTROL A8A1

30. Adjust Red, Green, and Blue Output Amplifier Gain (R591, R391, R191)

a. Refer to Fig. 7-24 for equipment setup conditions and control settings except set the test oscilloscope controls as follows:

Ch 1 Input Coupling	AC
Ch 1 Deflection Factor	10 V/div

b. Connect the test oscilloscope Ch 1 10× probe to TP437 on A12. Connect the probe ground lead to TP425 on A12.

c. Check that the 690SR front-panel CONTRAST and BLACK LEVEL controls are set to PRESET.

d. Check that the Red, Green, and Blue White-Balance adjustments on A8A1 are centered.

e. ADJUST—R591 (Red Gain) on A13A1 so that the video amplitude is 35 V peak-to-peak as shown in Fig. 7-27. Video amplitude is black level to white.

f. Move the Ch 1 10× probe to TP419 on A12. Connect the probe ground lead to TP417 on A12.

g. ADJUST—R391 (Green Gain) on A13A1 so that the video amplitude is 30 V peak-to-peak.

h. Move the Ch 1 10× probe to TP410 on A12. Connect the probe ground lead to TP405 on A12.

i. ADJUST—R191 (Blue Gain) on A13A1 so that the video amplitude is 25 V peak-to-peak.

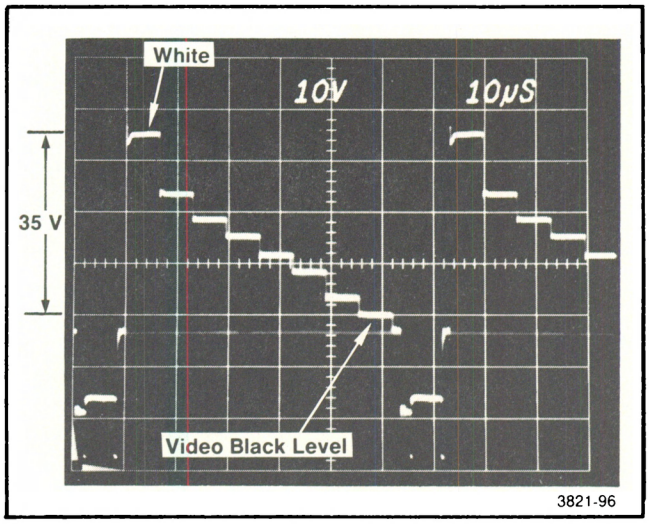

Fig. 7-27. Proper output video amplitude at TP437 on A12.

j. Disconnect the Ch 1 10× probe from TP410 and TP405 on A12.

31. Frequency Response Adjustments

a. Leave the following mid-frequency and high-frequency adjustments at their factory-adjusted settings for optimum step response:

L173, L373, L573, R173, R400, and R600 on the Video Amplifier board, A13A1. L409, L419, and L445 on the CRT Socket board, A12.

b. If any of these components are replaced, set the adjustment to midrange.

CRT SOCKET A12
HIGH VOLTAGE REGULATOR A7A2A1
CONVERGENCE CONTROL A8A1
VIDEO AMPLIFIER A13A1

32. Adjust Green, Red, and Blue Screen (R148, R158, R138). Readjust Black Level Preset (R905) and Input DC Bal (R525, R125).

a. Use the same equipment setup conditions and control settings as shown in Fig. 7-24 except use the test oscilloscope differential amplifier and set the test oscilloscope controls as follows:

+Input	DC
−Input	Gnd
Deflection Factor	20 V/div
Bandwidth	Full
Triggering Level	Fully cw
Sweep Rate (Delay Time)	2 ms/div
Delayed Sweep Rate	200 μs/div

b. Connect the test oscilloscope +Input 10× probe to TP325 (Green) on A12. Connect the probe ground lead to TP417 on A12. Set the Delay Time Multiplier to display the vertical interval as shown in Fig. 7-28.

c. ADJUST—R148 (Green Screen) on A7A2A1 so that the beam current sample interval of the video waveform is at −80 V. See Fig. 7-28.

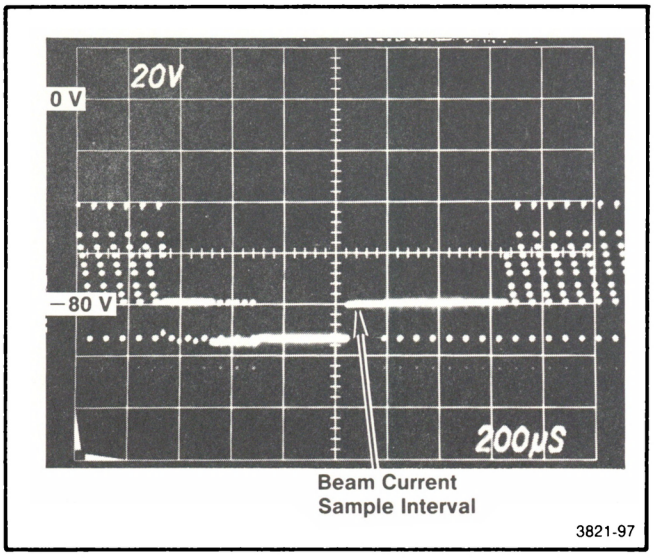

Fig. 7-28. Proper red screen dc level at TP337 on A12.

d. Set the test oscilloscope controls as follows:

−Input	Vc
Deflection Factor	1 V/div
Comparison Voltage	−68 V
Triggering Level	1/3 Clockwise
Sweep Rate	10 µs/div

e. Set the test oscilloscope Comparison Voltage control to position the video black level of the waveform into view.

f. ADJUST—R905 (Black Level Preset) on A8A1 for minimum video black level movement as the CONTRAST control is varied.

g. Move the test oscilloscope +Input 10× probe to TP337 (Red) on A12. Connect the probe ground lead to TP425 on A12.

h. Set the test oscilloscope controls as follows:

−Input	Gnd
Deflection Factor	20 V/div
Triggering Level	Fully cw
Sweep Rate (Delay Time)	2 ms/div
Delayed Sweep Rate	200 µs/div

i. ADJUST—R158 (Red Screen) on A7A2A1 so that the beam current sample interval of the video waveform is at −80 V.

j. Repeat parts d and e of this step.

k. ADJUST—R525 (DC Bal) on A13A1 for minimum video black level movement as the CONTRAST control is varied.

l. Move the test oscilloscope +Input 10× probe to TP309 (Blue) on A12. Connect the probe ground lead to TP405.

m. Repeat part h of this step.

n. ADJUST—R138 (Blue Screen) on A7A2A1 so that the beam current sample interval of the video waveform is at −80 V.

o. Repeat parts d and e of this step.

p. ADJUST—R125 (DC Bal) on A13A1 for minimum video black level movement as the CONTRAST control is varied.

q. Disconnect the +Input 10× probe from the test points.

r. Swing the video amplifier assembly, A13, to its closed position and reinstall the mounting screw.

COLORIMETRY (CONVERGENCE CONTROL A8A1)

33. Adjust Red, Green, and Blue White-Balance (R701, R705, R711)

a. Use Fig. 7-3 as a guide for the equipment setup conditions and control settings.

b. Decrease the room lighting to a very low level.

c. Depress the 690SR DEGAUSS button for at least 5 seconds.

d. Check that the video test signal generator controls are set for full field 100% or 100 IRE flat field signal output. Check that all the 690SR crt beams are on; that is, Screen switches S602, S606, and S612 on A8A1 are set to On.

e. Depress the J16 Digital Photometer X.1 push button. With no light entering the J6503 Luminance Probe, zero the J16.

f. Depress the J16 X1 push button. Place the J6503 Luminance Probe close to the 690SR crt faceplate at the center of the screen.

g. ADJUST—R701, R705, R711 (White-Balance) on A8A1 to obtain a 30 foot-lambert reading on the J16 Digital Photometer.

NOTE

If any of these adjustments do not have enough range, readjust R591, R391, or R191 on A13A1 in a direction that will provide more range.

h. Remove the J6503 Luminance Probe from the 690SR crt faceplate.

i. Set the optical comparator to 30 foot lamberts. Hold the optical comparator so the light pipe is placed against the 690SR crt faceplate at the center of the screen.

NOTES

1. If the comparator cannot be set as high as 30 foot lamberts, decrease the generator flat field output signal level (or use a detentable attenuator) to be within the highest light output of the optical comparator.

2. Be sure the ambient lighting in the room is sufficiently low and the proper color so that color balance can be adjusted accurately. A black paper mask, with a center cutout hole, could be placed over the crt faceplate to eliminate ambient light.

j. READJUST—R701, R705, R711 (White-Balance) on A8A1 so the color of the test spot with all beams on matches the color of the optical comparator reference field.

k. Remove the optical comparator.

l. INTERACTION—Repeat parts e through j to obtain proper high-light color balance and 30 foot-lambert display luminance.

m. Set the J16 POWER switch to OFF. Remove the J6503 Luminance Probe from the J16 Digital Photometer. In its place, install a J6502 Irradiance Probe with its light occluder on the J16. Depress the J16 POWER and X.1 push buttons. With no light entering the J6502 Probe, zero the J16.

n. Depress the J16 Digital Photometer $\times 10$ push button and place the J6502 Irradiance Probe with its light occluder against the 690SR crt faceplate at the center of the screen.

o. Using Table 7-5, obtain individual high-light output readings in $\mu W/cm^2$ for the red, green, and blue screens. Record these readings in the table for use as a "secondary" reference and to derive the low-light color balance readings.

Table 7-5
PHOTOMETER READINGS

690SR Screen Switches on A8A1			690SR Display	J16 Photometer Readout (using an irradiance probe)
Red (S602)	Green (S606)	Blue (S612)		
On	Off	Off	Red	
Off	On	Off	Green	
Off	Off	On	Blue	

NOTE

J16 Photometer readings, obtained when color balance was adjusted at the factory, were recorded on a label located on the crt shield. Due to differences in J16/J6502 calibration and aging of the 690SR crt, these readings may not agree with those obtained in part o of this step.

p. Remove the J6502 Irradiance Probe with its light occluder from the 690SR crt faceplate.

34. Adjust Red, Green, and Blue Black-Balance (R801, R805, R811)

a. Continuing from step 33, set the video test signal generator controls to obtain a full field 7.5 IRE flat field output for NTSC; 0% flat field output for PAL and SECAM standards.

NOTE

If a 7.5 IRE flat field signal is not readily available, use a 10 IRE flat field signal. Then, when performing Step 34, part c, the low-light reading should be 1/121 times the high-light reading.

b. Depress the J16 Photometer X.1 push button. Place the J6502 Irradiance Probe with its light occluder against the 690SR crt faceplate at the center of the screen.

c. ADJUST—R801 (Red), R805 (Green), and R811 (Blue) Black-Balance adjustments on A8A1 for the appropriate beam to obtain 1/200 times the photometer readings as given in Table 7-5. For example, with the Green and Blue Screen switches (S606, S612) on A8A1 set to Off, and the Red Screen switch (S602) set to On, adjust R801 to obtain 1/200 times the reading as recorded for red in Table 7-5. (Note: The low-light readings are set to 1/200 times the high-light readings.)

d. INTERACTION—If any of the Black Balance adjustments do not have enough range, repeat step 25 except as follows: Readjust R119 (+12 V Cal) on A13A1 in a direction that will move the range towards center but still not exceed a difference reading of 200 mV between the +12 V and −12 V test points. Repeat steps 27 and 28. Then, repeat parts 33d through 34c.

e. Remove the J16 with its probe and light occluder from the faceplate of the crt.

f. Check that the 690SR Screen switches (S602, S606, S612) are set to On.

This completes the adjustment procedure.

TROUBLESHOOTING

The following are a few aids and suggestions that may assist in locating a problem. After the defective assembly or component has been located, refer to the Corrective Maintenance part of Section 9 in this manual for removal and replacement instructions.

NOTE

No repair should be attempted by unqualified personnel.

Troubleshooting Aids

Theory of Operation. A circuit description is provided in Section 5. Used in conjunction with the schematic diagrams in Section 12, the information provided is helpful when analyzing circuit operation.

Foldout Pages. The foldout pages at the back of the manual contain significant information useful for troubleshooting the instrument. Block and schematic diagrams, waveforms, circuit-board, component, and adjustment illustrations, and parts locating charts are located on foldout pages. See Fig. 8-1.

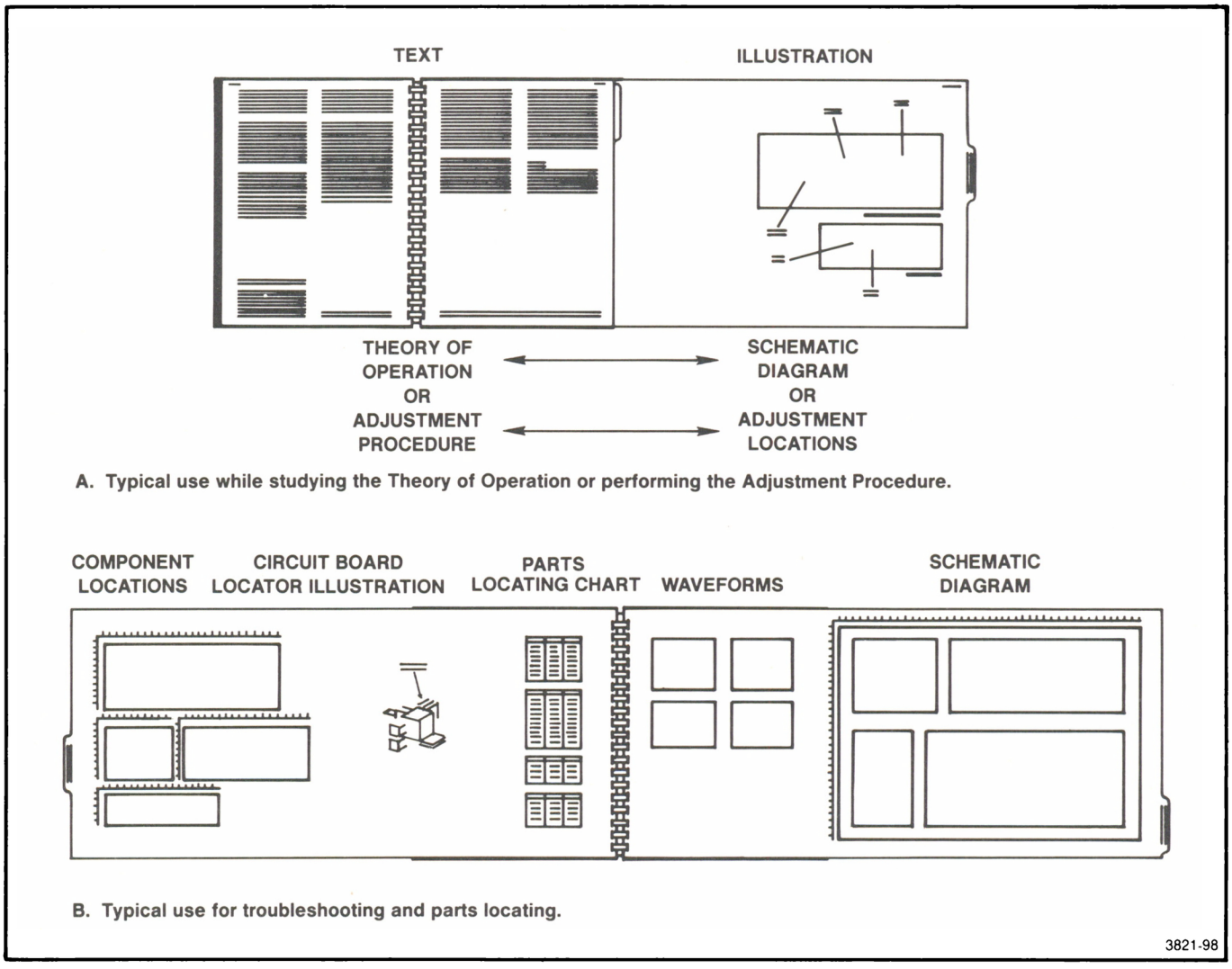

Fig. 8-1. Using the foldout pages.

Diagrams. Block and circuit diagrams are the most often used aids to troubleshooting. The circuit number and electrical value of each component is shown on the diagrams (see the first page in Section 12 for definition of the reference symbology used to identify components in each circuit). Refer to the Replaceable Electrical Parts list for a complete description of each component. Those portions of the circuit that are mounted on circuit boards or assemblies are enclosed in a black border, with the name and assembly number shown on the border.

NOTE

Check the Change Information section at the rear of the manual for inserts describing corrections and modifications to the instrument and manual.

Circuit Board Illustrations. Electrical components, connectors, and test points are identified on circuit board illustrations located on the inside fold of the corresponding circuit diagram, or the back of the preceding diagram. An illustration for circuit board location is also provided next to the appropriate component location illustration. Adjustment location illustrations are also provided to aid in the calibration of the instrument. These illustrations precede the schematic diagrams.

Parts Locating Chart. The schematic diagrams and the circuit board illustrations are assigned location grids. A parts locating chart for each assembly gives grid locations of components on both the circuit board and the schematic diagram.

Assembly and Circuit Numbering. The circuit boards and other assemblies (except for the chassis and the front- and rear-panel components) are assigned assembly numbers. Assemblies are designated by the letter A and a number. A second letter A appearing after the first assembly designator represents a sub-assembly to the main assembly. As many as three assembly letter designators may appear in one number to label a sub-assembly.

Each component is assigned a circuit number according to its geographic location within an assembly.

The Replaceable Electrical Parts list is arranged in assembly-by-assembly order, as designated by ANSI Standard Y32.16-1975. The component number in the parts list is made up by combining the assembly number and the circuit number.

EXAMPLE: R25 on A8A1 would be listed in the parts list as A8A1R25.

Chassis-mounted parts, such as front- and rear-mounted controls, connectors, and indicators, have no assembly number. The parts list number is the same as shown on the schematic. Any three-digit component number in the parts list refers to a part mounted on the front or rear panel, or the chassis.

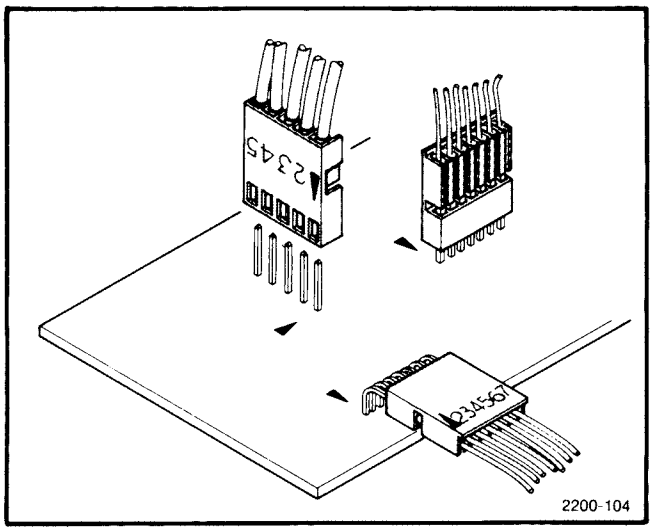

Fig. 8-2. Multi-pin circuit board connector.

NOTE

The component number should be used when ordering replacement parts.

Component Identification

Wire Color Codes. Tektronix color coding of insulated wires conforms to MIL-STD-104A 1967 Identification Coding and Application of Hookup and Lead Wire. Applicable Documents are, NEMA WC 30-1974 Color Coding of Wires and Cables, EIA RS-366 1967 Color Coding of Chassis Wiring, and UL 1007, 1430/CSA TR64 (for gray-based wire used in ac primary wiring). To identify the function of a wire by its colors, refer to Table 8-1.

Table 8-1
COLORS FOR WIRE IDENTIFICATION BY FUNCTION

Function	Base Color	ID Code
Grounds, grounded elements[1]	Black	0-X
Heaters or filaments	Brown	1-X
+Voltages[2]	Red	2-X
Screen grids	Orange	3-X
Cathodes and transistor emiters[3]	Yellow	4-X
Anodes (plates) and transistor collectors[3]	Blue	6-X
−Voltages[2]	Violet	7-X
Ac power (internal)[4]	Gray	8-X
Ungrounded (line)	Gray-Black	8-0
Grounded (neutral)	Gray-White	8-9
Safety ground (earth)	Green-Yellow	5-4
Signal wiring[5]		9-X

[1] Floating grounds will have black insulation with one white tracer.

[2] Referenced to chassis ground.

[3] Applies to diodes, semiconductor elements, and other elements with operation similar to electron tubes and transistors.

[4] Unrectified transformer secondary wiring, except ac heaters and filaments, is considered internal ac wiring.

[5] White insulation will be used for all interconnecting wires, unless a particular color is prescribed in the equipment or system specification to identify a definite arrangement of elements, a specific function, or a hazardous condition.

Connectors. Intercircuit connections are made by various connector types. Edge-pin connectors are used for assembly-to-assembly connections on common interconnect boards. Multiple-terminal connectors in harmonica-type plastic holders are used for wire-cable interconnection of circuit boards. The terminals in the holder are identified by numbers that appear on the holder and the circuit diagrams. Connector orientation to the circuit board is keyed by triangles on the holder and the circuit board (see Fig. 8-2).

All connectors are identified by 'P' and 'J' letters preceding the connector number. A connector number preceded by 'P' defines the most movable portion of the connector. Conversely, a connector number preceded by 'J' defines the most stationary portion of the connector.

Resistors. Composition (brown body), metal-film (gray or light blue body), and power resistors are used in this instrument. The resistance values of composition and metal-film resistors are color coded on the component in accordance with the EIA standard color code (some metal-film resistors may have the value printed on the body). Refer to Section 12, Diagrams for Color Codes for Resistors and Capacitors.

Capacitors. The capacitance value of common disc capacitors, electrolytics, and ceramics are marked in μF or pF on the side of the component body. The white ceramic capacitors and tantalum electrolytics are color coded. Refer to Section 12, Diagrams for Color Codes for Resistors and Capacitors.

Diodes. The cathode of each glass-encased diode is indicated by a stripe, a series of stripes, or a dot. Some diodes have a diode symbol printed on one side. Light-emitting diodes have a distinctive shape to the cathode lead.

Transistors and Integrated Circuits. The generic name of a transistor or integrated circuit (IC) is usually printed on the part. If not, reference to the Replaceable Electrical Parts list in Section 11 is the best source for component identification.

Troubleshooting Equipment

The following signals and equipment are useful for troubleshooting the picture monitor. Refer to the equipment lists in Sections 6 and 7 also for appropriate signal sources and other useful equipment.

1. Signal. The signal used for the waveform pictures in Section 12 is an NTSC standard 100% amplitude full field color bar luminance signal with a 100% white bar and 7.5% setup.

2. Test Oscilloscope. Frequency response: dc to 50 MHz. Minimum deflection factor: 50 mV/div with a 10X probe. Sweep rate: 2 ms/div to 100 ns/div.

3. 10X Probe. Matches input capacitance of test oscilloscope. Useful bandwidth: 50 MHz.

4. Ac Current Probe. Sensitivity 10 mA/mV. Accuracy: ±3%. For use with a real-time oscilloscope to measure 5.0 A peak.

5. Semiconductor Tester. Some means of testing the transistors, diodes, and FETs used in this instrument is helpful. A curve tracer will give the most complete information.

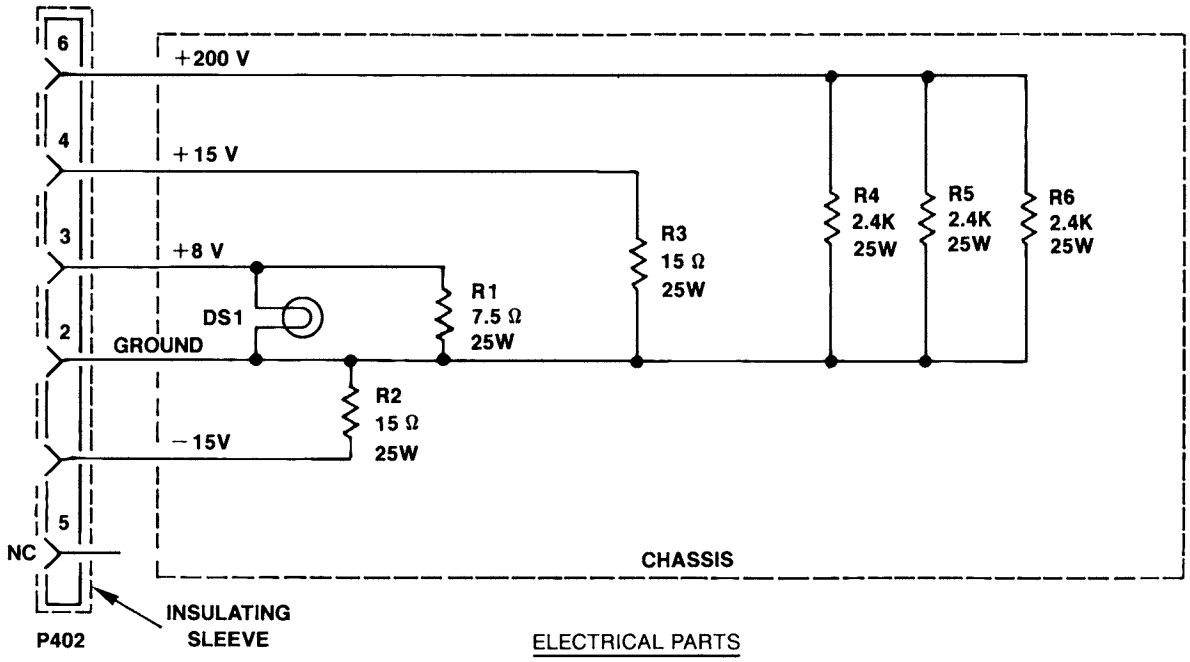

ELECTRICAL PARTS

DS1	150-0089-00	LAMP CARTRIDGE: 14V, 80 MA
R1	308-0184-00	RES.,FXD,WW: 7.5 Ω,5%,25W
R2	308-0133-00	RES.,FXD,WW: 15 Ω,5%,25W
R3	308-0133-00	RES.,FXD,WW: 15 Ω,5%,25W
R4	308-0041-00	RES.,FXD,WW: 2.4 kΩ,5%,25W
R5	308-0041-00	RES.,FXD,WW: 2.4 kΩ,5%,25W
R6	308-0041-00	RES.,FXD.WW: 2.4 kΩ,5%,25W

MECHANICAL PARTS

P402	352-0202-00	HOLDER,TERM CONN: 6 WIRE,0.15 IN SPACING
(6)	131-0621-00	CONNECTOR,TERMINAL
(1)		INSULATING SLEEVE (FOR P402)
(1)	136-0164-00	LAMP HOLDER: 0.375 IN MOUNTING HOLE

3821-150

8-3. Schematic and parts list for minimum load unit.

6. Variable Auto Transformer. Capable of 10 A at 70 V ac to 127 V ac.

7. Minimum Load Unit 067-0998-00. Provides a load for the 690SR Power Supply assembly A7. A minimum load unit may be built from information (schematic and parts list) given in Fig. 8-3. Electrical insulating tape or similar insulation should be wrapped around the sides of the connector holder to prevent the connector pins from grounding on the 690SR chassis.

8. Digital Voltmeter. Input resistance: 10 MΩ. Accuracy of ac and dc readings: 0.1%.

9. Rigid Module Extender Card 067-0999-00. For extending module assemblies so test points can be reached.

10. Flexible Interface Module Extender Cable 067-1000-00. For extending the decoder interface module.

Circuit Board Service Position

Table 8-2 describes how to extend a circuit board or an assembly so that test points and adjustments are accessible.

CAUTION

Set the instrument POWER switch to OFF while placing a circuit board or assembly in the service position.

After the circuit board or assembly is placed in the service position, the instrument POWER switch can be set to ON.

Table 8-2
CIRCUIT BOARD SERVICE POSITION

Circuit Board or Assembly	Procedure
High Voltage Regulator A7A2A1	1. Remove the Power Supply assembly, A7, from the mainframe but leave the cable connectors attached. Remove top vented cover from HV Power Supply A7A2. 2. Remove the four screws that hold High Voltage Regulator board A7A2A1 to the assembly. Leave the nut blocks attached to the board. 3. Remove the screw that goes through A7A2A1 and the plastic spacer to high voltage transformer T100 assembly. 4. Remove the screw that goes through A7 heatsink to Q304 heat sink nut block. 5. Unclamp the wires that go to J130 and J150 on A7A2A1. 6. Raise the board so the upper two mounting holes are aligned with the lower two nut blocks on the board. Use two of the removed screws to hold the board extended out of the power supply assembly.
Convergence Control A8A1 and Convergence Generator A8A2	1. Unlock the front drawer and pull it open. 2. Remove four screws that hold down Convergence Control board A8A1. Leave A8A1 attached to the hinges at the right side. 3. Disconnect P827 from J827. 4. Swing board A8A1 up to its vertical position for access to the back of A8A1 and to the component side of A8A2.
Raster Control A9, Vertical Deflection A10, Horizontal Deflection A11, and Convergence Output A14	**Partial Accessibility** 1. **For A10 and A11 only.** Remove four screws from the crt neck shield. Remove the cover. Slide the wires, going to the board, out of the cable clamp. 2. Remove the assembly from the mainframe but leave the cable connectors, if present, attached. 3. Connect a rigid module extender card to the assembly. 4. Connect the assembly, via the extender, to the mainframe. 5. Use one of the removed screws to hold the top of the assembly securely to the mainframe bracket. 6. **For A10 and A11 only.** When reinstalling the assembly in the mainframe, be sure to place the wires under the cable clamp in the original manner; that is, dress the wires close to the chassis to avoid crosstalk with the crt socket wires.

Table 8-2 (cont)

Circuit Board or Assembly	Procedure
Raster Control A9, Vertical Deflection A10, Horizontal Deflection A11, and Convergence Ouput A14 (cont)	**Full Accessibility** 1. To obtain full access to the component side of a circuit board when preparing to extend the assembly, remove the cover from the assembly. 2. To make the Horizontal Deflection board A11A1 fully accessible after removing the cover from the assembly, use the following procedure: a. Remove A11A2 from the four standoff posts. Leave all the multipin connectors attached to the board. b. Remove the two standoff posts located next to TP546 and J110. Mount these posts on the cooling fin side of the heatsink directly opposite their original location. c. Turn A11A2 over so the component side of the board faces the cooling fan side of the heatsink for A11. Secure board A11A2 to the stand-off posts that were placed on the back of the heatsink for A11.
CRT Socket A12 and Video Amplifier A13	1. Remove the top-rear, center, flat-head screw that holds A13 in the closed position. 2. Lower the assembly (A13) to its horizontal position to obtain access to the component sides of boards A12 and A13A1.

Troubleshooting Procedure

This procedure is arranged in a sequence that checks the simple trouble possibilities first.

1. Check Control Settings. Incorrect control settings or wrong internal jumper positions can indicate a trouble that does not exist. If there is any question about the correct settings or operation of any control or jumper, refer to Sections 4 and 12 in this manual.

2. Check Associated Equipment. Before troubleshooting the instrument, check that the applied signal is correct and properly connected. Check that any probe used is properly compensated and not defective.

3. Isolate the Trouble to an Assembly. If the picture monitor is at fault, isolate the trouble to an assembly by noting the trouble symptoms. Use the knowledge attained from the Operator's Familiarization, Theory of Operation, and Performance Check Procedure sections to identify the nature of the trouble.

In the case of a catastrophic component failure in one of the assemblies, which usually pulls too much current, the green LED POWER indicator will flash and/or an audible 'tick' will be heard in the area of the Power Supply assembly, A7. This may also happen if too little load is drawn from the LV Supply (the edge card connector may not be lined up properly). In this situation, use this procedure to isolate the bad assembly.

a. As each assembly or connector is removed in sequence, monitor the green POWER indicator and/or 'tick' from the power supply assembly. If the POWER indicator glows steadily and/or the 'tick' disappears after an assembly is removed, stop and check that assembly for defects.

NOTE

Before the removal of any assembly or connector, TURN THE POWER SWITCH TO OFF. After each assembly has been removed and all connections are in a safe place, turn the POWER switch back to ON.

b. Unplug the interface module from the mainframe.

c. Remove the vented top cover of the High Voltage Power Supply, A7A2. Unplug P128 from J128 on the High Voltage Regulator board, A7A2A1.

d. Remove the Convergence Output assembly, A14, from the mainframe.

e. Remove P216 from J216 on the Center Interconnect board, A1, to remove power from the Video Amplifier board, A13A1.

f. Connect the Minimum Load Unit, 067-0998-00, to J402 on the Low Voltage Output board, A7A1A3.

g. Remove the Horizontal Deflection assembly, A11, from the mainframe.

h. Remove the Vertical Deflection assembly, A10, from the mainframe.

i. Remove the Raster Control assembly, A9, from the mainframe.

j. In the drawer, unplug P270 from J270 on the Convergence Control board, A8A1. This removes the power from the Convergence Generator board, A8A2. It also removes the power from the green LED. However, the same observation may be made of the Minimum Load Unit's pilot light as that of the POWER indicator.

k. In the drawer, unplug P470 from J470 on the Convergence Control board, A8A1.

l. Unplug P502 and P209 from the High Voltage Regulator board.

m. Remove the Power Supply from the mainframe. If it still fails to operate properly, refer to Low Voltage Power Supply A7A1 Troubleshooting Procedure in this section.

4. Isolate Trouble to a Circuit. Isolate the trouble to a circuit by noting the trouble symptoms. Use the knowledge attained from the Operator's Familiarization, Theory of Operation, and Performance Check Procedure sections to identify the nature of the trouble. Then, use steps 5 through 7 to isolate the trouble to the probable cause, such as a defective component or connection.

5. Visual Check. Visually check the portion of the instrument in which the trouble is suspected. Some troubles can be located by checking for unsoldered connections, broken wires, loosely-seated transistors, loose-fitting connectors, damaged components, blown fuses (see Secton 9 for Internal Fuses), or damaged circuit boards.

6. Check Voltages and Waveforms. Often the defective component or stage can be located by checking for correct voltages or waveforms in the circuit. Typical waveforms are given on the inside panel of the schematic diagrams. To obtain operating conditions similar to those used to take these waveforms, refer to the instructions at the start of Section 12, Diagrams.

CAUTION

Because of component density on circuit boards, care should be taken with meter leads and probe tips. Accidental shorts can cause abnormal voltages or transients that may destroy components. "Ground Lugs" are not always at ground potential. Check the diagrams before using such connections as ground for meter leads or oscilloscope probes. Some transistor cases may be elevated.

7. Check Individual Components. After isolating the trouble to one circuit or stage, the next step is to isolate the trouble to one component or part. Components that are soldered in place are best checked by disconnecting one end to isolate the measurement from the efects of surrounding circuitry. The following methods are provided for checking individual electrical components in the instrument.

a. Transistors. Semiconductor failures account for the majority of electronic equipment failures. Substitution is often the most practical means for checking their performance. The following guidelines should be followed when substituting these components:

1. First determine that circuit voltages are safe for the substituted component, so the replacement will not be damaged.

2. Use only good components for substitution.

3. Switch the POWER to OFF before a component is substituted.

4. Be sure the component is inserted properly in its socket. Check for good solder connections.

CAUTION

For transistor devices that use a BLUE RECTANGULAR INSULATOR (Part No. 342-0563-00), DO NOT USE ANY HEAT-CONDUCTING GREASE on either side of the insulator. Heat-conducting greases contain solvents that will attack and dissolve the blue insulator. When replacing other types of transistors that use other types of insulators and are mounted with heat sinks, check that these transistors have adequate heat-conducting grease for proper thermal conduction.

WARNING

Handle thermal-conducting grease with care. Avoid getting the grease in your eyes. Wash hands thoroughly after use.

NOTE

If a substitute is not available, check the transistor with a dynamic tester such as the TEKTRONIX 577 Curve Tracer. Static-type testers, such as an ohmmeter, can be used to check the resistance ratio across some semiconductor junctions if no other method is available. Use the high-resistance ranges (R X 1 kΩ or higher) so the external test current is limited to less than 6 mA. If uncertain, measure the external test current with an ammeter. Resistance ratios across base-to-emitter or base-to-collector junctions usually run 100:1 or higher. The ratio is measured by connecting the meter leads across the terminals, noting the reading, then reversing the leads and noting the second reading.

b. Integrated Circuits. Integrated circuits should **not** be replaced unless they are actually defective. Check input- and output-signal states as described in the circuit description and waveforms in Section 12, Diagrams. Be sure that circuit conditions are not such that a replacement component might be damaged.

c. Diodes. Most diodes can be checked in the circuit by using an in-circuit diode checker or unsoldering one end and using an ohmmeter. The best method to check the operation of a diode is with a dynamic tester (curve tracer).

d. Resistors. Resistors can be checked with an ohmmeter. Check the Replaceable Electrical Parts list for the tolerance of the resistors used in the instrument. Resistors normally do not need to be replaced unless the measured value is outside the specified tolerance.

e. Inductors & Switch Contacts. Check switch contacts (that should be normally closed) and inductors for an open circuit by checking continuity with an ohmmeter. Check for shorted turns of an inductor with an inductance meter or by noting an abnormally small resistance measurement.

f. Capacitors. A leaky or shorted capacitor can best be detected by checking the resistance with an ohmmeter on the highest scale. Do not exceed the voltage rating of the capacitor. An open capacitor can best be detected with a capacitance meter or by checking if the capacitor passes ac signals.

Low Voltage Power Supply A7A1 Troubleshooting Procedure

The following procedure is recommended when attempting to isolate a problem and expedite repairs in the Low Voltage Power Supply.

1. Check the heat sink fuses (F100, F101).

a. Check the Inverter (F100) and the Line (F101) fuses for an open circuit. Replace any open fuse with a new part and switch the POWER to ON.

b. A repeated open Line fuse would generally indicate a shorted component in the circuitry encountered before the Inverter fuse.

c. A repeated open Inverter fuse would generally indicate a shorted component before T315. The switching transistors (Q205 and Q305) and related switching diodes (CR109 and CR106) are the components most likely to be damaged.

2. Determine the source of the shutdown. The source of a power supply shutdown may not always be in the power supply module, especially if the fuses were not open.

a. Set the POWER switch to OFF and unplug the power cord from the instrument. Remove the Power Supply assembly, A7, from the mainframe (refer to Power Supply A7 Removal in Section 9).

b. Connect the 067-0998-00 Minimum Load Unit to J402 (labeled MINIMUM LOAD UNIT) on the Low Voltage Output board, A7A1A3. Connect a voltmeter to measure 200 V dc on pin 6 of J402.

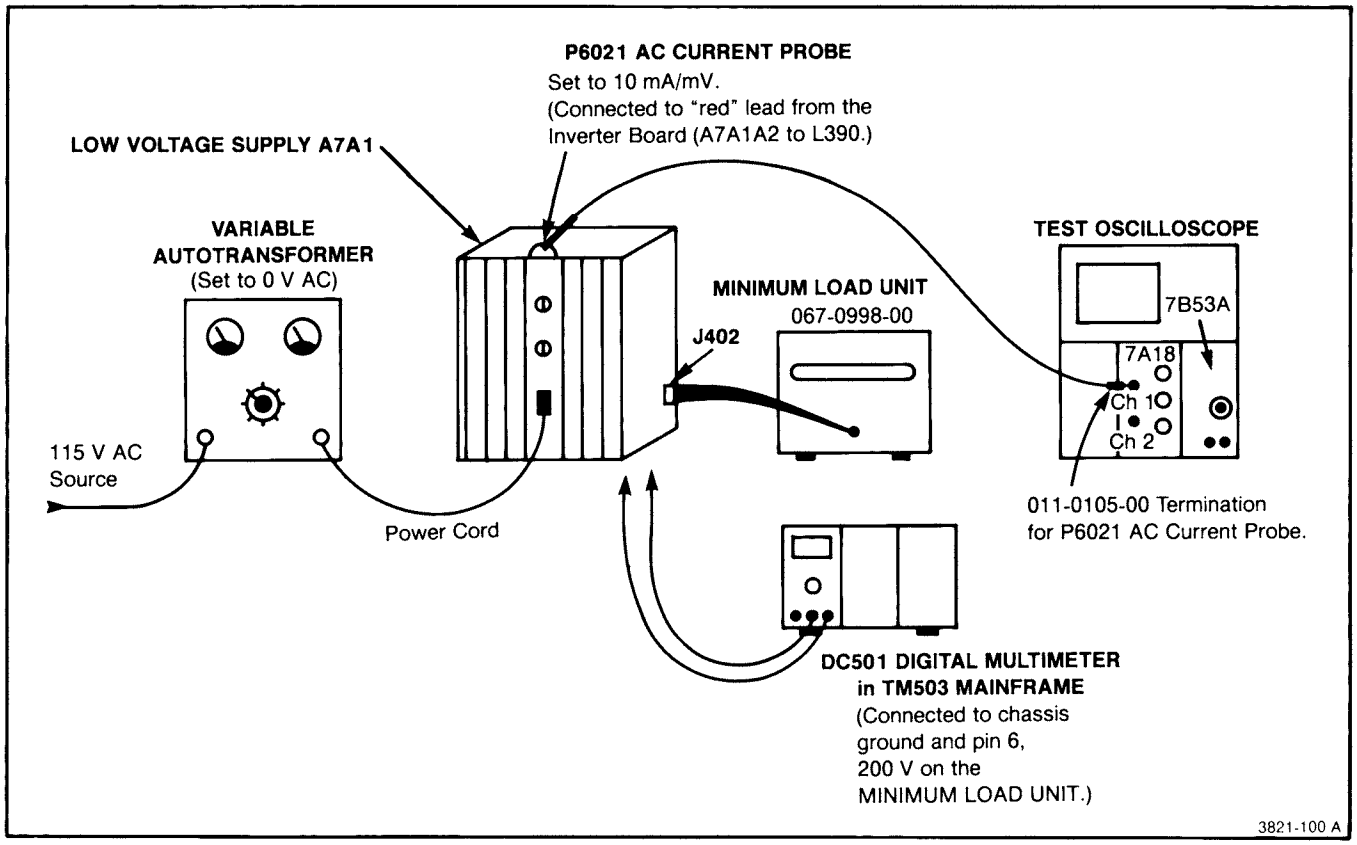

Fig. 8-4. Setup for troubleshooting the Low Voltage Power Supply.

WARNING

If a failure has occurred in the High Voltage circuits such that the absence of scan fail signals from the mainframe are ignored when the Power Supply assembly, A7, is removed from the monitor, 25 kV can be present inside the High Voltage integrated transformer, A7A2A3, and other dangerous voltages will appear on the High Voltage Regulator board, A7A2A1. To avoid this condition, P128 can be removed from J128 at the top of the High Voltage Regulator board. However, to isolate a failure to the High Voltage transformer assembly, P128 must be connected.

c. Plug in the power cord to the power supply and set the POWER to ON. Check for the proper voltage outputs at J402. Go to part d if the power supply is operational. If the power supply fails to operate, set the POWER to OFF and unplug P128, P502, and P209 from the High Voltage Regulator board, A7A2A1. Set the POWER to ON . An operational Low Voltage Supply (LV Supply) would indicate a failure in the High Voltage Supply. If the LV Power Supply failed to operate, go to part e.

d. If the source of the problem was determined to be in the mainframe, replace the Power Supply assembly, A7, and remove the Minimum Load Unit. Refer to Troubleshooting Procedure in this section and complete step 3 to isolate the bad assembly.

e. If the power supply fails to operate under the above conditions, remove the High Voltage Power supply, A7A2, and proceed to the next steps for checking the internal operation of the LV Power Supply circuits.

3. Check the Output board, A7A1A3, and the power supply start network. Use the equipment and setup arrangement shown in Fig. 8-4. Also refer to Fig. 8-5.

a. Jumper pins 1 and 2 of J431 and J435. This disables the pre-regulation control at pins 8 and 9 of U409 by grounding the bases of Q322 and Q335. Connect a ground jumper from the junction of R345 and R425 on the Inverter board, A7A2A1, to ground.

b. Monitor pin 6 of J402 with a voltmeter to measure a range of 0 V to 250 V dc. Monitor the "red" lead from

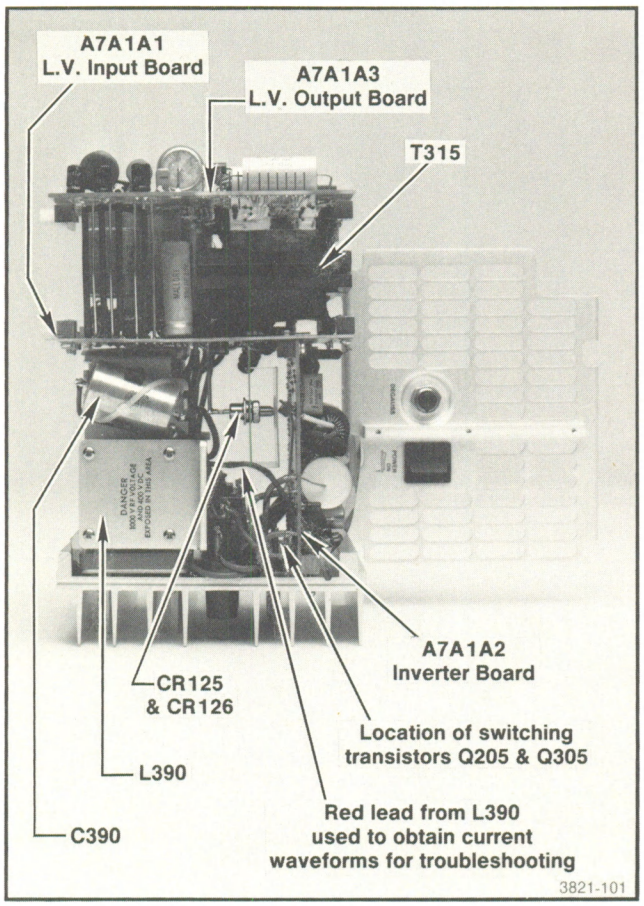

Fig. 8-5. Low Voltage Power Supply shown with the protective covers removed and the lower switch plate mounted to the heat sink. All components are now accessible for troubleshooting.

the Inverter board to L390 with an **ac** current probe for a current waveform of 3.5 A peak-to-peak.

"Slowly" adjust the voltage output on the variable auto-transformer from 0 V to 70 V ac. When 70 V is reached, the start network should activate the "free-running" oscillator (Q205, Q305, CR109, CR205, and T225), forming an approximate 25 kHz current sinewave 1.2 A peak (shown in Fig. 8-6). Pin 6 of J402 should read approximately 150 V dc.

If the current waveform is much greater than 1.2 A peak, quickly reduce the output voltage of the variable auto-transformer to lower the oscillator current.

NOTE

The oscillator is rated to operate at 5.0 A peak. If a part is shorted on the Output board, this power level may burn the circuit board.

The Inverter fuse (F100) may have opened if the variable auto-transformer was not reduced quickly enough in response to excess current flow. If this happens, return the variable auto-transformer to 0 V, replace F100, and try to start and maintain power supply operation at a lower input voltage.

An open Inverter fuse may indicate shorted components on the secondary side of T315. By operating the power supply at a lower input voltage (once it has been started), the faulty output circuit may quickly be found by checking J402 for an output lower than would be expected from the power supply ratios.

If the power supply fails to start operating at 70 V ac input, check the oscillator circuit of Q205 and Q305 and also the start network (R108, R109, CR108, VR105, and Q115) for shorted or open components. The start network is functional if the waveform at 'T' on the Inverter board appears the same as Fig. 8-7. A shorted component (Q305, CR205, C390, L390, or Q115) could prevent C108 from being charged by R328. Replace any defective components and start this step over again. If the power supply fails to start after these checks, proceed to the next step.

4. Checking the Inverter Control circuits. Use the same equipment setup as in step 3. As in Connectors, J431 and J435 should still be jumpered. The junction of R345 and R425 on the Inverter board should still be jumpered to ground.

a. If the oscillator circuit does not start at this point, check the Inverter Control Bus for shorts (TP435). Check the LC network of L390, C390, transformers T315 and T225 for defects. If the power supply starts, but pulses, check the backup voltage limit transistor (Q319) and the backup current limit transistors (Q312 and Q315) for defects.

b. After all the preceding checks and any repairs have been made, the power supply should start. Therefore, continue with the assumption that the power supply has started at 70 V ac input from the variable auto-transformer and the current waveform is normal.

Check the backup voltage limit circuit. There should still be a jumper from the junction of R345 and R425 on the Inverter board to ground. Advance the variable auto-transformer to 90 V ac. The 200 V output at J402 should read approximately 210 V dc and the current waveform 1.7 A peak. Check TP355 for a 7 V waveform with a 500 ms period.

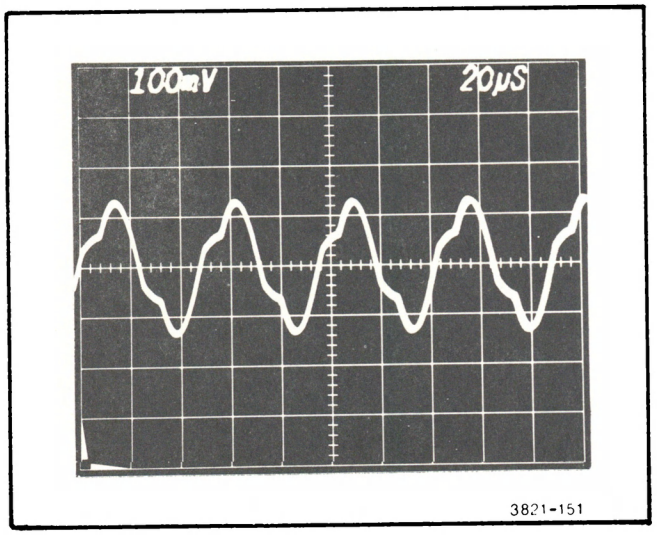

Fig. 8-6. Current waveform at L390.

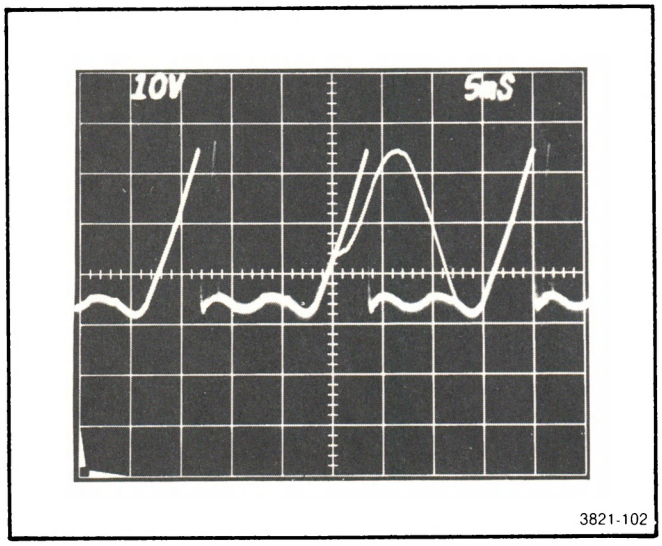

Fig. 8-7. Correct waveform at "T" on the Inverter board when the start network is functional.

NOTE

If the Low Voltage Cal adjustment (R462) is set too low, or if the voltage at J402 pin 6 is low, the waveform may not be present. Increase the variable auto-transformer until J402 pin 6 reaches 220 V.

If the waveform is present, remove the ground jumper and continue on to part c. If the waveform is absent, check the circuitry associated with Q319, Q338, Q339, and the voltage reference circuitry associated with R462 (Low Volt Cal). Remove the ground jumper.

c. Set the variable auto-transformer to 0 V and remove the jumper from P431. Advance the variable auto-transformer to 115 V ac. Check for 200 V dc at J402. If the power supply is pulsing, Q322 or U409 may be faulty. If the power supply is regulating, proceed to part d.

Check the following voltages at the pins of U409 to localize the problem.

Pin 1	+0.7 V dc	Over-current time limit.
Pin 2	0.0 V dc	Voltage null sense.
Pin 6	+7.5 V dc	+ Power supply for U409.
Pin 7	−2.0 V dc	− Power supply for U409.
Pin 15	0.0 V dc	Voltage feedback sense.

d. If the power supply is regulating after removing the jumper from P431, set the variable auto-transformer to 0 V and remove the jumper from P435. Advance the variable auto-transformer to 115 V ac. If the power supply is pulsing, Q335 or U409 may be faulty. Check the voltages listed in part c for U409. Pin 8 of U409 should be approximately 0.15 V dc.

After completing the preceding steps, the power supply should now be operational. Preadjust R462 and R463 as per part e outside of the instrument before proceeding. Remove the test probes and the Minimum Load Unit from the power supply and replace the High Voltage Supply. Return the power supply to the mainframe.

e. Adjust R462 (Low Volt Cal) for +15.3 V dc at J402 pin 4. Adjust R463 (Volts Null) for 0 V ±50 mV dc at TP460. Use R463 to increase the voltage at TP460 to approximately +0.15 V or until the power supply goes into the burst mode. Record the exact voltage reading at TP460 when the power supply went into the burst mode. Decrease the voltage at TP460 to approximately −0.15 V (by adjusting R463) or until the power supply goes into the burst mode and record that value. Take the difference of the two recorded voltages and center R463 between the two thresholds of the burst mode (approximately 0 V).

MAINTENANCE

Introduction

This section describes model procedures for preventive and corrective maintenance and special pre-calibration not included in Section 7, Adjustment Procedures. Preventive maintenance is a valuable tool to ensure maximum performance, locate defects that may not be apparent during regular operation, and even improve instrument reliability. Should the instrument fail to function properly, corrective action should be taken that may include partial disassembly. The corrective maintenance portion contains information relating to replaceable and non-replaceable parts, selected components, and instrument disassembly. The special pre-calibration procedures in the last part of this section provide steps necessary after certain critical parts have been replaced.

PREVENTIVE MAINTENANCE

A preventive maintenance procedure should be developed for an instrument that includes cleaning, visual inspection, performance checks, and if needed, recalibration. The following provides information under each of these topics and is presented in the best interest of instrument operation and longevity. The time period between each preventive maintenance check should occur no later than 6 months or 4000 hours of instrument operation (severe environment conditions may dictate a shorter time interval).

Cleaning

Dust accumulating in the instrument acts as an insulating blanket, preventing heat dissipation, and possibly causing overheating and component breakdown. Under high humidity conditions, accumulated dust can also provide an electrical conduction path.

CAUTION

Avoid the use of chemical cleaning agents that might damage the plastics used in this instrument. Avoid using organic cleaning solvents such as benzene, toluene, xylene, acetone, freon, or other halogenated hydrocarbon solvents. Use a non-residue type of cleaner, preferably isopropyl alcohol, or denatured ethyl alcohol. Before using any other type of cleaner, consult your local Tektronix Service Center or representive.

Exterior. Remove accumulated dust with a soft cloth or small paint brush. The brush is particularly useful around the front panel controls.

The remaining dust can be removed with a soft cloth, dampened in a mild detergent and water solution. Do not use abrasive cleaners.

Picture Tube (crt). Clean the crt face and bezel with a soft, lint-free cloth dampened with mild detergent and water. Repeat with a cloth dampened with water only.

Interior. The best way to remove accumulated dust inside the instrument is to blow it off with dry, low-velocity air. Remaining dust can be removed with a small paint brush followed by a soft cloth dampened in a mild detergent and water solution.

Visual Inspection

Visually inspect the instrument during the preventive maintenance routine for such defects as improperly installed transistors and integrated circuits, broken connectors, loose or disconnected pin connectors, poor solder joints, and damaged components.

The corrective procedure for most visible defects is obvious. However, if heat-damaged parts are discovered, try to determine the cause of overheating before the damaged part is replaced; otherwise the damage may be repeated.

Transistor and Integrated Circuit Checks

Periodic checks of the transistors and integrated circuits are not recommended. The best measure of performance is the actual operation of the component in the circuit. Performance of these components is thoroughly checked during

the performance check or recalibration, and any substandard transistors or integrated circuits will usually be detected at that time.

Performance Check and Adjustment Procedures

The Performance Check Procedure (Section 6) should be included in a preventive maintenance procedure to check the operation and electrical specifications of the instrument. Failure of any one step in the Performance Check Procedure indicates the need for recalibration or possible repair. The Adjustment Procedure is located in Section 7 of this manual. If the need for repair is evident, refer to the Corrective Maintenance segment in this section and Troubleshooting (Section 8).

Static-Sensitive Components

CAUTION

Static discharge can damage any semiconductor component in this instrument.

This instrument contains electrical components that are susceptible to damage from static discharge. See Table 9-1 for relative susceptiblity of various classes of semiconductors. Static voltages of 1 kV to 30 kV are common in unprotected environments.

Observe the following precautions to avoid damage.

1. Minimize handling of static-sensitive components.

2. Transport and store static-sensitive components or assemblies in their original containers, on a metal rail, or on conductive assemblies or components.

3. Discharge the static voltage from your body by wearing a wrist strap while handling these components. Servicing static-sensitive assemblies or components should be performed only at a static-free work station by qualified personnel.

4. Nothing capable of generating or holding a static charge should be allowed on the work station surface.

5. Keep the component leads shorted together whenever possible.

6. Pick up components by the body, never by the leads.

7. Do not slide the components over any surface.

8. Avoid handling components in areas that have a floor or work surface covering capable of generating a static charge.

9. Use a soldering iron that is connected to earth ground.

10. Use only special antistatic suction-type or wick-type desoldering tools.

Table 9-1
RELATIVE SUSCEPTIBILITY TO STATIC DISCHARGE DAMAGE

Semiconductor Classes	Relative Susceptibility Levels[a]
MOS or CMOS microcircuits or discretes, or linear microcircuits with MOS inputs. (Most Sensitive)	1
ECL	2
Schottky signal diodes	3
Schottky TTL	4
High-frequency bipolar transistors	5
JFETs	6
Linear microcircuits	7
Low-power Schottky TTL	8
TTL (Least Sensitive)	9

[a] **Voltage equivalent for levels:**

1 = 100 to 500 V 4 = 500 V 7 = 400 to 1000 V(est.)
2 = 200 to 500 V 5 = 400 to 600 V 8 = 900 V
3 = 250 V 6 = 600 to 800 V 9 = 1200 V

(Voltage discharged from a 100 pF capacitor through a resistance of 100 Ω.)

The components which are most susceptible to static discharge are listed in Table 9-2.

Table 9-2
COMPONENTS MOST SUSCEPTIBLE TO STATIC DISCHARGE

Circuit Board Number	Component Type	Schematic Number	Tektronix Part Number
A7A2A1	CMOS	U342	156-0704-00
A8A2	CMOS	U175, U271, U360	156-0644-03
A11A1	CMOS	U830	156-0514-01
A13A1	DMOS	Q291, Q491, Q691	151-1143-00

Internal Fuses

There are six fuses used in the 690SR. Information pertaining to fuse ratings, use, and location is provided in the following text.

1. F100 (Inverter Fuse) is a 125 V, 2.0 A fast-blow power supply fuse used to isolate the Inverter board, A7A1A2. Fuse F100 is externally accessible on the Low Voltage Power Supply heat sink.

2. F101 (Line Fuse) is externally accessible on the Low Voltage Power Supply heat sink. The amperage and voltage ratings are labeled in Section 12, schematic diagram 16, and on the information plate mounted on the heat sink.

3. F820 is a 250 V, 0.75 A fast blow fuse used to provide protection for the horizontal output transistor Q330. Fuse F820 is located on the Horizontal Deflection board, A11A1.

4. F152, F249, and F449 are 250 V, 1.0 A fast blow fuses used for over current protection from the power supply to the Convergence Yoke, A5, and the Convergence Output board, A14A1. All three fuses are located on the Convergence Output board.

CORRECTIVE MAINTENANCE

Corrective maintenance deals with replaceable and nonreplaceable parts, selected components, instrument disassembly, and special calibration procedures not covered in the Adjustment Procedure.

Obtaining Replacement Parts

Replacement parts are available from or through the local Tektronix, Inc., Field Office or representative.

Changes to Tektronix instruments are sometimes made to accommodate improved components as they become available, and to give you the benefit of the latest circuit improvements developed in our engineering department. It is therefore important when ordering parts to include the following information in your order: part number, instrument type or number, serial number, and modification number if applicable.

If a part that has been ordered is replaced with a new or improved part, the local Tektronix Field Office or representative will contact the customer concerning any change in the part number. After repair, the circuits may need recalibration.

Nonreplaceable Parts

There are some components in the 690SR that are replaceable only at the next highest assembly level. It is recommended for the customer to contact the local Tektronix Field Office or representative about the servicing of these components or assemblies. Refer to Table 9-3.

Selected Components

During calibration at the factory, some components are selected, if necessary, to help the instrument meet the performance requirements. Table 9-4 lists these components, component selection range, nominal value, and selection criteria.

Table 9-3
NON-REPLACEABLE COMPONENTS

Component Function	Circuit Number	Next Highest Assembly Level
Convergence Coils	L201, L202, L203 (Diagram 14)	A5 Blue Lateral & Convergence Assembly.
High Voltage Transformer	T100 (Diagram 15)	A7A2A3 High Voltage Transformer Assembly.
Static Focus	All included in encapsulated thick film, plus R257, R258, R259 (Diagram 15)	A7A2A2 HV Focus Board Assembly

Table 9-4
SELECTED COMPONENTS[b]

Component	Selection Range	Nominal Value	Selection Criteria
A7A2A1R346	110 - 174 kΩ	115 kΩ	Low frequency range limit
A7A2A1R435	9.0 - 12 kΩ	9.1 kΩ	High frequency range limit
A11A1R143	5.0 - 30 kΩ	27.4 kΩ	To allow proper range of adjustment for A11A1R144 (Horizontal Linearity).
A11A1R640	8.0 - 10 kΩ	9.09 kΩ	To adjust pulse width at TP740 to 18.4 ms ±5.0 ms.
A13A1R630	5.0 - 50 kΩ	36 kΩ	To adjust pulse width at J216 pin 30 to less than 500 ms.
A11A2C106		0.350 μF	Selected for best ramp linearity as a function of horizontal rate and size changes.
A11A2C107		0.055 μF	
A11A2C108		0.15 μF	
A11A2C210		0.350 μF	
A11A2C310		1.84 μF	
A11A2C357		0.82 μF	
A11A2R138	30.0 - 40.0 kΩ	35.0 kΩ	To adjust waveform at TP231 to be low for 25 μs ±0.5 μs.

[b] **Selected components must have same wattage and voltage rating as the original part.**

NOTE

To avoid stripping a screw or damaging components when reassembling the 690SR, be sure to use the proper torque setting.

Torque Specifications

The following are the torque specifications required for the screws used in assembling the 690SR.

2 - 56 UNC . . . . . 1.75 to 2.25 in/lbs
4 - 40 UNC and PNH . . . . . 3.5 to 5.0 in/lbs
6 - 32 PNH . . . . . 7.0 to 9.0 in/lbs
8 - 32 PNH . . . . . 14.0 to 18.0 in/lbs
10 - 32 UNF and FLH . . . . . 25.0 to 30.0 in/lbs
0.25 - 28 FLH . . . . . 80.0 to 90.0 in/lbs

Exceptions to the torque specifications list are as follows:

1. All screws securing TO-3 cased transistors, TO-220 and TO-127 cased transistors using plastic shoulder washers, and integrated circuits to the heat sinks.....4.0 to 5.0 in/lbs.

2. The screws securing the switching transistors (Q205 and Q305) through the ceramic strip in the Low Voltage Power Supply, A7A1 .....5.0 in/lbs.

3. The bolts securing the Low Voltage Power Supply transformer, T315, to the assembly chassis.....5.0 in/lbs.

4. The stand-off posts in the Horizontal Deflection, A11.....5.0 in/lbs.

5. All of the 6-32 UNC screws used in the sheet spring, clip-on ("Tinnerman") nuts.....5.0 to 6.0 in/lbs.

6. All of the thread cutting screws used in the plastic grills.....4.0 to 5.0 in/lbs.

7. All of the 6-32 screws in the crt mask.....5.0 in/lbs.

8. All of the 4-40 screws in the front drawer.....3.0 in/lbs.

9. Purity ring, convergence yoke clamp.....15.6 to 17.4 in/lbs.

Removing Modular Assemblies

Each modular assembly is mechanically connected to the mainframe by one or two 6-32 PNH screws on the top and bottom of each assembly and by a 4-40 PNH screw on the top mounting rail. Refer to Fig. 9-1 for the location of these mounting screws. A metal guide located on the mainframe chassis aligns the male edge card connector on the circuit boards with the female connector on the interconnect boards secured to the chassis. Other electrical connections are made to the assemblies by flat ribbon cable connectors or pin connectors which may be disconnected by removing the securing screws (if needed) and sliding the assemblies out to provide access. To lower the Video Amplifier, A13, remove the top center flat-head screw. To remove the Power Supply, A7, refer to "Power Supply A7 Removal".

NOTE

Always switch the POWER to OFF before removing any assembly.

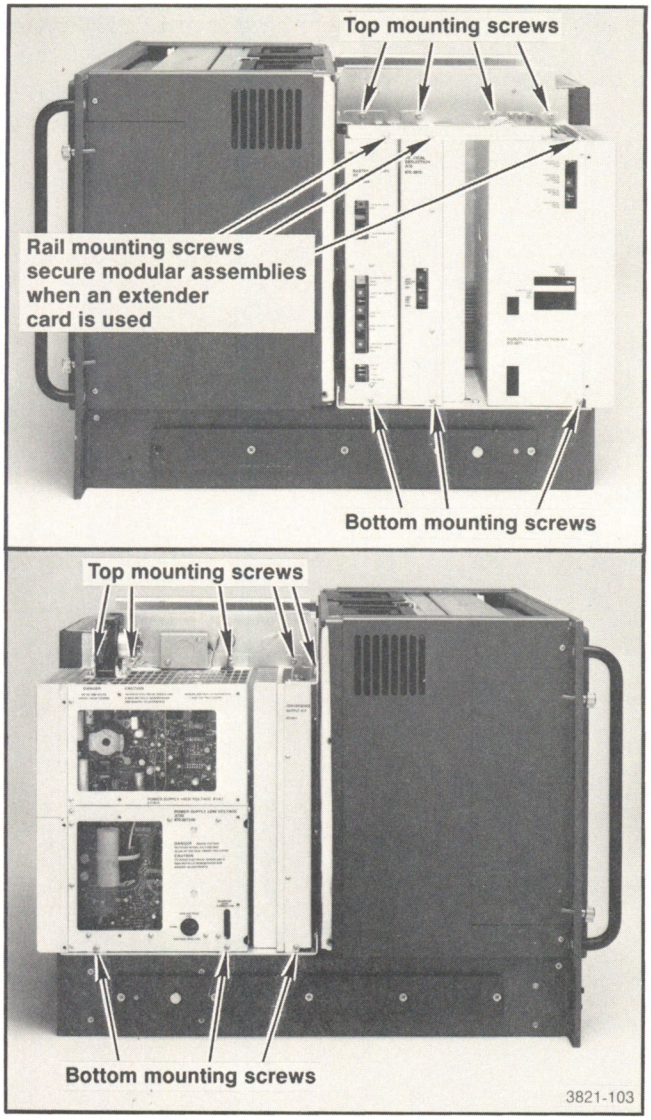

Fig. 9-1. Location of modular assemblies mounting screws.

Replacing Circuit Boards

Most of the circuit boards in the 690SR are mounted in modular assemblies. Besides being individually replaceable, all circuit boards in the 690SR are also available from Tektronix in higher level replaceable assemblies (listed in the Replaceable Electrical Parts list, Section 11). Consider this labor-saving alternative for complex assemblies such as Power Supply A7 and its major subassemblies; Low Voltage Power Supply A7A1 and High Voltage Power Supply A7A2, Front Control Drawer A8, Vertical Deflection A10, Horizontal Deflection A11, Video Amplifier A13, and Convergence Output A14. Contact the local Tektronix Field Office or representataive for pricing information. Procedures for removing the circuit boards in these modular assemblies are described in the following text. Figure 9-2 shows the location of the boards mentioned in this section of the manual.

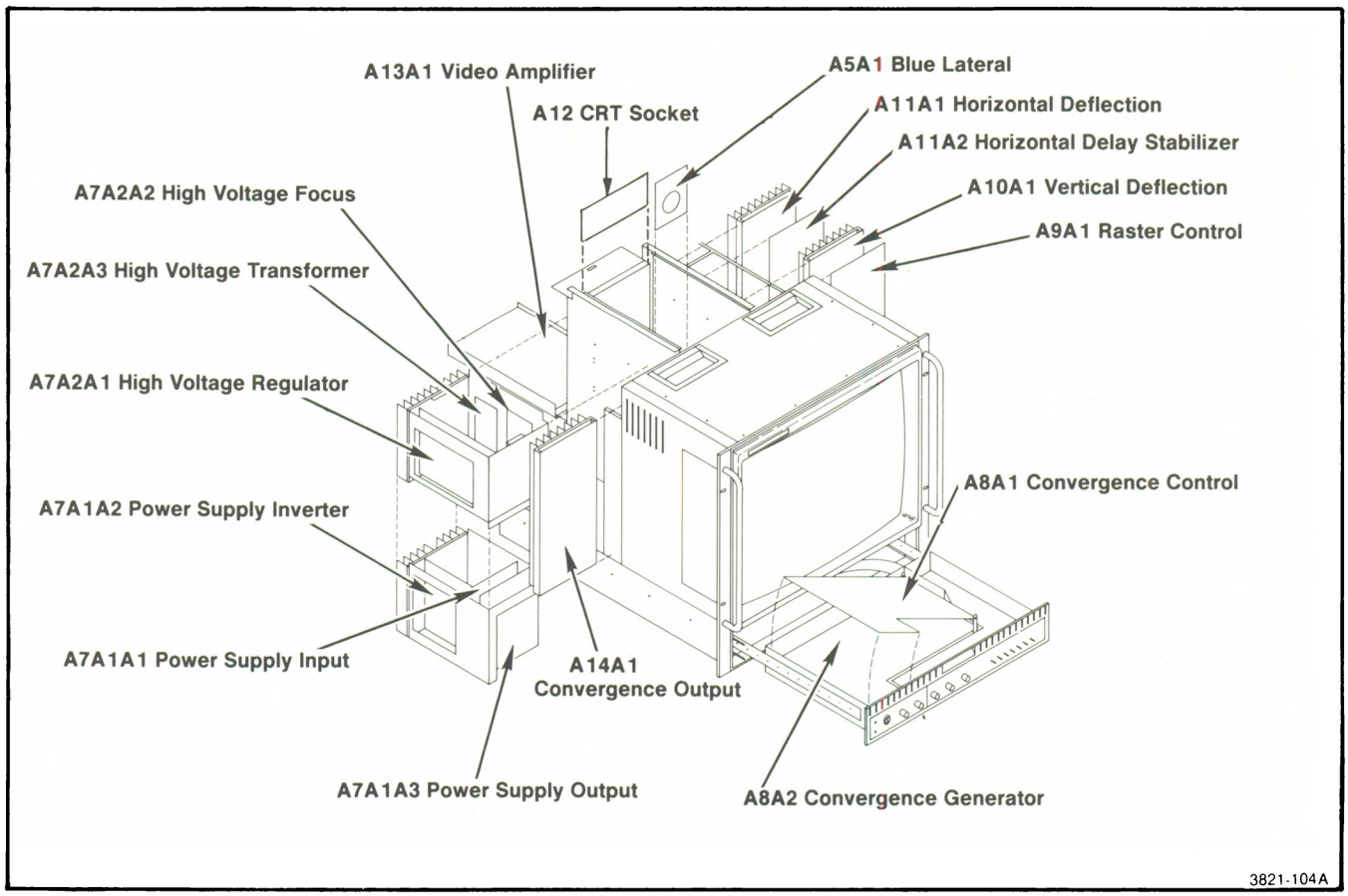

Fig. 9-2. Exploded view of 690SR modular assemblies.

NOTE

Some components in the 690SR have been either glued to a circuit board or glued together. If, for any reason, the components become detached from a circuit board or each other, reattach the component(s) using the recommended glue listed below:

Dow Corning 3145 RTV Adhesive/Sealent

Center Interconnect Board A1 Removal

Use this procedure to remove and replace the Center Interconnect board, A1.

1. Remove all the modular assemblies connected to the Right (A2) and Left (A3) Interconnect boards. Refer to "Removing Modular Assemblies" and "Power Supply A7 Removal," both in this section. Remove the interface module from the back of the 690SR.

2. Remove the twelve 4-40 PNH screws securing the Right and Left Interconnect boards to the chassis and unplug the boards from the Center Interconnect board, A1.

CAUTION

Using moderate force, grasp the Center Interconnect board with one hand and try to move it up and down. If the Center Interconnect board feels loose, DO NOT attempt to replace it. Call the local Tektronix Service Center or representative for information on repair. Alignment of the Center Interconnect board brackets require the use of a special tool and should only be done by qualified Tektronix service personnel.

3. Unplug the SMB connectors (P231, P431, and P631) and ribbon cable connectors (P216, P411, and P471) from the Center Interconnect board (through the interface module compartment). Remove the four 4-40 PNH screws securing the Center Interconnect board and pull the circuit board through the interface module compartment opening.

4. Replace and secure the new or repaired Center Interconnect board to the mounting brackets. Reconnect the Right and Left Interconnect boards to the Center Interconnect board.

5. Slide a rigid module extender card into the centermost modular assembly guide to align the Right Interconnect board, A2, vertically and laterally on the chassis. With the rigid modular extender card still in position, secure the Right Interconnect board to the chassis. Repeat step 5 to replace the Left Interconnect board, A3.

6. Replace the rest of the modular assemblies.

Right Interconnect Board A2 and Left Interconnect Board A3 Removal

Use this procedure to remove and replace the Right Interconnect board A2 and/or Left Interconnect board A3.

1. Remove all the modular assemblies on the side of the circuit board to be replaced. Refer to "Removing Modular Assemblies" and "Power Supply A7 Removal," both in this section of the manual.

2. Remove the Right Interconnect board via eight 4-40 PNH screws and/or the Left Interconnect board via four 4-40 PNH screws and unplug the board(s) from the Center Interconnect board, A1.

CAUTION

Using moderate force, grasp the Center Interconnect board with one hand and try to move it up and down. If the Center Interconnect board feels loose DO NOT attempt to replace the Left and/or Right Interconnect circuit board(s). Call the local Tektronix Service Center or representative for information on repair. Alignment of the Center Interconnect board brackets require the use of a special tool and should only be done by qualified Tektronix service personnel.

3. Reconnect the Right and/or Left Interconnect board(s) to the Center Interconnect board. Slide a rigid module extender card into the center most modular assembly guide to align the Right and/or Left Interconnect board(s) with the chassis. With the rigid modular extender card still in position, secure the Left and/or Right Interconnect board(s) to the chassis.

4. Replace all of the modular assemblies.

Power Supply A7 Removal

The disassembly of chassis-mounted components and board replacement instructions for the Power Supply assembly, A7, are divided under separate headings. Due to the complex structure of the Power Supply assembly, complete removal of a board or boards may not always be the best approach. Valuable time may be saved by first analyzing the construction of the assembly before attempting any disassembly. The exploded view drawings in the rear of the manual (Replaceable Mechanical Parts, Section 13) will be helpful.

To remove any circuit board or chassis mounted component from the Power Supply assembly, A7, it must first be removed from the mainframe. The following text provides information for Power Supply assembly removal and preparation for circuit board or component replacement. See Fig. 9-3.

NOTE

The names for the Power Supply boards may be partially abbreviated with PS for Power Supply, LV for Low Voltage, or HV for High Voltage in the following board removal procedures.

1. Turn the anode lead cap at P100 counterclockwise until it stops. Pull the anode lead straight out from P100; ground the contact end to the chassis and secure it there. Disconnect all of the other pin connectors and the focus connector from the Power Supply assembly.

2. Remove the five 6-32 PNH screws securing the Power Supply assembly to the mainframe. Remove the two wing nuts on the crt neck component side securing the Power Supply assembly to the mainframe. Disconnect the Power Supply assembly from the mainframe.

3. Remove the protective cover on the adjustment side of the module via eight 4-40 PNH screws.

4. Remove the five 4-40 PNH screws at the junction of the two supplies. Lift the HV Power Supply high enough to disconnect the multipin connectors from the Power Supply Output board, A7A1A3. Remove the HV Power Supply assembly from the LV Power Supply assembly.

Cooling Fan Assembly Removal

Use this procedure to remove and replace the cooling fan assembly.

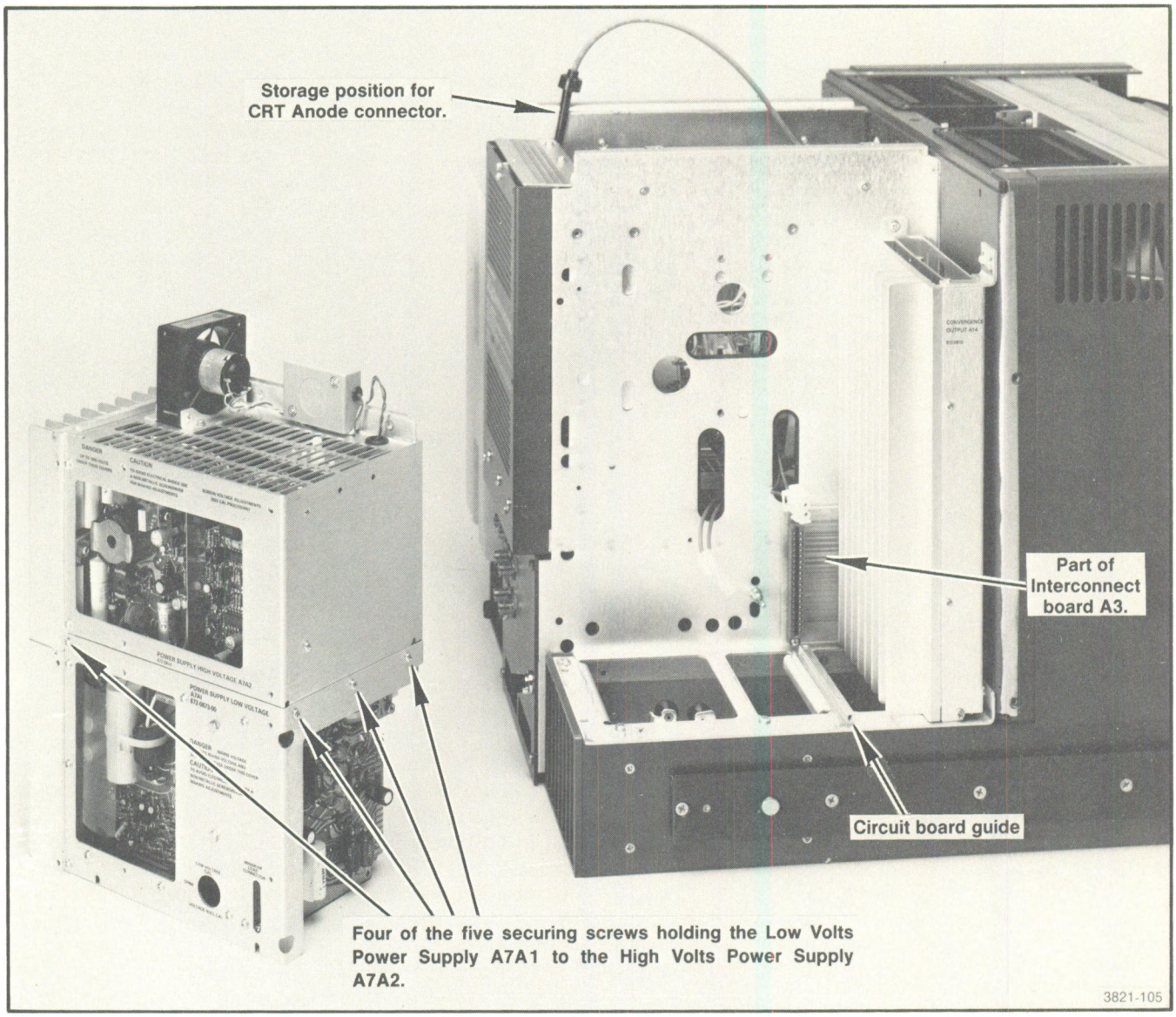

Fig. 9-3. Power Supply A7 shown removed from mainframe.

1. Remove the two 4-40 PNH and the 6-32 PNH screws securing the top cover to the Power Supply assembly, A7. Lift the top cover and disconnect the pin connectors from the Power Supply Output board, A7A1A3, with long-nose pliers.

2. Remove the cooling fan assembly from the top cover via two 4-40 PNH bolts through the fan case and two 4-40 PNH screws through the power converter.

Power Supply Input Board A7A1A1 Removal

Use this procedure to remove and replace the Power Supply Input board, A7A1A1.

1. Remove the Power Supply assembly, A7, from the mainframe by completing steps 1 through 4 of "Power Supply A7 Removal" in this section.

2. Remove the two 1/4 inch bolts and transformer clamp that secure T315 (between the PS Input Board, A7A1A1, and the PS Output Board, A7A1A3) to the wrap-around cover (see "Torque Specifications" in this section when reassembling the bolts to the transformer clamp). Remove the wrap-around cover from the Power Supply assembly, A7A1, via seventeen 4-40 PNH screws. Six of these screws connect the cover to the bottom vented cover, another six connect the cover to the finned heat sink, and five connect the cover to the nut blocks on the circuit boards.

3. Desolder transformer T315 from the PS Output board, A7A1A3. Desolder the 5-4 safety ground wire and the 8-01 (black cover) primary shield wire (next to the #13 terminal of T315) from the PS Output board. Desolder the solid wires A through D, +DC and −DC from the "U" shaped connectors on the PS Inverter board, A7A1A2. Use a pair of pliers to heat sink the wire between the "U" shaped connectors and the PS Output or PS Input boards.

CAUTION

Before resoldering T315 or the solid wire connectors to the PS Output board, it is necessary to replace the wrap-around cover on the LV Power Supply assembly and use the screw holes to align the PS Output board with the PS Input board.

4. Desolder the solid wires J through R from the PS Input board (do not lose the insulators on the K, M, O, and R wires). Remove the two 4-40 PNH screws securing the PS Output board to the PS Inverter board and lift the PS Output board away from the LV Power Supply assembly, A7A1.

NOTE

DO NOT pull the wires tight before resoldering the connections A through D, J through R, or +DC and −DC. Applying heat to the wire will cause it to expand and then contract as it cools. If the wires were pulled tight and then resoldered, the PS Output and/or PS Input boards would be bent due to the thermal characteristics of the metal wires. Therefore, a bend should be dressed in the wires to avoid stress on both the connections and circuit boards.

5. Desolder the ten wire connectors shown in Fig. 9-4. Remove the four 10-32 PNH screws securing the large electrolytic capacitors C329 and C439 to the PS Input board. Remove the two 4-40 PNH screws securing the PS Input board to the PS Inverter board and lift the PS Input board away from the assembly.

NOTE

Capacitors C329 and C439 are not a part of the PS Input board. They can be ordered individually if needed.

6. Desolder and remove transformer T315 from the PS Input board.

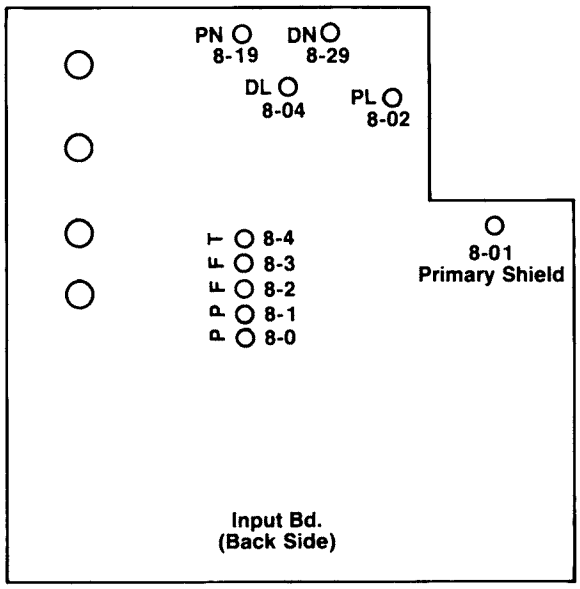

3821-106

Fig. 9-4. Wire connections to the Power Supply Input board, A7A1A1.

7. Reverse this procedure to replace the PS Input board. Observe the caution following step 3.

Power Supply Inverter Board A7A1A2 Removal

Use this procedure to remove and replace the Power Supply Inverter board.

1. Remove the Power Supply, A7, from the mainframe by completing steps 1 through 4 of "Power Supply A7 Removal" in this section.

2. Remove the two 1/4 inch bolts and transformer clamp that secure T315 (between the PS Input board, A7A1A1, and the PS Output board, A7A1A3) to the wrap around cover (see "Torque Specifications" in Section 8 when reassembling the bolts to the transformer clamp). Remove the wrap-around cover from the LV Power Supply, A7A1, via seventeen 4-40 PNH screws. Six of these screws connect the cover to the bottom vented cover, another six connect the cover to the finned heat sink, and five connect the cover to the nut blocks on the circuit boards.

3. Desolder the gray base wire from (B), the red base wire from (C), the 8-1 wire from (P), and the 8-4 wire from (T) on the PS Inverter board.

4. Desolder the solid wire connectors A through D, +DC, and −DC from the "U" shaped connectors on the PS Inverter board. (Use a pair of pliers to heat sink the wire between the "U" shaped connectors and the PS Output or PS Input boards.)

5. Loosen the bar clamp screws to their limit (without removing the bar clamp) that secure the switching transistors to the finned heat sink. (See "Torque Specifications" in this section when reassembling the bar clamp onto the switching transistors.) Remove the two 4-40 PNH screws securing the shield (E390) from the finned heat sink (these screws are located behind the line voltage tag).

6. Remove the four 4-40 PNH screws from the PS Inverter board that connect to the PS Output and PS Input boards. Remove the two 4-40 PNH screws securing the PS Inverter board to the finned heat sink.

7. With the finned heat sink laying on a flat surface, tilt the rest of the assembly to allow enough access to remove the PS Inverter board.

8. Reverse this procedure to replace the PS Inverter board.

Power Supply Output Board A7A1A3 Removal

Use this procedure to remove and replace the Power Supply Output board.

1. Remove the Power Supply, A7, from the mainframe by completing steps 1 through 4 of "Power Supply A7 Removal" in this section.

2. Remove the two 1/4 inch bolts and transformer clamp that secure T315 (between the PS Input board, A7A1A1, and the PS Output board, A7A1A3) to the wrap around cover (see "Torque Specifications" in this section when reassembling the bolts to the transformer clamp). Remove the wrap around cover from the LV Power Supply, A7A1, via seventeen 4-40 PNH screws. Six of these screws connect the cover to the bottom vented cover, another six connect the cover to the finned heat sink, and five connect the cover to the nut blocks on the circuit board.

3. Desolder transformer T315 from the PS Output board. Desolder the 5-4 safety ground wire and the 8-01 (black cover) primary shield wire (next to the #13 terminal of T315) from the PS Output board. If a component on the PS Output board is to be replaced, go to step 4. If the PS Output board itself is to be replaced, go to step 5.

CAUTION

Before resoldering T315 or the solid wire connectors to the PS Output board, it is necessary to replace the wrap-around cover on the LV Power Supply assembly and use the screw holes to align the PS Output board with the PS Input board.

4. If possible, desolder the component to be replaced at this time. Desolder the solid wire connectors A through D from the "U" shaped posts on the PS Inverter board, A7A1A2. (Use a pair of pliers to heat sink the wire between the "U" shaped connector and the PS Output board.) Remove the two 4-40 PNH screws securing the PS Output board to the PS Inverter board. The solid wire connectors J through R may remain connected while lifting the PS Output board up and over to allow access to a component connection. Replace the PS Output board by reversing this procedure and reading the NOTE at the end of these steps.

5. Desolder the solid wire connectors A through D and J through R from the PS Output board. (Use a pair of pliers as a heat sink just beneath each connector to prevent melting either the insulation on J through R or the "U" shaped connections A through D on the PS Inverter board.) Remove the two 4-40 PNH screws securing the PS Output board to the PS Inverter board and lift the PS Output board away from the assembly.

NOTE

DO NOT pull the solid wires tight before resoldering the connections A through D or J through R to the PS Output board. Applying heat to the wire will cause it to expand and then contract as it cools. If the wires were pulled tight and then resoldered, the PS Output and/or PS Input boards would be bent due to the thermal characteristics of the metal wires. Therefore, a bend should be dressed in the wires to avoid stress on both the connections and circuit boards.

6. To replace the PS Output board, reverse this procedure. Observe the caution following step 3.

Switching Transistors Q205 and Q305 Removal

Use this procedure to remove and replace the switching transistors (Q205 and Q305) from the PS Inverter board, A7A1A2.

1. Remove the Power Supply, A7, from the mainframe by completing steps 1 through 4 of "Power Supply A7 Removal" in this section.

2. Remove the two 1/4 inch bolts and transformer clamp that secure T315 (between the PS Input board, A7A1A1, and the PS Output board, A7A1A3) to the wrap-around cover (See "Torque Specifications" in this section when reassembling the bolts to the transformer clamp.) Remove the wrap around cover from the LV Power Supply, A7A1, via seventeen 4-40 PNH screws. Six of these screws connect the cover to the bottom vented cover, another six connect the cover to the heat sink, and five connect the cover to the nut blocks on the circuit boards.

3. Loosen the bar clamp screws to their limit (without removing the bar clamp) that secure the switching transistors to the finned heat sink. (See "Torque Specifications" in this section when reassembling the bar clamp onto the switching transistors.) Remove the two 4-40 PNH screws securing the shield (E390) from the finned heat sink (these screws are located behind the line voltage tag). Remove the two 4-40 PNH screws securing the PS Inverter board, A7A1A2, to the finned heat sink.

4. With the finned heat sink laying on a flat surface, tilt and pull the rest of the assembly away from the finned heat sink. Note the approximate distance of the switching transistor body to the surface of the circuit board, replace the switching transistor, and position the new component accordingly. Reverse this procedure to reassemble the LV Power Supply.

Transformer T315 Removal

Use this procedure to remove and replace the transformer, T315.

NOTE

Transformer T315 is not a part of any circuit board assembly and must be ordered individually.

1. Remove the Power Supply, A7, from the mainframe by completing steps 1 through 4 of "Power Supply A7 Removal" in this section.

2. Remove the two 1/4 inch bolts and transformer clamp that secure T315 (between the PS Input board, A7A1A1, and the PS Output board, A7A1A3, to the wrap-around cover (see Torque Specifications in this section when reassembling the bolts to the transformer clamp). Remove the wrap around cover from the LV Power Supply via seventeen 4-40 PNH screws. Six of these screws connect the cover to the bottom vented cover, another six connect the cover to the finned heat sink, and five connect the cover to the nut blocks on the circuit boards.

3. Desolder T315 from the PS Output board. Desolder the 5-4 safety ground wire and the 8-01 (black cover) primary shield wire (next to the #13 terminal of T315) from the PS Output board. Desolder the solid wire connectors A through D, +DC, and −DC from the "U" shaped connectors on the PS Inverter board, A7A2A2. (Use a pair of pliers to heat sink the wire between the "U" shaped connectors and the PS Output or PS Input boards.) Desolder the solid wire connections J through R from the PS Output board (do not lose the insulators on the K, M, O, and R wires).

CAUTION

Before resoldering T315 or the solid wire connectors to the PS Output board, it is necessary to replace the wrap around cover on the LV Power Supply assembly and use the screw holes to align the PS Output and PS Input boards.

NOTE

DO NOT pull the wires tight before resoldering the connections A through D. Applying heat to the wire will cause it to expand and then contract as it cools. If the wires were pulled tight and then resoldered, the PS Output board and/or PS Input board would be bent due to the thermal characteristics of the metal wires. Therefore, a bend should be dressed in the wires to avoid stress on both the connections and circuit boards.

4. Remove the two 4-40 PNH screws securing the PS Output board to the PS Inverter board and lift the PS Output board away from the assembly. Remove the four 10-32 UNC screws securing the large electrolytic capacitors C329 and C439 to the PS Input board. Remove the two 4-40 PNH screws securing the PS Input board to the PS Inverter board and lift the PS Input board to the side of the assembly. Desolder T315 from the PS Input board.

5. Reverse this procedure to replace the transformer, T315. Observe the caution following step 3.

High Voltage Regulator Board A7A2A1 Removal

Use this procedure to remove and replace the High Voltage Regulator Board, A7A2A1.

1. Remove the Power Supply, A7, from the mainframe by completing steps 1 through 3 of "Power Supply A7 Removal" in this section. Disconnect P116 (fan power leads) from J115 pins 2 and 3 on the Power Supply Output board, A7A1A3.

2. Desolder the gray (connected to CS) and the white (connected to FB) wires at the High Voltage Regulator board. Remove all of the multipin connectors at the High Voltage Regulator board (P128, P130, P150, P209, and P509).

NOTE

The CS and FB wires need not be desoldered and the multipin connectors can be left connected if the HV Regulator board is to be put in the service position.

3. Remove the 4-40 PNH screw that goes through the High Voltage Regulator board and a plastic spacer securing the High Voltage Transformer assembly. The head of the screw is located next to T315 on the High Voltage Regulator board.

4. Remove the 4-40 PNH screw located between the large heat sink fins securing the small heat sink block for Q304 (on the High Voltage Regulator board) to the larger heat sink.

5. Remove the four 4-40 PNH screws securing the High Voltage Regulator board to the wrap-around cover and the large finned heatsink. Lift the High Voltage Regulator board through the top of the Power Supply.

6. Reverse this procedure to replace the High Voltage Regulator board.

High Voltage Focus Board A7A2A2 Removal

Use this procedure to remove and replace the HV Focus board, A7A2A2.

1. Remove the Power Supply, A7, from the mainframe by completing steps 1 and 2 of "Power Supply A7 Removal" in this section. Remove the top cover from the High Voltage Power Supply via two 4-40 PNH screws securing it to the wrap around cover. Disconnect P116 (fan power leads) from J115 pins 2 and 3 on the Power Supply Output board, A7A1A3.

2. Disconnect the 8.33 kV lead P101 from J101, which is located on the High Voltage Transformer assembly, A7A2A3.

3. Remove the three 4-40 PNH screws securing the HV Focus board to the wrap-around cover and lift the HV Focus board through the top of the power supply. Remove the multipin connectors (P241, P251, and P261) at the HV Focus board.

4. Reverse this procedure to replace the HV Focus board.

High Voltage Transformer Assembly A7A2A3 Removal

Use this procedure to remove and replace the High Voltage Transformer assembly, A7A2A3.

1. Remove the Power Supply, A7, from the mainframe by completing steps 1 through 4 of "Power Supply A7 Removal" in this section. Disconnect P116 (fan power leads) from J115 pins 2 and 3 on the Power Supply Output board, A7A1A3.

2. Disconnect the 8.33 kV lead P101 from J101, which is located on the High Voltage Transformer assembly. Disconnect multipin connector P128 from J128 on the High Voltage Regulator board, A7A2A1. Desolder the gray (connected to CS) and white (connected to FB) wires at the High Voltage Regulator board.

3. Remove the two 4-40 PNH screws located between the large heat sink fins securing the High Voltage Transformer assembly mount to the heat sink.

4. Remove the 4-40 PNH screw that goes through the High Voltage Regulator board and a plastic spacer securing the High Voltage Transformer assembly. The head of the screw is located next to T315 on the High Voltage Regulator board.

5. Remove the two 4-40 PNH screws securing the High Voltage Transformer assembly mount to the wrap around cover and pull A7A2A3 through the bottom of the High Voltage Power Supply, A7A2.

6. Reverse this procedure to replace the High Voltage Transformer assembly, A7A2A3.

Convergence Control Board A8A1 and Convergence Generator Board A8A2 Removal

Use this procedure to remove and replace the Convergence Control board, A8A1, and/or the Convergence Generator board, A8A2.

1. Remove the ribbon cable connectors P270 and P470 and the multipin connector P827 from the Convergence Control board. Remove the five 4-40 PNH screws securing the Convergence Control board to the stand-off posts (not the two screws connected to the hinge). Move the circuit board to the vertical position and, from the bottom of the Convergence Control board, remove the seven 4-40 PNH screws securing the Convergence Control Panel and lift the panel away from the circuit board.

2. Remove the 1/4-inch nut and 4-40 PNH screw from the hinged brace which connects to the Convergence Control board. Fold the Convergence Control board back on top of the stand-off posts and remove the two 4-40 PNH screws connected to the hinge. Remove the Convergence Control board. Continue to step (3) to remove the Convergence Generator board.

3. Turn the BLACK LEVEL and CONTRAST controls on the drawer front panel to their preset position. Remove both of these control knobs using a 1/16-inch allen wrench. Remove the two 5/16-inch nuts securing R825 and R833 to the drawer's front panel.

4. Remove the six 3/16-inch stand-off posts securing the Convergence Generator board to the drawer chassis. Remove the two 4-40 PNH screws from the heatsink tabs of U590 and U593. Remove the two remaining 4-40 PNH screws securing the Convergence Generator board to the drawer chassis. Remove the Convergence Generator board.

5. Reverse this procedure to replace the Convergence Generator, A8A2, and/or the Convergence Control Board, A8A1.

Raster Control Board A9A1 Removal

Use this procedure to remove and replace the Raster Control board, A9A1.

1. Remove the Raster Control assembly, A9, from the mainframe.

2. Remove the cover from the assembly via five 4-40 UNC screws.

3. Remove the 4-40 PNH screws connecting the Raster Control board to the nut blocks.

4. Reverse this procedure to replace the Raster Control board.

Vertical Deflection Board A10A1 Removal

Use this procedure to remove and replace the Vertical Deflection board, A10A1.

1. Unplug the vertical yoke connector from the Vertical Deflection assembly, A10, and remove the assembly from the mainframe.

2. Remove the cover from the assembly via four 4-40 PNH screws.

3. Remove the 4-40 PNH screws connecting the Vertical Deflection board and transistors Q130, Q223, Q243, Q727, Q747, and integrated circuits U834 and U842 to the heatsink.

4. Reverse this procedure to replace the Vertical Deflection board.

Horizontal Deflection Board A11A1 and Horizontal Delay Stabilizer Board A11A2 Removal

Use this procedure to remove and replace the Horizontal Deflection board, A11A1, and/or the Horizontal Delay Stabilizer board, A11A2.

1. Unplug the horizontal yoke connector from the Horizontal Deflection assembly, A11, and remove the assembly from the mainframe.

2. Remove the cover from the assembly via five 4-40 UNC screws.

3. Disconnect the multipin connectors from the Horizontal Delay Stabilizer board.

4. Remove A11A2 via four 4-40 PNH screws. Reverse steps 1 through 4 to replace the Horizontal Delay Stabilizer board, A11A2.

5. Remove the two 4-40 PNH screws securing the horizontal yoke connector, J210, to the heatsink.

6. Remove the 4-40 PNH screws connecting the Horizontal Deflection board and transistors Q133, Q210, Q121, and Q230 to the heatsink. Also remove the two 2-56 PNH screws connecting transistors Q440 and Q442 to the heat sink.

7. Remove the transistor cover and collector securing screws from Q330 and Q920 on the finned side of the heatsink. SAVE THE SHOULDER WASHERS OF THE TRANSISTOR LEADS.

8. Remove the Horizontal Deflection board via two 4-40 UNC screws and four stand off posts.

9. Reverse this procedure to replace the Horizontal Deflection board, A11A1, and the Horizontal Delay Stabilizer board, A11A2.

Crt Socket Board A12 Removal

Use this procedure to remove the CRT Socket Board. The CRT Socket board and crt socket are removed together, as an assembly.

1. Fold down the A13 assembly, housing the Video Amplifier board, to a horizontal position by removing the one screw at the top of the assembly.

2. Remove the four screws securing the crt neck component shield from the mainframe and lift off the shield. Unplug the focus connector (P260) from the High Voltage Focus board, A7A2A2, the filament connector (P330) from the Low Voltage Output board, A7A1A3, and the screen grid connector (P250), also from A7A2A2. Disconnect P500, P525, and P535 from the bottom edge of the CRT Socket board. Disconnect the crt socket. Unsolder the black ground wire next to P525 pin 1 from the CRT Socket board. Remove the four 4-40 PNH screws securing the CRT Socket board to the chassis. Pull the CRT Socket board forward until the board-mounted components clear the chassis. Then, lift the board and crt socket up and out of the instrument, carefully guiding the wires and crt socket through the top chassis opening.

3. Reverse this procedure to replace the CRT Socket board and crt socket.

Video Amplifier Board A13A1 Removal

1. The assembly housing the Video Amplifier, A13A1, board folds down to a horizontal position by removing the one screw at the top of the assembly.

2. Fold the assembly down and locate the three transistors mounted on heatsinks (Q291, Q491, Q691). Move the assembly back to the vertical position and remove the three 6-32 PNH screws securing the transistor heatsinks. Move the assembly back to the horizontal position and remove the two 6-32 PNH screws securing the bar clamp to U101, U120, and U121.

3. Remove the four 4-40 PNH screws securing the circuit board. Remove the multipin connectors (P290, P490, and P690), SMB connectors (P230, P430, and P630), and ribbon cable connector P215 from the Video Amplifier board.

NOTE

The ribbon cable that connects to J215 on the Video Amplifier board is separated into three groups of wire. When replacing the Video Amplifier board this ribbon cable must be routed around both sides of the SMB connector, P230, in order for the circuit board to lay flush against the board mounts.

4. Reverse this procedure to replace the Video Amplifier board.

Convergence Output Board A14A1 Removal

Use this procedure to remove and replace the Video Amplifier board, A14A1.

1. Unplug the convergence yoke assembly connectors from the Convergence Output assembly, A14, and remove the assembly from the mainframe.

2. Remove the cover from the assembly via four 4-40 UNC screws.

3. Remove the 4-40 PNH screws connecting the Convergence Output board and transistors Q225, Q245, Q425, Q445, Q525, Q625, Q825, Q845, and integrated circuits U925, U933, and U947 to the heatsink.

4. Reverse this procedure to replace the Convergence Output board, A14A1.

Picture Tube (CRT) Replacement

The following procedure provides information for picture tube (crt) removal and replacement.

WARNING

Use care when handling the crt. Protective clothing and safety glasses should be worn. Avoid striking it on any object that might cause it to crack or implode. When storing the crt, place it in a protective carton or set it face down in a protected location on a smooth surface with a soft mat under the face to protect it from scratches.

When working around or directly with the crt, adequate electrical safety precautions need to be strictly observed. ALWAYS discharge to chassis ground the high voltage anode lead before removing the crt or Power Supply assembly. High voltage can exist even if the crt has not been operating for several days. Discharge the crt by disconnecting the high voltage lead at the high voltage power supply connection to T100 and touching the contact end to the chassis.

1. Remove the front and back outside dust cover from the chassis. Remove the top plate portion of the crt neck shield.

2. Remove the rackmount handles connected to the front bezel and mainframe chassis.

3. (This step assumes that the interface module has an interface module Control assembly mounted in the front drawer of the 690SR. If it does not, go to step 4.) Open the front drawer and disconnect the multipin connector on the Control board. Remove the Control board via the seven 4-40 PNH screws and pull the interface module Control board and its panel assembly through the drawer front.

4. Remove the drawer from the slide mounts via four 4-40 PNH screws and set the drawer on its side to the right of the 690SR. Remove the two ribbon cable brace screws from the bottom of the drawer. Remove the ribbon cable brace via the four remaining 4-40 PNH screws and unplug the ribbon cables from the circuit boards. Set the drawer to the side.

5. Remove the front bezel via ten 4-40 UNC screws.

6. Disconnect the crt anode lead from the high voltage transformer, T100, by grasping the insulated cap and turning it counterclockwise until it stops. Then, pull the anode lead straight out. DO NOT touch the end of the anode lead. Ground the contact end to the chassis, and secure it there. Refer to Fig. 9-5 to help identify the crt neck connectors and securing bolt locations.

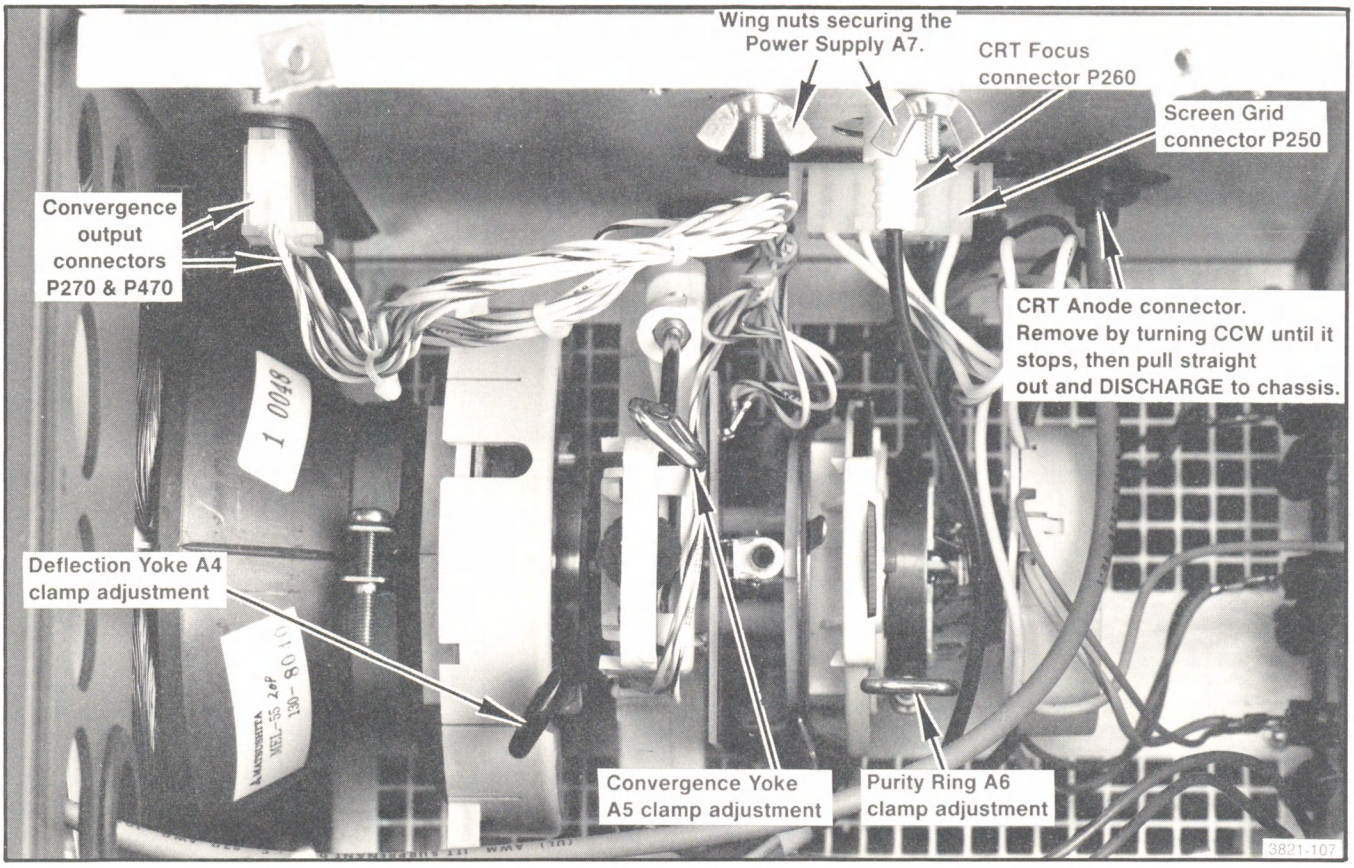

Fig. 9-5. CRT neck compartment connectors and securing components.

7. Unplug the focus connector, P260, from the High Voltage Focus board, A7A2A2; the filament connector, P330, from the Power Supply Output board, A7A1A3; and the screen grid connector, P250, from A7A2A2. Disconnect the crt socket. Unplug the multipin connectors P525, P535, and P500 from the CRT Socket board. Desolder the black ground wire next to P525 pin #1 from the CRT Socket board. Remove the four 4-40 PNH screws securing the CRT Socket board to the chassis. Pull the CRT Socket board forward away from the mainframe, carefully guiding the wires and crt socket through the top chassis opening. Note the location and the orientation of the crt neck component assemblies. Loosen the Purity Ring assembly, A6, clamp and slide it off the end of the crt. Disconnect the Convergence Yoke assembly, A5, pin connectors from the Convergence Output assembly and remove A5 from the neck of the crt. Disconnect the Deflection Yoke assembly, A4, leads from the Horizontal Deflection assembly, A11, and the Vertical Deflection assembly, A10.

NOTE

It is recommended that two people participate in the removal and replacement of the crt. Although one person is capable of accomplishing this task, the degree of efficiency gained, and the lessened odds of an accident occurring warrant the use of two people.

8. The crt should now be free of all connections and ready to be removed. Remove the two bottom crt retaining screws with a 3/16-inch hex driver or allen wrench. Standing in front of the crt face, brace the top of the crt with the palm of the hand and remove the two top crt retaining screws. Carefully remove the crt through the front of the mainframe. Lay the crt face down on a soft pad.

9. Loosen the back and front retaining clamps of the deflection yoke. Remove the deflection yoke from the crt.

10. With the anode button of the new crt facing you, slide the deflection yoke onto the neck of the crt until it stops at the flange. Align the seam of the deflection yoke with the anode button (see Fig. 9-6). Make sure the rear clamp tensioner is on the same side as the anode button and adjust the clamp for a snug fit.

NOTE

When replacing the Convergence Yoke assembly onto the crt neck, it is nessary to adjust the three ferrite slugs on the Blue Lateral board to a position where they just touch the glass of the crt. Slip the Convergence Yoke assembly onto the crt neck and rotate the assembly to provide access to each ferrite slug; adjust each in accordance to the previous statement.

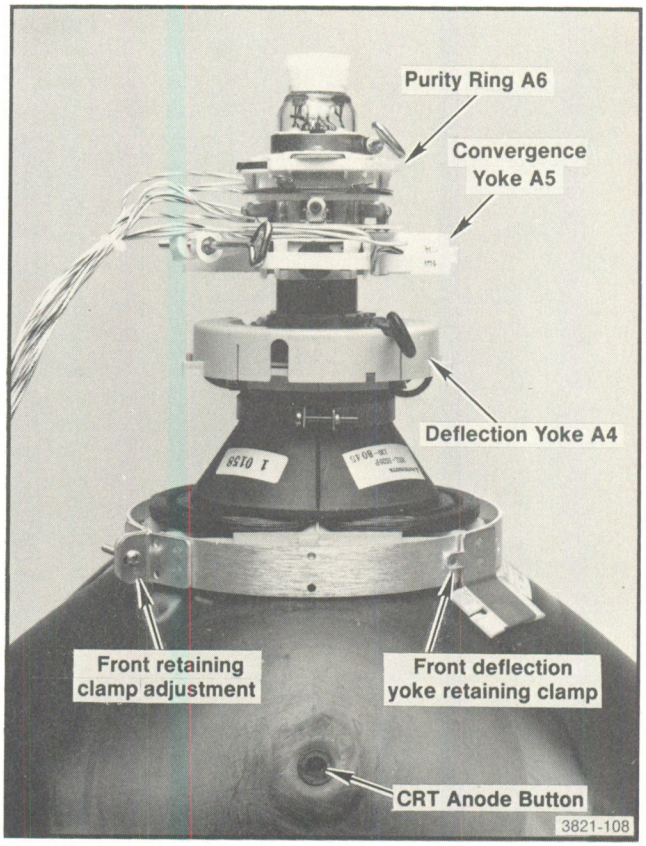

Fig. 9-6. Orientation of crt neck components. Note placement of the deflection yoke (in full forward position for calibration) and alignment of components to the anode button.

11. On the mainframe, loosen the three top and bottom crt slide mounting brackets and slide them towards the back of the mainframe. The location of these brackets is shown in Figs. 9-7 and 9-8. Carefully guide the new crt into the mainframe. Secure the crt to the slide mounting brackets to a degree that allows the crt to move within the tolerances of the crt mounting braces. Secure the bezel to the front of the mainframe with the top and bottom two screws on each side. Slide the crt forward so the face of the crt is uniformly spaced 1/8-inch from the surface of the bezel, and secure the top and bottom crt slide mounts.

Align the crt so the end lines of the phosphor dots cannot be seen. This is accomplished by reaching through the drawer opening and applying pressure to the bottom of the crt, moving it within the tolerances of the mounting braces. Once a position has been chosen, tighten the top two mounting brace screws with an "L" shaped 3/16-inch allen wrench. Remove the bezel and tighten the bottom two mounting brace screws. Replace the bezel with all the securing screws. Loosen the top and bottom crt slide mounting brackets and move the crt forward until the face is uniformly flush with the surface of the bezel. The end line of the phosphor dots should not be visible.

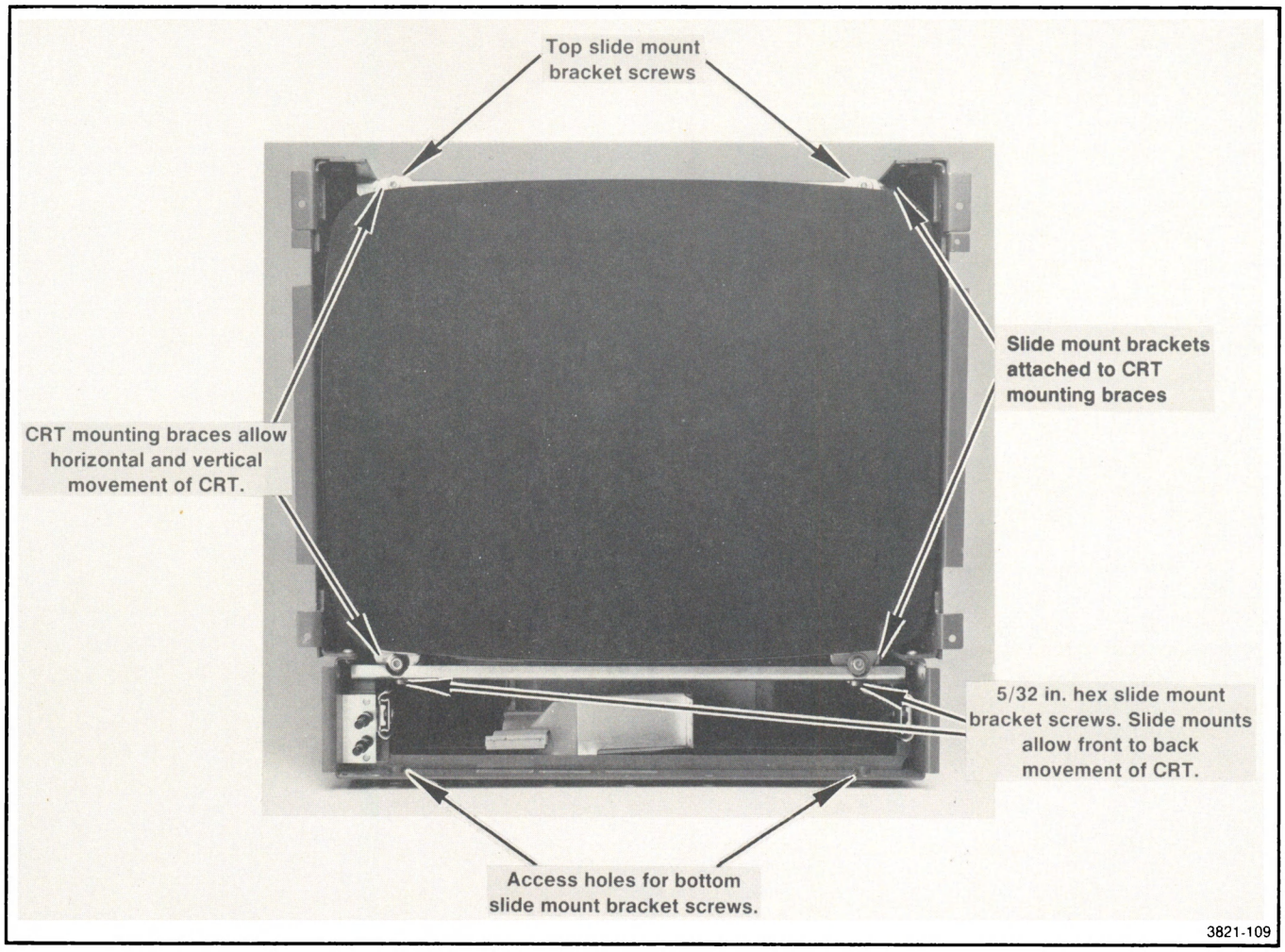

Fig. 9-7. CRT replacement adjustment locations.

12. Remove the anode connector from the old crt. Apply a ring coat of "Dow Corning 4 Compound" (a silicone dielectric that meets the military specification MIL-S-8660B, AMED.3) to the crt side of the connector. Install the anode connector on the new crt.

13. Except for step 5, reverse the order of steps 1 through 7 of this procedure to complete the crt replacement.

14. Perform steps 11, 12, 20 through 23, 25, 33, and 34 of the Adjustment Procedure in Section 7.

Deflection Yoke A4 Replacement

The following procedure provides information for the deflection yoke removal and replacement.

1. Remove the front and back outside dust covers from the chassis. Remove the top plate portion of the crt neck shield.

2. Remove the screw securing the assembly housing the Video Amplifier board and fold the assembly down to a horizontal position. Unplug the focus connector, P260, from the High Voltage Focus board, A7A2A2; the filament connector, P330, from the Power Supply Output board, A7A1A3; and the screen grid connector, P250, from A7A2A2. Unplug multipin connectors P500, P525, and P535 from the CRT Socket board. Desolder the black ground wire next to P525 pin #1 on the CRT Socket board. Remove the four 4-40 PNH screws securing the CRT Socket board to the chassis. Unplug the crt socket. Pull the CRT Socket board forward away from the mainframe, carefully guiding the wires and crt socket through the top chassis opening.

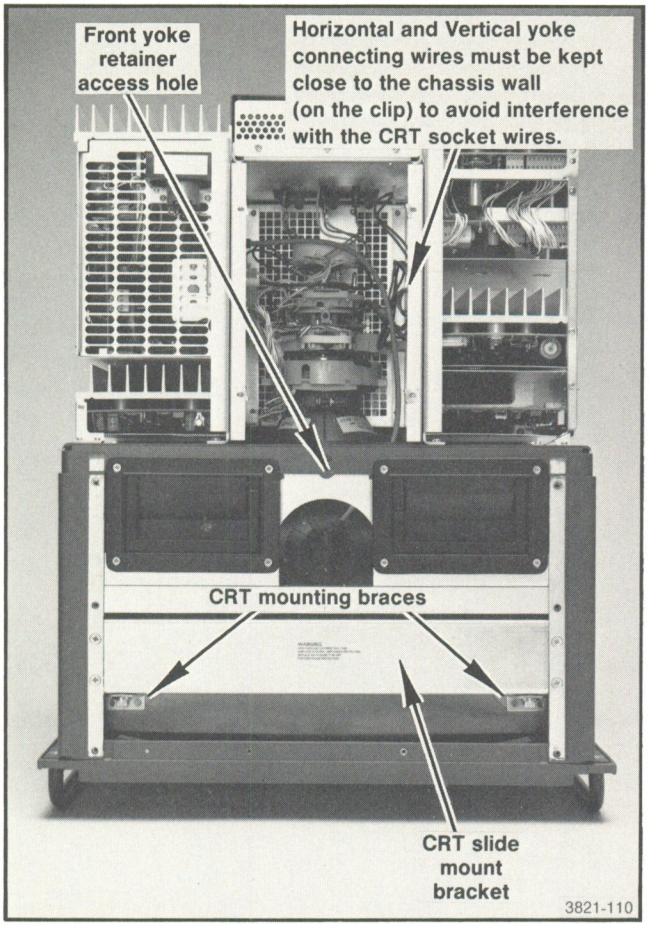

Fig. 9-8. Points of interest: Top View.

NOTE

A dummy crt socket should be installed to protect the crt pins. If one is not available, extra care should be exercised when removing all crt neck components.

3. Disconnect the crt anode lead from the high voltage transformer, T100, by grasping the insulated cap and turning it counterclockwise until it stops. Then, pull the anode lead straight out. DO NOT touch the end of the anode lead. Ground the contact end of the anode to the chassis and secure it there.

4. Note the location and the orientation of the crt neck component assemblies. Loosen the Purity Ring assembly, A6, clamp and slide it off the end of the crt. Disconnect the Convergence Yoke assembly, A5, pin connectors from the Convergence Output assembly and remove A5 from the crt.

NOTE

When replacing the Convergence Yoke assembly onto the crt neck, it is necessary to adjust the three ferrite slugs on the Blue Lateral board to a position where they just touch the glass of the crt. Slip the Convergence Yoke assembly onto the crt neck and rotate the assembly to provide access to each ferrite slug; adjust each in accordance to the previous statement.

5. Disconnect the Deflection Yoke pin connectors from the Horizontal and Vertical Deflection assemblies. With a non-magnetic screwdriver, loosen the front and back deflection yoke retaining clamps. Remove the deflection yoke from the crt.

6. Install the new deflection yoke by reversing the order of the removal procedure.

NOTE

Perform the Horizontal Deflection, A11A1, Precalibration in this section along with steps 11, 12, 20 through 23, 25, 33, and 34 of the Adjustment Procedure in Section 7.

Convergence Yoke Assembly A5 and Blue Lateral Board A5A1 Removal

Use this procedure to remove and replace the Convergence Yoke assembly, A5, and the Blue Lateral board, A5A1.

1. Remove the four screws securing the crt neck component shield. Note the position of the Purity Ring, A6, and the Convergence Yoke assembly using a felt tip marker. Unplug the crt socket; loosen the Purity Ring clamp and slide it off the end of the crt neck. Disconnect the Convergence Yoke pin connectors from the Convergence Output assembly, loosen the clamp, and remove the assembly from the end of the crt neck. Remove the Blue Lateral board from the Convergence Yoke assembly via two 4-40 PNH screws, only if A5A1 is to be replaced.

NOTE

When replacing the Convergence Yoke assembly onto the crt neck, it is necessary to adjust the three ferrite slugs on the Blue Lateral board to a position where they just touch the glass of the crt. Slip the Convergence Yoke assembly onto the crt neck and rotate the assembly to provide access to each ferrite slug; adjust each in accordance to the previous statement.

2. Reverse this procedure to replace the Convergence Yoke assembly, A5, and the Blue Lateral board, A5A1. After the new component(s) or assembly has been replaced, complete step 12 of the Adjustment Procedure in Section 7.

Purity Ring A6 Removal

Use this procedure to remove and replace the Purity Ring, A6.

1. Remove the four screws securing the crt neck component shield. Note the position of the Purity Ring using a felt tip marker. Unplug the crt socket; loosen the Purity Ring and slide it off the end of the crt neck. Reverse the sequence of this step to replace the Purity Ring, A6.

2. After replacing the Purity Ring with a new assembly, complete step 12 of the Adjustment Procedure in Section 7.

SPECIAL PRECALIBRATION PROCEDURES

Horizontal Deflection Board A11A1 Precalibration

NOTE

Precalibration of the Horizontal Deflection board, A11A1, is required if either the Horizontal Output transistor, Q330, or the Deflection Yoke, A4, is replaced.

The precalibration procedure provides steps for checking proper circuit operation and a calibration procedure for setting a −3.4 A yoke current limit throughout the horizontal sweep rate range.

1. After the defective components are replaced, prepare the Horizontal Deflection assembly, A11, for precalibration.

a. Note the original positions of the 'S' Capacitors. Move all 'S' Capacitor Select jumpers on the Horizontal Delay Stabilizer board, A11A2, to the set of pins closest to the capacitors (J105 pins 1 & 2; J205A, J205B, and J405 pins 1 through 4; J505 pins 1 through 6).

b. Remove the four 4-40 PNH screws securing the Horizontal Deflection board to the stand-off posts. Swing the Horizontal Deflection board out of the way without removing the multipin connectors (brace the multipin connectors on the Horizontal Deflection board to avoid bending the pin connections on the circuit board). Remove the two stand-off posts next to TP546 and J110 on the Horizontal Deflection board. Relocate the stand-off posts on the finned side of the heat sink directly opposite of their original location. Secure the Horizontal Deflection Stabilizer board to the stand-off posts on the finned side of the heat sink (with the components facing the heat sink).

c. Reconnect the Horizontal Deflection assembly to the mainframe using the rigid module extender card. Use one of the screws to attach the top of the assembly to the retaining bar. DO NOT reconnect the yoke.

d. Turn the Horizontal Size control (R925 in the drawer on the Convergence Control board, A8A1) three-fourths of its range clockwise.

e. On the Horizontal Deflection board, set the following adjustments and jumpers as indicated.

R620	Horizontal Size Cal	20 turns ccw
R723	Low Horizontal Rate	Fully ccw
R724	High Horizontal Rate	Fully ccw
J720	Horizontal B+ Select	1 & 2 connected
J840	Flyback Protect Test	2 & 3 connected

CAUTION

If R723 and R724 are not turned fully counterclockwise before the POWER switch is set to ON, conditions may arise that will damage the Horizontal Deflecton transistor, Q330.

f. Check that the yoke is disconnected from the Horizontal Deflection board. Connect the equipment as shown in Fig. 9-9 and set the POWER switch to ON.

2. Check the waveforms and adjustments on the Horizontal Deflection board, A11A1, for proper circuit operation.

a. Check the +5 V supply at the junction of R746 and R747 for +4.75 V to +5.25 V.

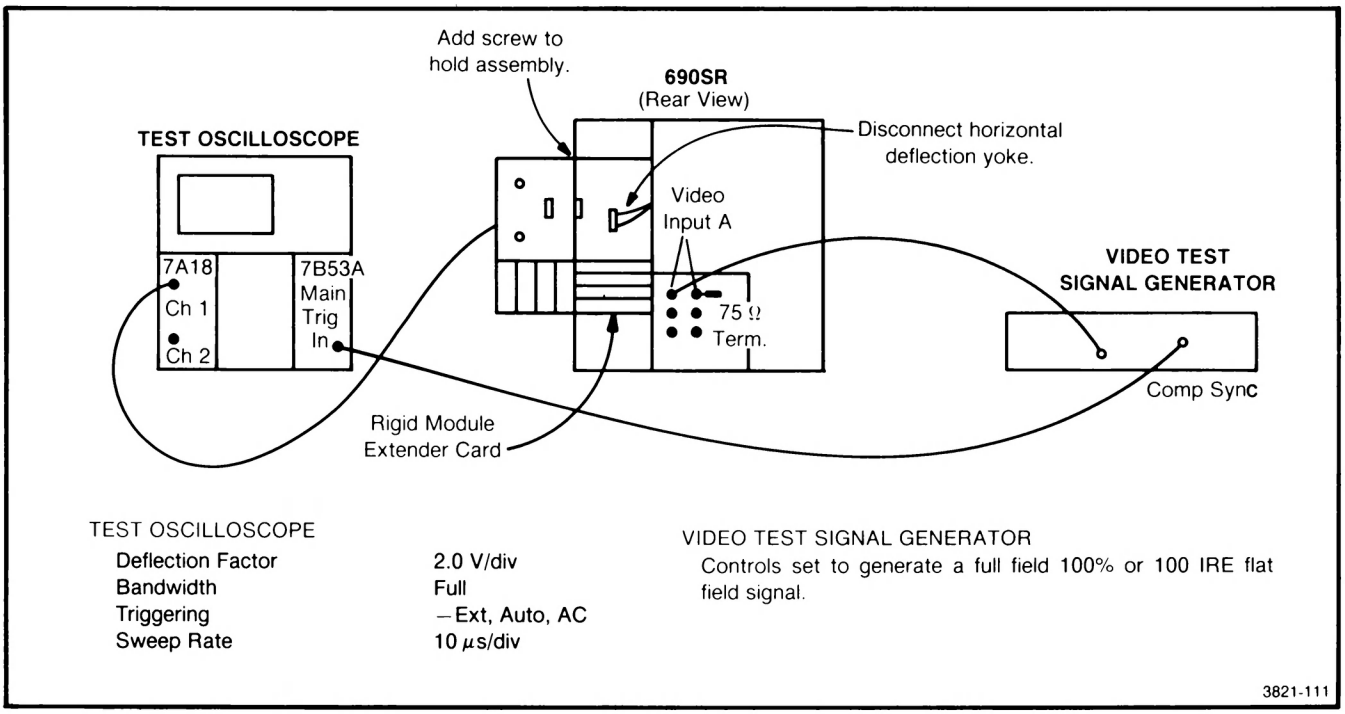

Fig. 9-9. Equipment setup for the Horizontal Deflection board precalibration procedure.

b. Observe the waveform at TP332. The waveform should be similar to the one shown in Fig. 9-10. Set the POWER switch to OFF, remove the interface module, and reset the POWER switch to ON. Again, observe the waveform at TP332. The waveform should be relatively stable except for a few microseconds of jitter since the monitor is now free running. Set the POWER to OFF, reinsert the interface module and reset the POWER switch to ON.

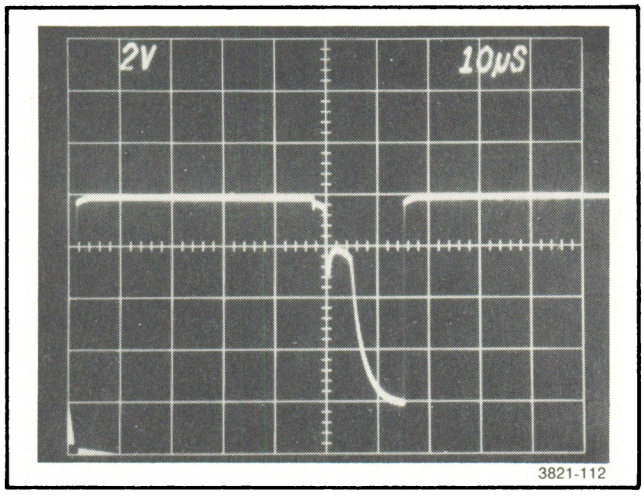

Fig. 9-10. Waveform at TP332. Waveform should remain stable at 15.75 kHz (decoder plugged into mainframe) and at 13 kHz (decoder unplugged from mainframe).

c. Observe the waveform at TP740. Pulse duration at its high state should be 18.4 μs ±0.5 μs as shown in Fig. 9-11.

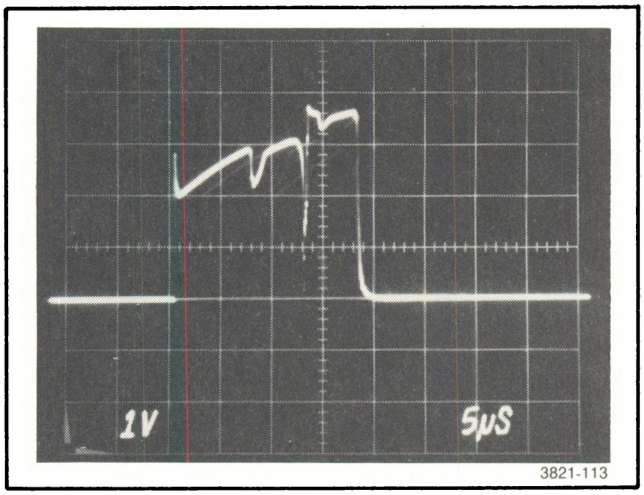

Fig. 9-11. Waveform at TP740. Pulse duration at high state is 18.4 μs ±0.5 μs.

d. Note the setting of R144 with a marking pen so it may be returned to its original position. Monitor TP134 for an 8.0 V to 20.0 V peak-to-peak ramp while adjusting R144 and the Horizontal Size control (R925 in drawer) through their range of operation (see Fig. 9-12). Return

R144 to its original position and set R925 fully counterclockwise.

e. Monitor the B+ Voltage at TP920 for approximately +34 V dc. Set the POWER switch to OFF and move J720 to the 2 and 4 jumpered position. Set the POWER switch to ON and check the B+ Voltage again for +34 V dc. Set the POWER switch to OFF and move J720 to the 2 and 3 jumpered position. Set the POWER switch to ON and check the B+ Voltage for +34 V dc. Set the POWER switch to OFF and return J720 back to the original 1 and 2 jumpered position. This will verify the B+ Amplifier is not shorted.

f. Set the POWER switch to OFF. Connect the yoke to the Horizontal Deflection assembly. Connect the equipment as shown in Fig. 9-13 and set the POWER switch to ON.

g. With the voltage probe from the oscilloscope, monitor TP510. Connect the current probe to the horizontal deflection yoke lead so the polarity of the waveform matches the waveform at TP510. The waveform at TP510 is a voltage representation of yoke current (a 1.0 A signal in the yoke causes a 2.0 V signal at TP510). Verify the accuracy of the volts-to-current conversion, to within ±5.0%, by comparing against the waveform from the current probe. See Fig. 9-14.

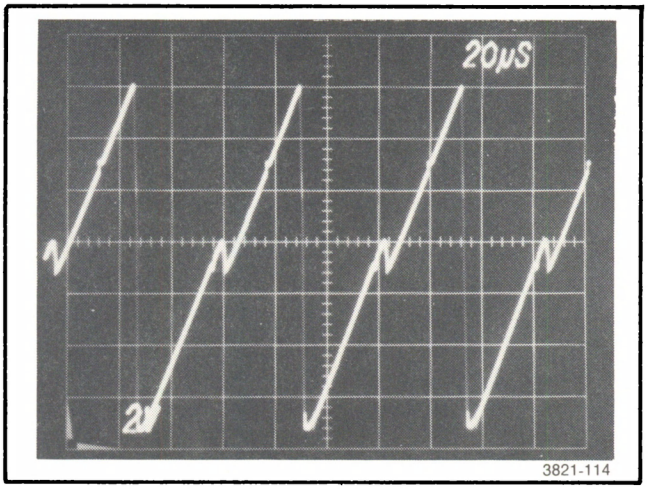

Fig. 9-12. Waveform at TP134 is variable from 8-20 V p-p.

CAUTION

The following steps involve adjusting the horizontal deflection yoke current close to its maximum operating limit. Care must be taken to insure that the yoke current does not exceed −3.4 A peak.

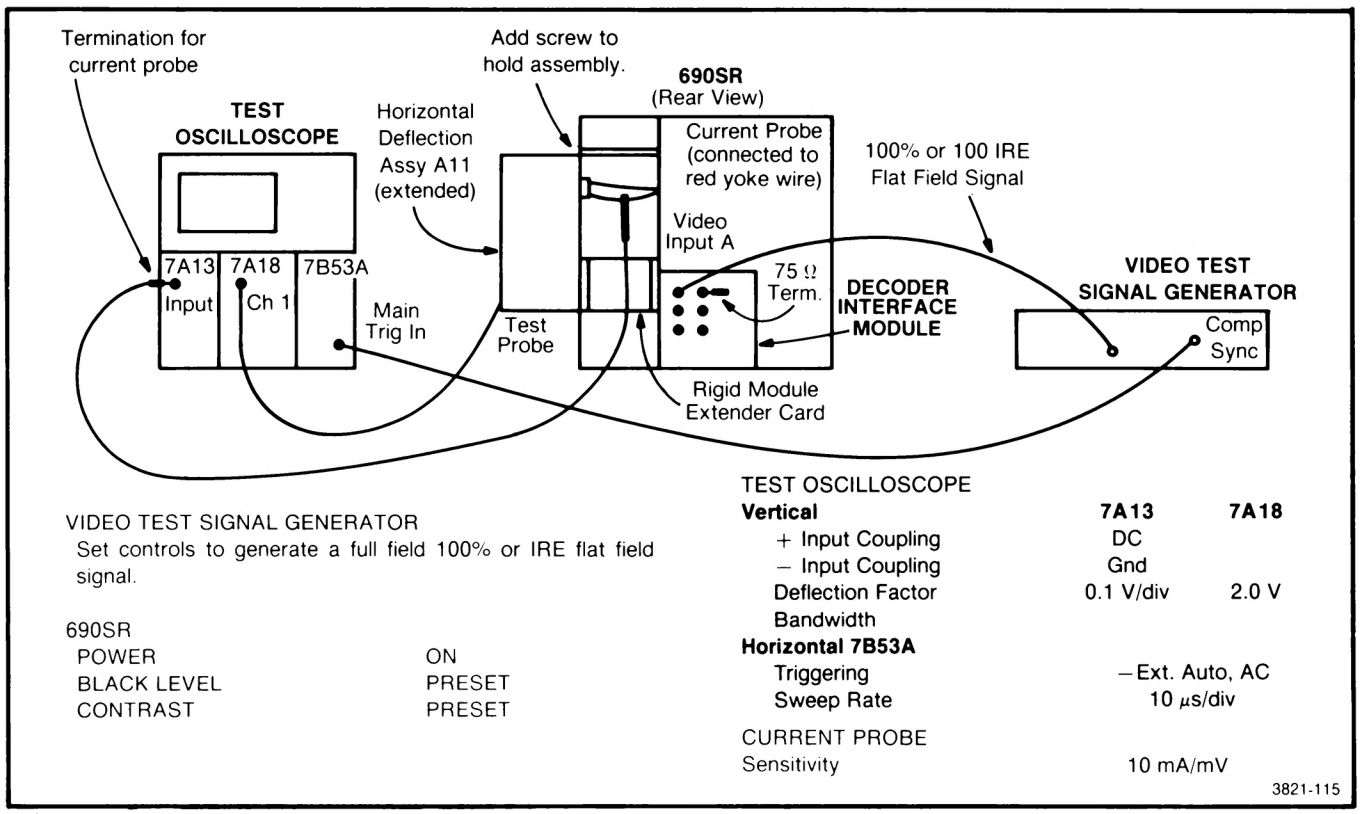

Fig. 9-13. Equipment setup conditions for measuring yoke current.

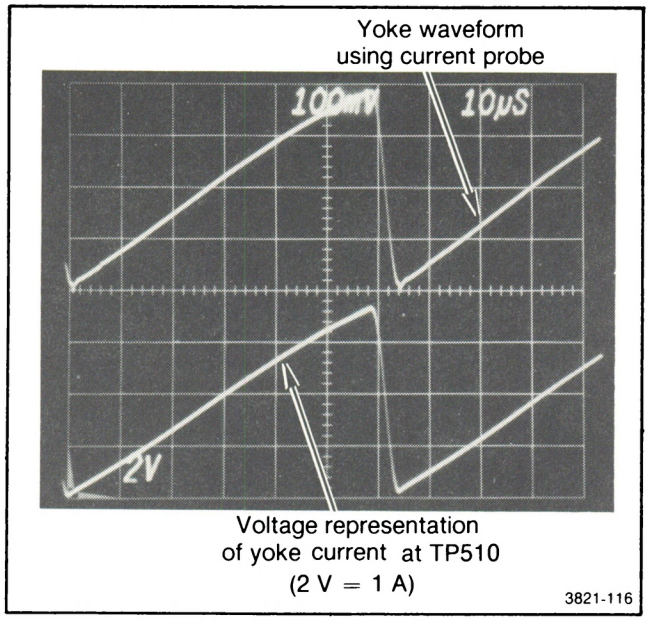

Fig. 9-14. Comparison of yoke current and voltage representation at TP510. Waveforms should be within ±5% of each other.

h. Monitor TP740 on A11A1 with the voltage probe. At the same time, monitor the horizontal deflection yoke current with the current probe. Verify the flyback protect circuit is operating by turning the Horizontal Size Calibrate adjustment (R620) clockwise until both waveforms become unstable; then, back off slightly (see Fig. 9-15). IF THE FLYBACK PROTECT CIRCUIT DOES NOT OPERATE, THERE IS A FAILURE. DO NOT LET THE YOKE CURRENT EXCEED −3.4 A PEAK.

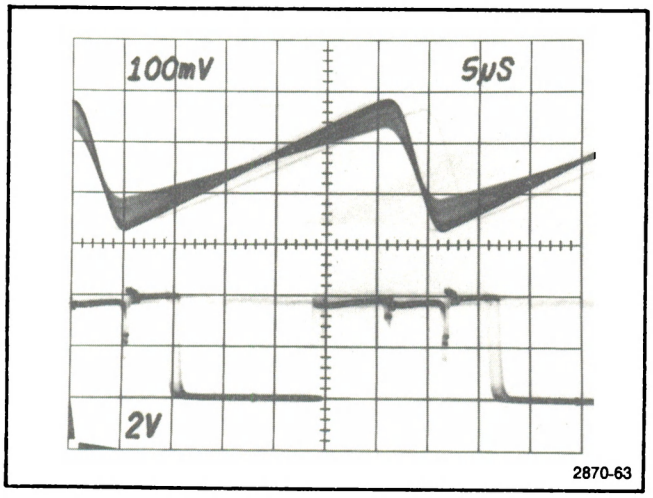

Fig. 9-15. Examples of unstable waveforms when flyback protect circuit is enabled due to excessive yoke current.

3. The following procedure describes how to adjust the Low and High Horizontal Rate controls (R723, R724) for −3.4 A peak yoke current limit at the low rate (interface module unplugged from mainframe) and at the high rate (interface module plugged into mainframe).

a. Set the POWER switch to OFF and unplug the interface module. Turn the Horizontal Size Control (R925 in drawer) fully counterclockwise. Reset the POWER switch to ON.

b. Turn R723 fully clockwise.

c. While monitoring yoke current, turn the Horizontal Size control (R925 in the drawer) three-fourths of its range clockwise and the Horizontal Size Calibrate (R620) clockwise until −3.4 A peak yoke current is reached.

NOTE

The circuit may limit before −3.4 A peak is reached. If so, go on to part d.

Adjust R723 counterclockwise until the protect circuit threshold is reached; then, back off slightly. The threshold of the protect circuit is reached when the current ramp waveform becomes unstable.

d. With the yoke current close to −3.4 A peak, measure the voltage across R821 for less than 1.5 V dc. If this voltage is exceeded, the horizontal deflection transistor, Q330, is defective .

e. Turn the Horizontal Size control (R925 in drawer) fully counterclockwise. Set the POWER switch to OFF. Plug the interface module back into the mainframe and reset the POWER switch to ON.

f. Turn R724 three-fourths of its range clockwise .

g. While monitoring the yoke current, turn the Horizontal Size control (R925 in the drawer) for −3.4 A peak yoke current. Adjust R724 counterclockwise until the protect circuit threshold is reached; then, back off slightly.

h. Set the POWER switch to OFF. Turn R723 fully counterclockwise. Repeat parts a through g of this step, excluding part f, until the circuit properly limits the yoke

current at both the low and high rate. DO NOT repeat part h when this condition is met; skip from part g to i.

i. Let the circuit run at −3.4 A peak for 5 minutes to allow warm up. Verify proper operation of the deflection transistor by monitoring the waveform at TP510 and repeating step d.

j. Turn the Horizontal Size control (R925 in the drawer) fully clockwise (protect circuit should operate) and turn the Horizontal Size Calibrate adjustment (R620) counterclockwise until yoke current waveform becomes stable (protect circuit will stop limiting) .

k. Move the Flyback Protect Test jumper (J840) to its 1 and 2 jumpered position. The yoke current waveform should become unstable. Verify the waveform does not exceed −3.4 A peak. THIS IS A MOMENTARY TEST ONLY.

l. Return the 'S' Capacitor Select jumpers to their original positions as noted in step 1 part a.

m. Perform step 20 of the Adjustment Procedure in Section 7 to complete the calibration of the Horizontal Deflection board .

Anode Current Limit Adjustment

The Current Limit potentiometer (R349) on the A7A2A1 High Voltage Regulator board is normally set for 1.6 mA of anode current. The A13A1 Video Amplifier board will not provide enough drive to the crt to yield an anode current of 1.6 mA. Therefore, the control grids in the crt must be driven toward ground potential in order to produce this magnitude of anode current. The following procedure provides a method of setting the Current Limit potentiometer, R349, on the High Voltage Regulator board.

1. Build a Divider as shown in Fig. 9-16.

2. Set the Screens to Off (no anode current).

3. Measure and record the voltage across R233 on the A7A2A1 High Voltage Regulator board.

4. The voltage across R233 for a given anode current is described by the expression:

$V = (32.4)(I) + V_F$

where V is the voltage across R233 (measured in volts) with the Screens set to On.

I is the desired current in mA.

V_F is the voltage across R233 (measured in volts) when the Screens are set to Off.

For Example: If the desired anode current limit is 1.6 mA, and the voltage across R233 is 8.16 V with the Screen switches turned off, then the voltage across R233 (Screens On) would be: $V = (32.4)(1.6) + 8.16 = 60$ V.

5. Set R349 on the A7A2A1 High Voltage Regulator board fully clockwise.

6. Set the POWER switch to OFF.

7. Install the manual beam current control fixtures to the test points on the A12 Crt Socket board. See Fig. 9-16. Set the POWER and Screen switches to ON.

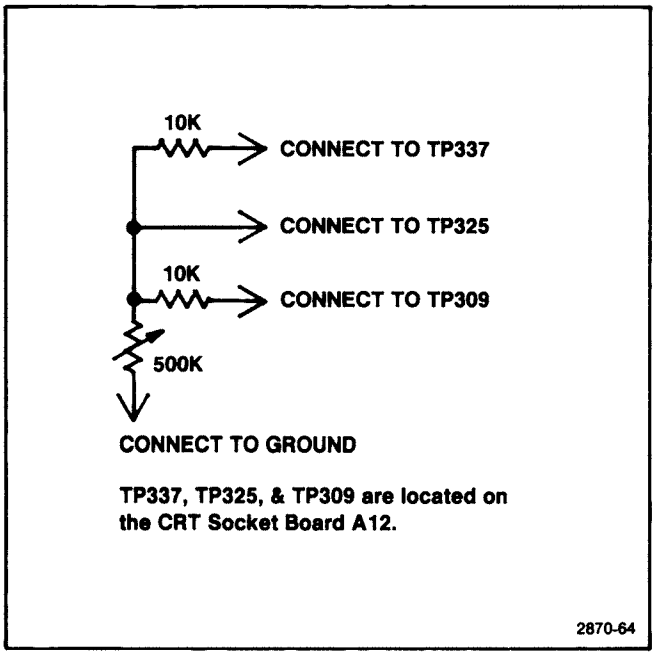

Fig. 9-16. Manual beam current fixture.

8. Set the manual beam current fixture for an anode current of 1.6 mA by setting the voltage across R233 as determined by the expression in part 4.

9. Vary R349 slowly counterclockwise until the high-voltage supply goes into current limit (alternately turns "off" and "on"). A ticking sound is readily audible when the high-voltage supply reaches current limit.

10. Set the manual beam current fixture for a lower anode current than when it was set in part 8, then slowly increase the beam current until the high voltage goes into current limit.

11. Check that the high voltage reaches the current limit threshold when the beam current reaches 1.6 mA as indicated by the voltage across R233.

Overvoltage Calibration

Recalibration of the Overvoltage adjustment (R434) is required if R332, R433, R434, or VR434 on the High Voltage Regulator board, A7A2A1, or T100 on the High Voltage Transformer assembly, A7A2A3, are replaced.

After the defective component(s) have been replaced, prepare the High Voltage Regulator board for calibration of the overvoltage protect circuit.

1. With the POWER switch set to OFF, desolder and remove R434 (Overvoltage) and replace it with a new, unsealed part. Turn R434 fully clockwise.

2. With an insulated test clip jumper, connect TP539 to the arm of R550.

3. Turn R550 fully counterclockwise.

4. Set the Screen switches in the drawer (S602, S606, and S612 on the Convergence Control board, A8A1) to Off.

5. Connect a voltmeter with a high input impedance (10 MΩ or higher) across pins 1 and 2 of J450 (two bottom pins). Set the voltmeter to measure 9.0 V dc.

6. Set the POWER switch to ON. Adjust R550 SLOWLY clockwise for a 9.0 V (±0.2 V) reading on the voltmeter.

7. Adjust R434 until the overvoltage protect circuit shuts down the high voltage. Activation of the overvoltage protect circuit may be observed by: variable high-pitched audible bursts, a flashing crt screen, or by monitoring the cathode of CR305 with an oscilloscope for an erratic B+ Supply Reference signal (200 V square wave). Repeat step 7 until the threshold of activating the overvoltage protect circuit is reached.

8. Turn the POWER switch to OFF. Seal R434 with a small amount of Super Glue to prevent further adjustment.

9. Remove the test clip jumper from J550 and TP539. Set the three Screen switches in the drawer to On.

10. Refer to the Adjustment Procedure (Secton 7) steps 4 and 5 to complete the calibration of the High Voltage Regulator board.

OPTIONS

Introduction

This section lists options for the 690SR TELEVISION COLOR MONITOR. Custom modifications may be negotiated, and are documented separately as they are developed. Information tags provided on the instrument list the Horizontal Scan Rate, Serial Number, Options installed, any Modifications to the instrument, and date of manufacture. See Fig. 10-1.

POWER CONNECTION OPTIONS

(See Replaceable Electrical Parts list and the ACCESSORIES tabbed page at the rear of this manual.)

Option A1

Power, Universal Europe, 220 V/16 A (Power Cord, 2 Fuse Caps, 2 Fuses).

Option A2

Power, United Kingdom, 240 V/15 A (Power Cord, 2 Fuse Caps, 2 Fuses).

Option A3

Power, Australia, 240 V/10 A (Power Cord, 2 Fuse Caps, 2 Fuses).

Option A4

Power, North America, 240 V/15 A (Power Cord and Fuse).

Option A5

Power, Switzerland, 250 V/10 A (Power Cord, 2 Fuse Caps, 2 Fuses).

INSTRUMENT OPTIONS

Option 01

Installs a TEKTRONIX 69M00 NTSC Decoder (notch) interface module with its control unit in the 690SR mainframe. The 69M00 interface module has loop-through video input and external sync input connectors. The module provides sync separation and decoding of NTSC encoded video signals to drive the mainframe with R, G, and B decoded signals, horizontal sync, and vertical sync.

Input signal selection and various performance characteristics are controllable from the front panel and slide-out drawer of the 690SR mainframe.

Option 02

Installs a TEKTRONIX 69M01 NTSC Comb Filter Decoder interface module with its control unit in the 690SR mainframe. The 69M01 interface module has loop-through A VIDEO INPUT, B VIDEO INPUT, and EXT SYNC input connectors. The module provides sync separation and decoding of NTSC encoded video signals to drive the mainframe with R, G, and B decoded signals, horizontal sync, and vertical sync.

Input signal selection and various performance characteristics are controllable from the decoder control assembly mounted in the control drawer of the 690SR mainframe.

Option 11

Installs a TEKTRONIX 69M10 PAL Decoder interface module with its control unit in the 690SR mainframe. A medium-resolution crt with EBU phosphors is installed in the 690SR mainframe. Crt dot triad spacing is 0.43 mm.

Input signal selection and various performance characteristics are controllable from the decoder control assembly mounted in the control drawer of the 690SR mainframe.

Option 20

Deletes the track slides and front handles from the 690SR mainframe.

Option 25

Installs a medium-resolution, controlled-phosphors crt in the 690SR mainframe. Crt dot triad spacing is 0.43 mm. (Dot triad spacing for a high-resolution crt is 0.31 mm.) Uses the same Performance Check and Adjustment Procedure as given in this manual.

Option 26

Installs an anti-reflection treated face, long-persistence phosphors, and high-resolution crt in the 690SR mainframe.

Option 27

Installs an EBU phosphors, medium-resolution crt in the 690SR mainframe. Crt dot triad spacing is 0.43 mm.

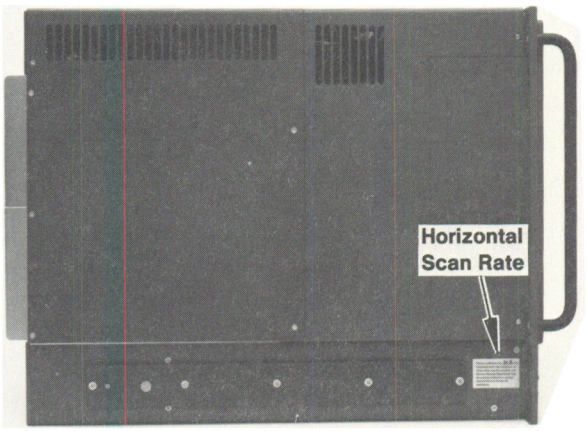

(A) Left side view.

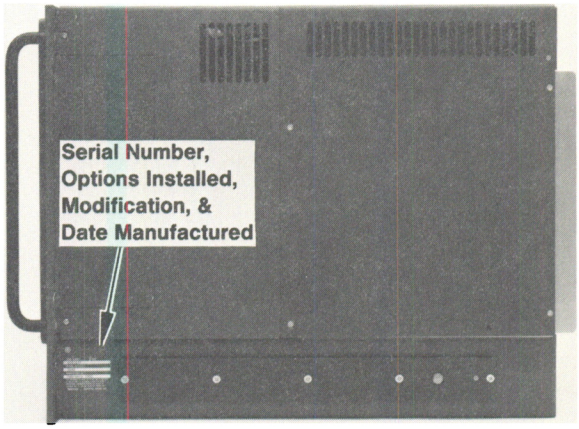

(B) Right side view.

2870-65

Fig. 10-1. Location of information tags.

REPLACEABLE ELECTRICAL PARTS

PARTS ORDERING INFORMATION

Replacement parts are available from or through your local Tektronix, Inc. Field Office or representative.

Changes to Tektronix instruments are sometimes made to accommodate improved components as they become available, and to give you the benefit of the latest circuit improvements developed in our engineering department. It is therefore important, when ordering parts, to include the following information in your order: Part number, instrument type or number, serial number, and modification number if applicable.

If a part you have ordered has been replaced with a new or improved part, your local Tektronix, Inc. Field Office or representative will contact you concerning any change in part number.

Change information, if any, is located at the rear of this manual.

LIST OF ASSEMBLIES

A list of assemblies can be found at the beginning of the Electrical Parts List. The assemblies are listed in numerical order. When the complete component number of a part is known, this list will identify the assembly in which the part is located.

CROSS INDEX-MFR. CODE NUMBER TO MANUFACTURER

The Mfr. Code Number to Manufacturer index for the Electrical Parts List is located immediately after this page. The Cross Index provides codes, names and addresses of manufacturers of components listed in the Electrical Parts List.

ABBREVIATIONS

Abbreviations conform to American National Standard Y1.1.

COMPONENT NUMBER (column one of the Electrical Parts List)

A numbering method has been used to identify assemblies, subassemblies and parts. Examples of this numbering method and typical expansions are illustrated by the following:

Example a.

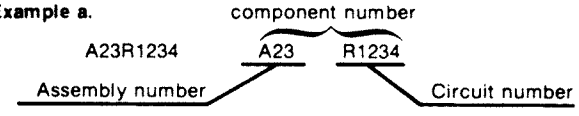

Read: Resistor 1234 of Assembly 23

Example b.

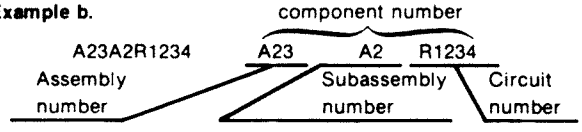

Read: Resistor 1234 of Subassembly 2 of Assembly 23

Only the circuit number will appear on the diagrams and circuit board illustrations. Each diagram and circuit board illustration is clearly marked with the assembly number. Assembly numbers are also marked on the mechanical exploded views located in the Mechanical Parts List. The component number is obtained by adding the assembly number prefix to the circuit number.

The Electrical Parts List is divided and arranged by assemblies in numerical sequence (e.g., assembly A1 with its subassemblies and parts, precedes assembly A2 with its subassemblies and parts).

Chassis-mounted parts have no assembly number prefix and are located at the end of the Electrical Parts List.

TEKTRONIX PART NO. (column two of the Electrical Parts List)

Indicates part number to be used when ordering replacement part from Tektronix.

SERIAL/MODEL NO. (columns three and four of the Electrical Parts List)

Column three (3) indicates the serial number at which the part was first used. Column four (4) indicates the serial number at which the part was removed. No serial number entered indicates part is good for all serial numbers.

NAME & DESCRIPTION (column five of the Electrical Parts List)

In the Parts List, an Item Name is separated from the description by a colon (:). Because of space limitations, an Item Name may sometimes appear as incomplete. For further Item Name identification, the U.S. Federal Cataloging Handbook H6-1 can be utilized where possible.

MFR. CODE (column six of the Electrical Parts List)

Indicates the code number of the actual manufacturer of the part. (Code to name and address cross reference can be found immediately after this page.)

MFR. PART NUMBER (column seven of the Electrical Parts List)

Indicates actual manufacturers part number.

CROSS INDEX—MFR. CODE NUMBER TO MANUFACTURER

Mfr. Code	Manufacturer	Address	City, State, Zip
000FJ	MARCOM SWITCHES INC.	67 ALBANY STREET	CAZENOVIA, N.Y. 13035
000HX	SAN-O INDUSTRIAL CORP.	170 WILBUR PLACE	BAHEMIA LONG ISLAND, NY 11716
000IG	FUJITSU-AMERICA INC.	1208 E. ARQUES AVE.	SUNNYVALE, CA 94086
00853	SANGAMO ELECTRIC CO., S. CAROLINA DIV.	P.O. BOX 128	PICKENS, SC 29671
01121	ALLEN-BRADLEY COMPANY	1201 2ND STREET SOUTH	MILWAUKEE, WI 53204
01295	TEXAS INSTRUMENTS, INC. SEMICONDUCTOR GROUP	P.O. BOX 5012	DALLAS, TX 75222
02111	SPECTROL ELECTRONICS CORPORATION	17070 EAST GALE AVENUE	CITY OF INDUSTRY, CA 91745
02735	RCA CORPORATION, SOLID STATE DIVISION	ROUTE 202	SOMERVILLE, NY 08876
03508	GENERAL ELECTRIC COMPANY, SEMI-CONDUCTOR PRODUCTS DEPARTMENT	ELECTRONICS PARK	SYRACUSE, NY 13201
04222	AVX CERAMICS, DIVISION OF AVX CORP.	P O BOX 867	MYRTLE BEACH, SC 29577
04426	ILLINOIS TOOL WORKS, INC., LICON DIV.	6615 W IRVING PARK ROAD	CHICAGO, IL 60634
04713	MOTOROLA, INC., SEMICONDUCTOR PROD. DIV.	5005 E MCDOWELL RD,PO BOX 20923	PHOENIX, AZ 85036
05347	ULTRONIX, INC.	461 N 22ND STREET	GRAND JUNCTION, CO 81501
05828	GENERAL INSTRUMENT CORP ELECTRONIC SYSTEMS DIV.	600 W JOHN ST.	HICKSVILLE LI, NY 11802
07263	FAIRCHILD SEMICONDUCTOR, A DIV. OF FAIRCHILD CAMERA AND INSTRUMENT CORP.	464 ELLIS STREET	MOUNTAIN VIEW, CA 94042
09023	CORNELL-DUBILIER ELECTRONIC DIVISION FEDERAL PACIFIC ELECTRIC CO.	2652 DALRYMPLE ST.	SANFORD, NC 27330
11502	TRW ELECTRONIC COMPONENTS, IRC FIXED RESISTORS, BOONE DIVISION	GREENWAY RD.	BOONE, NC 28607
12697	CLAROSTAT MFG. CO., INC.	LOWER WASHINGTON STREET	DOVER, NH 03820
12969	UNITRODE CORPORATION	580 PLEASANT STREET	WATERTOWN, MA 02172
14433	ITT SEMICONDUCTORS	3301 ELECTRONICS WAY P O BOX 3049	WEST PALM BEACH, FL 33402
14552	MICRO SEMICONDUCTOR CORP.	2830 E FAIRVIEW ST.	SANTA ANA, CA 92704
14752	ELECTRO CUBE INC.	1710 S. DEL MAR AVE.	SAN GABRIEL, CA 91776
15238	ITT SEMICONDUCTORS, A DIVISION OF INTER NATIONAL TELEPHONE AND TELEGRAPH CORP.	P.O. BOX 168, 500 BROADWAY	LAWRENCE, MA 01841
15454	RODAN INDUSTRIES, INC.	2905 BLUE STAR ST.	ANAHEIM, CA 92806
17856	SILICONIX, INC.	2201 LAURELWOOD DRIVE	SANTA CLARA, CA 95054
19396	ILLINOIS TOOL WORKS, INC. PAKTRON DIV.	900 FOLLIN LANE, SE	VIENNA, VA 22180
24546	CORNING GLASS WORKS, ELECTRONIC COMPONENTS DIVISION	550 HIGH STREET	BRADFORD, PA 16701
25403	AMPEREX ELECTRONIC CORP., SEMICONDUCTOR AND MICROCIRCUITS DIV.	PROVIDENCE PIKE	SLATERSVILLE, RI 02876
27014	NATIONAL SEMICONDUCTOR CORP.	2900 SEMICONDUCTOR DR.	SANTA CLARA, CA 95051
28480	HEWLETT-PACKARD CO., CORPORATE HQ.	1501 PAGE MILL RD.	PALO ALTO, CA 94304
32997	BOURNS, INC., TRIMPOT PRODUCTS DIV.	1200 COLUMBIA AVE.	RIVERSIDE, CA 92507
34335	ADVANCED MICRO DEVICES	901 THOMPSON PL.	SUNNYVALE, CA 94086
34371	HARRIS SEMICONDUCTOR, DIV. OF HARRIS CORPORATION	P. O. BOX 883	MELBOURNE, FL 32901
50157	MIDWEST COMPONENTS INC.	P. O. BOX 787 1981 PORT CITY BLVD.	MUSKEGON, MI 49443
50434	HEWLETT-PACKARD COMPANY	640 PAGE MILL ROAD	PALO ALTO, CA 94304
50522	MONSANTO CO., ELECTRONIC SPECIAL PRODUCTS	3400 HILLVIEW AVENUE	PALO ALTO, CA 94304
50558	ELECTRONIC CONCEPTS, INC.	526 INDUSTRIAL WAY WEST	EATONTOWN, NJ 07724
51642	CENTRE ENGINEERING INC.	2820 E COLLEGE AVENUE	STATE COLLEGE, PA 16801
52306	HIGH VOLTAGE DEVICES, INC.	7485 AVENUE 304	VISALIA, CA 93277
54473	MATSUSHITA ELECTRIC, CORP. OF AMERICA	1 PANASONIC WAY	SECAUCUS, NJ 07094
55680	NICHICON/AMERICA/CORP.	6435 N PROESEL AVENUE	CHICAGO, IL 60645
56289	SPRAGUE ELECTRIC CO.	87 MARSHALL ST.	NORTH ADAMS, MA 01247
57668	R-OHM CORP.	16931 MILLIKEN AVE.	IRVINE, CA 92713
58224	XENELL CORP.	HWY 77S PO BOX 726	WYNNEWOOD, OK 73098
59660	TUSONIX INC.	2155 N FORBES BLVD	TUCSON, AZ 85705
59821	CENTRALAB INC SUB NORTH AMERICAN PHILIPS CORP	7158 MERCHANT AVE	EL PASO, TX 79915
60705	CERA-MITE CORP.	1327 6TH AVE.	GRAFTON, WI 53024
71400	BUSSMAN MFG., DIVISION OF MCGRAW- EDISON CO.	2536 W. UNIVERSITY ST.	ST. LOUIS, MO 63107
72982	ERIE TECHNOLOGICAL PRODUCTS, INC.	644 W. 12TH ST.	ERIE, PA 16512
73138	BECKMAN INSTRUMENTS, INC., HELIPOT DIV.	2500 HARBOR BLVD.	FULLERTON, CA 92634
74276	SIGNALITE DIV., GENERAL INSTRUMENT CORP.	1933 HECK AVE.	NEPTUNE, NJ 07753
75042	TRW ELECTRONIC COMPONENTS, IRC FIXED		

CROSS INDEX—MFR. CODE NUMBER TO MANUFACTURER

Mfr. Code	Manufacturer	Address	City, State, Zip
	RESISTORS, PHILADELPHIA DIVISION	401 N. BROAD ST.	PHILADELPHIA, PA 19108
75915	LITTELFUSE, INC.	800 E. NORTHWEST HWY	DES PLAINES, IL 60016
76493	BELL INDUSTRIES, INC.,		
	MILLER, J. W., DIV.	19070 REYES AVE., P O BOX 5825	COMPTON, CA 90224
80009	TEKTRONIX, INC.	P O BOX 500	BEAVERTON, OR 97077
82389	SWITCHCRAFT, INC.	5555 N. ELSTON AVE.	CHICAGO, IL 60630
83003	VARO, INC.	P O BOX 411, 2203 WALNUT STREET	GARLAND, TX 75040
84171	ARCO ELECTRONICS	COMMUNITY DRIVE	GREAT NECK, NY 11022
84411	TRW ELECTRONIC COMPONENTS, TRW CAPACITORS	112 W. FIRST ST.	OGALLALA, NE 69153
90201	MALLORY CAPACITOR CO., DIV. OF	3029 E. WASHINGTON STREET	
	P. R. MALLORY AND CO., INC.	P. O. BOX 372	INDIANAPOLIS, IN 46206
91418	RADIO MATERIALS COMPANY, DIV. OF P.R.		
	MALLORY AND COMPANY, INC.	4242 W BRYN MAWR	CHICAGO, IL 60646
91637	DALE ELECTRONICS, INC.	P. O. BOX 609	COLUMBUS, NE 68601
95146	ALCO ELECTRONICS PRODUCTS, INC.	P. O. BOX 1348	LAWRENCE, MA 01842
96733	SAN FERNANDO ELECTRIC MFG CO	1501 FIRST ST	SAN FERNANDO, CA 91341
96733	SAN FERNANDO ELECTRIC MFG CO	1501 FIRST ST	SAN FERNANDO, CA 91341
96733	SAN FERNANDO ELECTRIC MFG CO	1501 FIRST ST	SAN FERNANDO, CA 91341
96733	SAN FERNANDO ELECTRIC MFG CO	1501 FIRST ST	SAN FERNANDO, CA 91341
T0040	GEO RELIABILITY	975 BENICIA AVE	SUNNYVALE, CA 94086
T0679	DILECTRON, INC.	2669 S. MYRTLE AVE.	MONROVIA, CA 91016
T1356	MURATA ERIE NORTH AMERICAN INC	1148 FRANKLIN RD SE	MARIETTA GA 30067

Component No.	Tektronix Part No.	Serial/Model No. Eff	Dscont	Name & Description	Mfr Code	Mfr Part Number
A2	670-6367-00			CKT BOARD ASSY:CENTER INTERCONNECT	80009	670-6367-00
A2	670-6366-00			CKT BOARD ASSY:RIGHT INTERCONNECT	80009	670-6366-00
A3	670-6365-00			CKT BOARD ASSY:LEFT INTERCONNECT	80009	670-6365-00
A4	119-1521-00			DEFL YOKE ASSY:	80009	119-1521-00
A5	119-1431-00			COIL,ASSY:BLUE LATERAL & CONVERGENCE	80009	119-1431-00
A5A1	----- -----			(PART OF A5)		
A6	119-1368-00			MAGNET,CVRSN:BLUE LATERAL/PURITY	80009	119-1368-00
A7	119-1442-08	B010338	B019999	POWER SUPPLY:LV & HV	80009	119-1442-08
A7	119-1442-10	B020000	B029999	POWER SUPPLY:LV & HV	80009	119-1442-10
A7	119-1442-12	B030000		POWER SUPPLY:LV & HV	80009	119-1442-12
A7A1	672-0873-00	B010100	B010152	MODULE ASSY:LV SUPPLY	80009	672-0873-00
A7A1	672-0873-02	B010153	B011044	CKT BOARD ASSY:LOW VOLTS POWER SUPPLY	80009	672-0873-02
A7A1	672-0873-03	B011045		CKT BOARD ASSY:LOW VOLTS POWER SUPPLY	80009	672-0873-03
A7A1A1	670-6358-00	B010100	B010160	CKT BOARD ASSY:POWER SUPPLY INPUT	80009	670-6358-00
A7A1A1	670-6358-01	B010161		CKT BOARD ASSY:POWER SUPPLY INPUT	80009	670-6358-01
A7A1A2	670-6356-00	B010100	B010152	CKT BOARD ASSY:POWER SUPPLY INVERTER	80009	670-6356-00
A7A1A2	670-6356-02	B010153	B011044	CKT BOARD ASSY:POWER SUPPLY INVERTER	80009	670-6356-02
A7A1A2	670-6356-03	B011045		CKT BOARD ASSY:POWER SUPPLY INVERTER	80009	670-6356-03
A7A1A3	670-6357-00			CKT BOARD ASSY:POWER SUPPLY OUTPUT	80009	670-6357-00
A7A2	672-0874-00	B010100	B010150	MODULE ASSY:HIGH VOLTAGE	80009	672-0874-00
A7A2	672-0874-02	B010151	B010151	CKT BOARD ASSY:HIGH VOLTAGE POWER	80009	672-0874-02
A7A2	672-0874-04	B010152	B010337	CKT BOARD ASSY:HIGH VOLTAGE POWER	80009	672-0874-04
A7A2	672-0874-08	B010338	B010386	CKT BOARD ASSY:HIGH VOLTAGE POWER	80009	672-0874-08
A7A2	672-0874-06	B010387	B029999	CKT BOARD ASSY:HIGH VOLTAGE POWER	80009	672-0874-06
A7A2	672-0874-10	B030000		CKT BOARD ASSY:HIGH VOLTAGE POWER	80009	672-0874-10
A7A2A1	670-6354-00	B010100	B010154	CKT BOARD ASSY:HIGH VOLTAGE REGULATOR	80009	670-6354-00
A7A2A1	670-6354-02	B010155		CKT BOARD ASSY:HIGH VOLTAGE REGULATOR	80009	670-6354-02
A7A2A2	119-1409-00			HV FOCUS ASSY:	80009	119-1409-00
A7A2A3	119-1441-00	B010100	B010337	PWR SPLY SUBAS:30KV	80009	119-1441-00
A7A2A3	119-1441-02	B010338	B029999	POWER SUPPLY SUB ASSY:30KV	80009	119-1441-01
A7A2A3	119-1441-04	B030000		POWER SUPPLY SUB ASSY:30KV	80009	119-1441-04
A8	672-0973-00	B010100	B010134	MODULE ASSY:CONTROL DRAWER	80009	672-0973-00
A8	672-0973-01	B010135	B010159	MODULE ASSY:CONTROL DRAWER	80009	672-0973-01
A8	672-0973-02	B010160	B020794	CKT BOARD ASSY:CONTROL DRAWER	80009	672-0973-02
A8	672-0973-03	B020795		CKT BOARD ASSY:CONTROL DRAWER	80009	672-0973-03
A8A1	670-6362-00	B010100	B010159	CKT BOARD ASSY:CONVERGENCE CONTROL	80009	670-6362-00
A8A1	670-6362-01	B010160	B020749	CKT BOARD ASSY:CONVERGENCE CONTROL	80009	670-6362-01
A8A1	670-6362-03	B020750		CKT BOARD ASSY:CONVERGENCE CONTROL	80009	670-6362-03
A8A2	670-6363-00	B010100	B010158	CKT BOARD ASSY:CONVERGENCE GENERATOR	80009	670-6363-00
A8A2	670-6363-01	B010159	B020794	CKT BOARD ASSY:CONVERGENCE GENERATOR	80009	670-6363-01
A8A2	670-6363-02	B020795		CKT BOARD ASSY:CONVERGENCE GENERATOR	80009	670-6363-02
A9	672-0869-00	B010100	B020831	MODULE ASSY:RASTER CONTROL	80009	672-0869-00
A9	672-0869-02	B020832		CKT BOARD ASSY:RASTER CONTROL	80009	672-0869-02
A9A1	670-6353-00	B010100	B020831	CKT BOARD ASSY:RASTER CONTROL	80009	670-6353-00
A9A1	670-6353-03	B020832		CKT BOARD ASSY:RASTER CONTROL	80009	670-6353-03
A10	672-0870-00	B010100	B010151	MODULE ASSY:VERTICAL DEFLECTION	80009	672-0870-00
A10	672-0870-01	B010152		CKT BOARD ASSY:VERTICAL DEFLECTION	80009	672-0870-01
A10A1	670-6351-00	B010100	B010151	CKT BOARD ASSY:VERTICAL DEFLECTION	80009	670-6351-00
A10A1	670-6351-01	B010152		CKT BOARD ASSY:VERTICAL DEFLECTION	80009	670-6351-01
A11	672-0871-00	B010100	B010159	MODULE ASSY:HORIZONTAL DEFLECTION	80009	672-0871-00
A11	672-0871-01	B010160	B010409	MODULE ASSY:HORIZONTAL DEFLECTION	80009	672-0871-01
A11	672-0871-03	B010410		CKT BOARD ASSY:HORIZONTAL DEFLECTION	80009	672-0871-03
A11A1	670-6350-00	B010100	B010159	CKT BOARD ASSY:HORIZONTAL DEFLECTION	80009	670-6350-00
A11A1	670-6350-01	B010160		CKT BOARD ASSY:HORIZONTAL DEFLECTION	80009	670-6350-01

Component No.	Tektronix Part No.	Serial/Model No. Eff	Dscont	Name & Description	Mfr Code	Mfr Part Number
A11A2	670-6352-00	B010100	B010159	CKT BOARD ASSY:H DELAY STABILIZER	80009	670-6352-00
A11A2	670-6352-01	B010160	B010409	CKT BOARD ASSY:H DELAY STABILIZER	80009	670-6352-01
A11A2	670-6352-02	B010410		CKT BOARD ASSY:H DELAY STABILIZER	80009	670-6352-02
A12	672-1049-00			CRT SOCKET ASSY:	80009	672-1049-00
A13	672-0875-02	B010100	B010379	MODULE ASSY:VIDEO AMPL	80009	672-0875-02
A13	672-0875-03	B010380		CKT BOARD ASSY:VIDEO AMPL	80009	672-0875-03
A13A1	670-6355-02	B010100	B010379	CKT BOARD ASSY:VIDEO AMPL	80009	670-6355-02
A13A1	670-6355-03	B010380		CKT BOARD ASSY:VIDEO AMPL	80009	
A14	672-0872-00			MODULE ASSY:CONVERGENCE OUTPUT	80009	672-0872-00
A14A1	670-6361-00	B010100	B020749	CKT BOARD ASSY:CONVERGENCE OUTPUT	80009	670-6361-00
A14A1	670-6361-02	B020750		CKT BOARD ASSY:CONVERGENCE OUTPUT	80009	670-6361-02

Component No.	Tektronix Part No.	Serial/Model No. Eff	Dscont	Name & Description	Mfr Code	Mfr Part Number
A5	----- -----			COIL ASSY:BLUE LATERAL & CONVERGENCE		
A5A1	----- -----			(PART OF A5)		
A5A1L201	----- -----			TRANSFORMER,RF:VARIABLE		
A5A1L201	----- -----			(PART OF A5)		
A5A1L202	----- -----			TRANSFORMER,RF:VARIABLE		
A5A1L202	----- -----			(PART OF A5)		
A5A1L203	----- -----			TRANSFORMER,RF:VARIABLE		
A5A1L203	----- -----			(PART OF A5)		
A7A1	672-0873-00	B010100	B010152	MODULE ASSY:LV SUPPLY	80009	672-0873-00
A7A1	672-0873-02	B010153	B011044	CKT BOARD ASSY:LOW VOLTS POWER SUPPLY	80009	672-0873-02
A7A1	672-0873-03	B011045		CKT BOARD ASSY:LOW VOLTS POWER SUPPLY	80009	672-0873-03
A7A1C329	290-0628-00			CAP.,FXD,ELCTLT:950UF,+50-10%,200V	56289	36D7560
A7A1C390	285-1089-00			CAP.,FXD,PLSTC:0.04UF,5%,900V	50558	PA6-0787J
A7A1C439	290-0628-00			CAP.,FXD,ELCTLT:950UF,+50-10%,200V	56289	36D7560
A7A1FL101	119-1306-00			FILTER,RFI:6A,250V,50-400HZ	56289	6JX5431A
A7A1L390	108-1071-00			COIL,RF:FIXED,880UH	80009	108-1071-00
A7A1S100	260-1961-00			SWITCH,ROCKER:DPST,6(4)A,250V	000FJ	1802.1121
A7A1S101	260-0976-00			SWITCH,PUSH:DPDT,MOMENTARY	04426	76-2575
A7A1T315	120-1359-00			XFMR,PWR,SDN&SU:CONVERTER,HF	80009	120-1359-00
A7A1A1	670-6358-00	B010100	B010160	CKT BOARD ASSY:POWER SUPPLY INPUT	80009	670-6358-00
A7A1A1	670-6358-01	B010161		CKT BOARD ASSY:POWER SUPPLY INPUT	80009	670-6358-01
A7A1A1C126	290-0818-01			CAP.,FXD,ELCTLT:390UF,+100-10%,40V	56289	672D397H040DS5C
A7A1A1C127	290-0818-01			CAP.,FXD,ELCTLT:390UF,+100-10%,40V	56289	672D397H040DS5C
A7A1A1C227	290-0818-01			CAP.,FXD,ELCTLT:390UF,+100-10%,40V	56289	672D397H040DS5C
A7A1A1C322	283-0189-00			CAP.,FXD,CER DI:0.1UF,20%,400V	56289	5C40X5R104M400B
A7A1A1C423	285-1196-00			CAP.,FXD,PAPER:0.01UF,20%,250V	80009	285-1196-00
A7A1A1CR115	152-0655-00			SEMICOND DEVICE:SILICON,100V,3A	03508	A115AX39
A7A1A1CR116	152-0655-00			SEMICOND DEVICE:SILICON,100V,3A	03508	A115AX39
A7A1A1CR123	152-0661-00			SEMICOND DEVICE:RECT,SI,600V,3A,FAST	04713	MR856
A7A1A1CR125	152-0721-00			SEMICOND DEVICE:RECT,SI,100V,12A,FAST REC	25403	BYW30-100U
A7A1A1CR126	152-0721-00			SEMICOND DEVICE:RECT,SI,100V,12A,FAST REC	25403	BYW30-100U
A7A1A1CR213	152-0400-00			SEMICOND DEVICE:SILICON,400V,1A	80009	152-0400-00
A7A1A1CR214	152-0400-00			SEMICOND DEVICE:SILICON,400V,1A	80009	152-0400-00
A7A1A1CR215	152-0400-00			SEMICOND DEVICE:SILICON,400V,1A	80009	152-0400-00
A7A1A1CR216	152-0400-00			SEMICOND DEVICE:SILICON,400V,1A	80009	152-0400-00
A7A1A1CR223	152-0661-00			SEMICOND DEVICE:RECT,SI,600V,3A,FAST	04713	MR856
A7A1A1CR239	152-0661-00			SEMICOND DEVICE:RECT,SI,600V,3A,FAST	04713	MR856
A7A1A1CR338	152-0661-00			SEMICOND DEVICE:RECT,SI,600V,3A,FAST	04713	MR856
A7A1A1CR339	152-0661-00			SEMICOND DEVICE:RECT,SI,600V,3A,FAST	04713	MR856
A7A1A1CR435	152-0661-00			SEMICOND DEVICE:RECT,SI,600V,3A,FAST	04713	MR856
A7A1A1DS312	150-0030-00			LAMP,GLOW:NEON,T-2,60 TO 90 VOLTS	74276	NE2V-T
A7A1A1E338	119-0181-00			ARSR,ELEC SURGE:230V,GAS FILLED	74276	CG230L
A7A1A1E422	119-0284-00			ARSR,ELEC SURGE:1.5KV,+/-500VD	91418	SCQR75Y152-1R0
A7A1A1E435	119-0181-00			ARSR,ELEC SURGE:230V,GAS FILLED	74276	CG230L
A7A1A1L132	108-0337-00			COIL,RF:25UH	80009	108-0337-00
A7A1A1L133	108-0556-00			COIL,RF:12UH	80009	108-0556-00
A7A1A1R215	315-0471-00			RES.,FXD,CMPSN:470 OHM,5%,0.25W	01121	CB4715
A7A1A1R319	315-0226-00			RES.,FXD,CMPSN:22M OHM,5%,0.25W	01121	CB2265
A7A1A1R328	301-0304-00			RES.,FXD,CMPSN:300K OHM,5%,0.5W	01121	EB3045
A7A1A1R335	305-0204-00			RES.,FXD,CMPSN:200K OHM,5%,2W	01121	HB2045

Component No.	Tektronix Part No.	Serial/Model No. Eff	Dscont	Name & Description	Mfr Code	Mfr Part Number
A7A1A1R338	301-0154-00			RES.,FXD,CMPSN:150K OHM,5%,0.5W	01121	EB1545
A7A1A1R435	301-0154-00			RES.,FXD,CMPSN:150K OHM,5%,0.5W	01121	EB1545
A7A1A1RC418	119-1168-00			CAPACITOR-RES:0.1UF,20% & 22 OHM,10%,250V	14752	RG1782-1
A7A1A1RT105	308-0441-00			RES.,FXD,WW:3 OHM,5%,3W	91637	CW2B-3R00J
A7A1A1RT239	307-0746-00			RES.,THERMAL:5 OHM,10%,7A/DEG C	15454	SG-6
A7A1A1RT412	307-0768-00			RES,THERMAL:10 OHM,30%	50157	170D10001
A7A1A1RT412	----- -----			(ENDED USAGE 670-6358-00 ONLY)		
A7A1A1RT415	307-0825-00			RES,THERMAL: 35 OHM,20%,220V	50157	165D5001
A7A1A1RT415	----- -----			(BEGAN USAGE 670-6358-00 ONLY)		
A7A1A1RT436	307-0746-00			RES.,THERMAL:5 OHM,10%,7A/DEG C	15454	SG-6
A7A1A1T215	120-1421-00			TRANSFORMER,RF:TOROID	80009	120-1421-00

Component No.	Tektronix Part No.	Serial/Model No. Eff	Dscont	Name & Description	Mfr Code	Mfr Part Number
A7A1A2	670-6356-00	B010100	B010152	CKT BOARD ASSY:POWER SUPPLY INVERTER	80009	670-6356-00
A7A1A2	670-6356-02	B010153	B011044	CKT BOARD ASSY:POWER SUPPLY INVERTER	80009	670-6356-02
A7A1A2	670-6356-03	B011045		CKT BOARD ASSY:POWER SUPPLY INVERTER	80009	670-6356-03
A7A1A2C108	283-0001-00			CAP.,FXD,CER DI:0.005UF,+100-0%,500V	59821	2DDH61L502P
A7A1A2C143	285-1196-00			CAP.,FXD,PAPER:0.01UF,20%,250V	80009	285-1196-00
A7A1A2C208	290-0942-00			CAP.,FXD,ELCTLT:100UF,+100-10%,25V	56289	672D107H025CG2C
A7A1A2C208	----- -----			(ENDED USAGE 670-6350-02 ONLY)		
A7A1A2C208	285-1056-00			CAP.,FXD,PLSTC:1UF,2%,50V	14752	650B1A105G
A7A1A2C208	----- -----			(BEGAN USAGE 670-6350-03 ONLY)		
A7A1A2C209	290-0942-00			CAP.,FXD,ELCTLT:100UF,+100-10%,25V	56289	672D107H025CG2C
A7A1A2C209	----- -----			(ENDED USAGE 670-6350-02 ONLY)		
A7A1A2C209	285-1056-00			CAP.,FXD,PLSTC:1UF,2%,50V	14752	650B1A105G
A7A1A2C209	----- -----			(BEGAN USAGE 670-6350-03 ONLY)		
A7A1A2C215	285-1164-00			CAP.,FXD,PLSTC:5UF,10%,400V	84411	TRW-35-50594
A7A1A2C248	285-1196-00			CAP.,FXD,PAPER:0.01UF,20%,250V	80009	285-1196-00
A7A1A2C249	285-1196-00			CAP.,FXD,PAPER:0.01UF,20%,250V	80009	285-1196-00
A7A1A2C304	281-0773-00			CAP.,FXD,CER DI:0.1UF,20%,50V	04222	MA205E104MAA
A7A1A2C306	281-0775-00			CAP.,FXD,CER DI:0.1UF,20%,50V	04222	MA205E104MAA
A7A1A2C343	281-0765-00			CAP.,FXD,CER DI:100PF,5%,100V	51642	G1710-100NP0101J
A7A1A2C345	281-0765-00			CAP.,FXD,CER DI:100PF,5%,100V	51642	G1710-100NP0101J
A7A1A2C346	281-0773-00			CAP.,FXD,CER DI:0.1UF,20%,50V	04222	MA205E104MAA
A7A1A2C359	290-0745-00			CAP.,FXD,ELCTLT:22UF,+50-10%,25V	54473	ECE-A25V22L
A7A1A2C364	281-0773-00			CAP.,FXD,CER DI:0.1UF,20%,50V	04222	MA205E104MAA
A7A1A2C402	281-0791-00			CAP.,FXD,CER DI:270PF,10%,100V	04222	MA101A271KAA
A7A1A2C407	281-0791-00			CAP.,FXD,CER DI:270PF,10%,100V	04222	MA101A271KAA
A7A1A2C408	281-0775-00			CAP.,FXD,CER DI:0.1UF,20%,50V	04222	MA205E104MAA
A7A1A2C410	281-0812-00			CAP.,FXD,CER DI:1000PF,10%,100V	04222	MA101C102KAA
A7A1A2C412	283-0594-00			CAP.,FXD,MICA D:0.001UF,1%,100V	00853	D151F102F0
A7A1A2C413	281-0775-00			CAP.,FXD,CER DI:0.1UF,20%,50V	04222	MA205E104MAA
A7A1A2C414	281-0775-00			CAP.,FXD,CER DI:0.1UF,20%,50V	04222	MA205E104MAA
A7A1A2C415	290-0782-00			CAP.,FXD,ELCTLT:4.7UF,+75-10%,35V	55680	ULA1V4R7TEA
A7A1A2C416	290-0778-00			CAP.,FXD,ELCTLT:1UF,+50-10%,50V	54473	ECE-A50N1
A7A1A2C416	----- -----			(ENDED USAGE 670-6350-02 ONLY)		
A7A1A2C416	283-0111-00			CAP.,FXD,CER DI:0.1UF,20%,50V	96733	R2632
A7A1A2C416	----- -----			(BEGAN USAGE 670-6350-03 ONLY)		
A7A1A2C417	281-0812-00			CAP.,FXD,CER DI:1000PF,10%,100V	04222	MA101C102KAA
A7A1A2C417	----- -----			(ENDED USAGE 670-6350-02 ONLY)		
A7A1A2C417	283-0111-00			CAP.,FXD,CER DI:0.1UF,20%,50V	96733	R2632
A7A1A2C417	----- -----			(BEGAN USAGE 670-6350-03 ONLY)		
A7A1A2C434	290-0778-00			CAP.,FXD,ELCTLT:1UF,+50-10%,50V	54473	ECE-A50N1
A7A1A2C434	----- -----			(ENDED USAGE 670-6350-02 ONLY)		
A7A1A2C434	283-0221-00			CAP.,FXD,CER DI:0.47UF,20%,50V	72982	8131N087X7R0474M
A7A1A2C434	----- -----			(BEGAN USAGE 670-6350-03 ONLY)		
A7A1A2C442	283-0328-00			CAP.,FXD,CER DI:0.03UF,+80-20%,200V	72982	8131N225Z5U0303Z
A7A1A2C445	290-0778-00			CAP.,FXD,ELCTLT:1UF,+50-10%,50V	54473	ECE-A50N1
A7A1A2C447	290-0782-00			CAP.,FXD,ELCTLT:4.7UF,+75-10%,35V	55680	ULA1V4R7TEA
A7A1A2C449	281-0775-00			CAP.,FXD,CER DI:0.1UF,20%,50V	04222	MA205E104MAA
A7A1A2C451	290-0778-00			CAP.,FXD,ELCTLT:1UF,+50-10%,50V	54473	ECE-A50N1
A7A1A2C455	281-0775-00			CAP.,FXD,CER DI:0.1UF,20%,50V	04222	MA205E104MAA
A7A1A2C459	281-0773-00			CAP.,FXD,CER DI:0.1UF,20%,50V	04222	MA205E104MAA
A7A1A2CR106	152-0400-00			SEMICOND DEVICE:SILICON,400V,1A	80009	152-0400-00
A7A1A2CR107	152-0400-00			SEMICOND DEVICE:SILICON,400V,1A	80009	152-0400-00
A7A1A2CR107	----- -----			(BEGAN USAGE 670-6350-02 ONLY)		
A7A1A2CR109	152-0661-00			SEMICOND DEVICE:RECT,SI,600V,3A,FAST	04713	MR856

Component No.	Tektronix Part No.	Serial/Model No. Eff	Dscont	Name & Description	Mfr Code	Mfr Part Number
A7A1A2CR205	152-0661-00			SEMICOND DEVICE:RECT,SI,600V,3A,FAST	04713	MR856
A7A1A2CR209	152-0198-00			SEMICOND DEVICE:SILICON,200V,3A	03508	1N5624
A7A1A2CR307	152-0400-00			SEMICOND DEVICE:SILICON,400V,1A	80009	152-0400-00
A7A1A2CR307	----- -----			(BEGAN USAGE 670-6350-02 ONLY)		
A7A1A2CR308	152-0198-00			SEMICOND DEVICE:SILICON,200V,3A	03508	1N5624
A7A1A2CR315	152-0242-00			SEMICOND DVC:SIG,SI,225V,0.2A,D0-7	07263	FDH5004
A7A1A2CR332	152-0242-00			SEMICOND DVC:SIG,SI,225V,0.2A,D0-7	07263	FDH5004
A7A1A2CR337	152-0242-00			SEMICOND DVC:SIG,SI,225V,0.2A,D0-7	07263	FDH5004
A7A1A2CR338	152-0242-00			SEMICOND DVC:SIG,SI,225V,0.2A,D0-7	07263	FDH5004
A7A1A2CR355	152-0141-02			SEMICOND DVC,DI:SW,SI,30V,150MA,30V,DO-35	01295	1N4152R
A7A1A2CR356	152-0141-02			SEMICOND DVC,DI:SW,SI,30V,150MA,30V,DO-35	01295	1N4152R
A7A1A2CR432	152-0141-02			SEMICOND DVC,DI:SW,SI,30V,150MA,30V,DO-35	01295	1N4152R
A7A1A2CR435	152-0242-00			SEMICOND DVC:SIG,SI,225V,0.2A,D0-7	07263	FDH5004
A7A1A2CR436	152-0333-02			SEMICOND DEVICE:SILICON,SW,55V,200MA,TEST	80009	152-0333-02
A7A1A2CR438	152-0333-02			SEMICOND DEVICE:SILICON,SW,55V,200MA,TEST	80009	152-0333-02
A7A1A2CR439	152-0333-02			SEMICOND DEVICE:SILICON,SW,55V,200MA,TEST	80009	152-0333-02
A7A1A2CR442	152-0333-02			SEMICOND DEVICE:SILICON,SW,55V,200MA,TEST	80009	152-0333-02
A7A1A2CR443	152-0141-02			SEMICOND DVC,DI:SW,SI,30V,150MA,30V,DO-35	01295	1N4152R
A7A1A2CR445	152-0141-02			SEMICOND DVC,DI:SW,SI,30V,150MA,30V,DO-35	01295	1N4152R
A7A1A2CR446	152-0141-02			SEMICOND DVC,DI:SW,SI,30V,150MA,30V,DO-35	01295	1N4152R
A7A1A2CR448	152-0141-02			SEMICOND DVC,DI:SW,SI,30V,150MA,30V,DO-35	01295	1N4152R
A7A1A2CR449	152-0141-02			SEMICOND DVC,DI:SW,SI,30V,150MA,30V,DO-35	01295	1N4152R
A7A1A2CR455	152-0141-02			SEMICOND DVC,DI:SW,SI,30V,150MA,30V,DO-35	01295	1N4152R
A7A1A2L248	108-1088-00			COIL,RF:FIXED,80UH	80009	108-1088-00
A7A1A2Q115	151-0508-01			TRANSISTOR:UJT,ST,T0-68	80009	151-0508-01
A7A1A2Q205	151-0679-00			TRANSISTOR:SILICON,NPN	04713	SJE362
A7A1A2Q305	151-0679-00			TRANSISTOR:SILICON,NPN	04713	SJE362
A7A1A2Q312	151-0302-01			TRANSISTOR:SILICON,NPN,SEL	80009	151-0302-01
A7A1A2Q315	151-0301-02			TRANSISTOR:SILICON,PNP	04713	2N2907A
A7A1A2Q319	151-0254-00			TRANSISTOR:SILICON,NPN	03508	X38L3118
A7A1A2Q322	151-0302-01			TRANSISTOR:SILICON,NPN,SEL	80009	151-0302-01
A7A1A2Q335	151-0302-01			TRANSISTOR:SILICON,NPN,SEL	80009	151-0302-01
A7A1A2Q338	151-0302-01			TRANSISTOR:SILICON,NPN,SEL	80009	151-0302-01
A7A1A2Q339	151-0508-01			TRANSISTOR:UJT,ST,T0-68	80009	151-0508-01
A7A1A2R108	315-0333-00			RES.,FXD,CMPSN:33K OHM,5%,0.25W	01121	CB3335
A7A1A2R109	315-0753-00			RES.,FXD,CMPSN:75K OHM,5%,0.25W	01121	CB7535
A7A1A2R142	315-0104-00			RES.,FXD,CMPSN:100K OHM,5%,0.25W	01121	CB1045
A7A1A2R207	307-0053-00			RES.,FXD,CMPSN:3.3 OHM,5%,0.50W	01121	EB33G5
A7A1A2R207	----- -----			(ENDED USAGE 670-6350-02 ONLY)		
A7A1A2R207	307-0093-00			RES.,FXD,CMPSN:1.2 OHM,5%,0.50W	01121	EB12G5
A7A1A2R207	----- -----			(BEGAN USAGE 670-6350-03 ONLY)		
A7A1A2R209	315-0220-00			RES.,FXD,CMPSN:22 OHM,5%,0.25W	01121	CB2205
A7A1A2R209	----- -----			(ENDED USAGE 670-6350-02 ONLY)		
A7A1A2R209	315-0101-00			RES.,FXD,CMPSN:100 OHM,5%,0.25W	01121	CB1015
A7A1A2R209	----- -----			(BEGAN USAGE 670-6350-03 ONLY)		
A7A1A2R248	315-0100-00			RES.,FXD,CMPSN:10 OHM,5%,0.25W	01121	CB1005
A7A1A2R305	315-0392-00			RES.,FXD,CMPSN:3.9K OHM,5%,0.25W	01121	CB3925
A7A1A2R307	307-0053-00			RES.,FXD,CMPSN:3.3 OHM,5%,0.50W	01121	EB33G5
A7A1A2R307	----- -----			(ENDED USAGE 670-6350-02 ONLY)		
A7A1A2R307	307-0093-00			RES.,FXD,CMPSN:1.2 OHM,5%,0.50W	01121	EB12G5
A7A1A2R307	----- -----			(BEGAN USAGE 670-6350-03 ONLY)		
A7A1A2R308	315-0220-00			RES.,FXD,CMPSN:22 OHM,5%,0.25W	01121	CB2205
A7A1A2R308	----- -----			(ENDED USAGE 670-6350-02 ONLY)		
A7A1A2R308	315-0101-00			RES.,FXD,CMPSN:100 OHM,5%,0.25W	01121	CB1015
A7A1A2R308	----- -----			(BEGAN USAGE 670-6350-03 ONLY)		

Component No.	Tektronix Part No.	Serial/Model No. Eff	Dscont	Name & Description	Mfr Code	Mfr Part Number
A7A1A2R312	315-0150-00			RES.,FXD,CMPSN:15 OHM,5%,0.25W	01121	CB1505
A7A1A2R318	315-0333-00			RES.,FXD,CMPSN:33K OHM,5%,0.25W	01121	CB3335
A7A1A2R339	315-0562-00			RES.,FXD,CMPSN:5.6K OHM,5%,0.25W	01121	CB5625
A7A1A2R345	315-0103-00			RES.,FXD,CMPSN:10K OHM,5%,0.25W	01121	CB1035
A7A1A2R355	315-0103-00			RES.,FXD,CMPSN:10K OHM,5%,0.25W	01121	CB1035
A7A1A2R361	321-0283-00			RES.,FXD,FILM:8.66K OHM,1%,0.125W	91637	CMF55116G86600F
A7A1A2R365	321-0405-00			RES.,FXD,FILM:162K OHM,1%,0.125W	91637	MFF1816G16202F
A7A1A2R409	315-0242-00			RES.,FXD,CMPSN:2.4K OHM,5%,0.25W	01121	CB2425
A7A1A2R415	315-0560-00			RES.,FXD,CMPSN:56 OHM,5%,0.25W	01121	CB5605
A7A1A2R416	315-0822-00			RES.,FXD,CMPSN:8.2K OHM,5%,0.25W	01121	CB8225
A7A1A2R418	315-0181-00			RES.,FXD,CMPSN:180 OHM,5%,0.25W	01121	CB1815
A7A1A2R419	321-0346-00			RES.,FXD,FILM:39.2K OHM,1%,0.125W	91637	CMF55116G32201F
A7A1A2R422	315-0223-00			RES.,FXD,CMPSN:22K OHM,5%,0.25W	01121	CB2235
A7A1A2R424	315-0104-00			RES.,FXD,CMPSN:100K OHM,5%,0.25W	01121	CB1045
A7A1A2R431	315-0473-00			RES.,FXD,CMPSN:47K OHM,5%,0.25W	01121	CB4735
A7A1A2R432	315-0471-00			RES.,FXD,CMPSN:470 OHM,5%,0.25W	01121	CB4715
A7A1A2R433	321-0318-00			RES.,FXD,FILM:20K OHM,1%,0.125W	91637	MFF1816G20001F
A7A1A2R436	315-0242-00			RES.,FXD,CMPSN:2.4K OHM,5%,0.25W	01121	CB2425
A7A1A2R438	321-0193-00			RES.,FXD,FILM:1K OHM,1%,0.125W	01121	ORD BY DESCR
A7A1A2R439	315-0302-00			RES.,FXD,CMPSN:3K OHM,5%,0.25W	01121	CB3025
A7A1A2R441	321-0010-00			RES.,FXD,FILM:12.4 OHM,1%,0.125W	91637	MFF1816G12R40F
A7A1A2R442	315-0104-00			RES.,FXD,CMPSN:100K OHM,5%,0.25W	01121	CB1045
A7A1A2R445	315-0364-00			RES.,FXD,CMPSN:360K OHM,5%,0.25W	01121	CB3645
A7A1A2R447	315-0103-00			RES.,FXD,CMPSN:10K OHM,5%,0.25W	01121	CB1035
A7A1A2R448	315-0182-00			RES.,FXD,CMPSN:1.8K OHM,5%,0.25W	01121	CB1825
A7A1A2R449	315-0564-00			RES.,FXD,CMPSN:560K OHM,5%,0.25W	01121	CB5645
A7A1A2R451	315-0684-00			RES.,FXD,CMPSN:680K OHM,5%,0.25W	01121	CB6845
A7A1A2R453	315-0754-00			RES.,FXD,CMPSN:750K OHM,5%,0.25W	01121	CB7545
A7A1A2R454	321-0383-00			RES.,FXD,FILM:95.3K OHM,1%,0.125W	91637	MFF1816G95301F
A7A1A2R456	321-0376-00			RES.,FXD,FILM:80.6K OHM,1%,0.125W	91637	MFF1816G80601F
A7A1A2R457	315-0202-00			RES.,FXD,CMPSN:2K OHM,5%,0.25W	01121	CB2025
A7A1A2R462	311-1417-00			RES.,VAR,NONWIR:2.5K OHM,10%,0.25W	73138	72-58-0
A7A1A2R463	311-1227-00			RES.,VAR,NONWIR:5K OHM,20%,0.50W	32997	3386F-T04-502
A7A1A2R464	321-0282-00			RES.,FXD,FILM:8.45K OHM,1%,0.125W	91637	MFF1816G84500F
A7A1A2R465	321-0282-00			RES.,FXD,FILM:8.45K OHM,1%,0.125W	91637	MFF1816G84500F
A7A1A2R466	315-0681-00			RES.,FXD,CMPSN:680 OHM,5%,0.25W	01121	CB6815
A7A1A2R467	321-0405-00			RES.,FXD,FILM:162K OHM,1%,0.125W	91637	MFF1816G16202F
A7A1A2R468	321-0295-00			RES.,FXD,FILM:11.5K OHM,1%,0.125W	91637	MFF1816G11501F
A7A1A2R469	321-0298-00			RES.,FXD,FILM:12.4K OHM,1%,0.125W	91637	MFF1816G12401F
A7A1A2T225	120-1382-00			TRANSFORMER,RF:BASE DRIVE,TOROID	80009	120-1382-00
A7A1A2T225	----- -----			(ENDED USAGE 670-6350-02 ONLY)		
A7A1A2T225	120-1469-00			TRANSFORMER,RF:BASE DRIVE,TOROID	80009	120-1469-00
A7A1A2T225	----- -----			(BEGAN USAGE 670-6350-03 ONLY)		
A7A1A2U409	155-0067-02			MICROCIRCUIT,DI:ML,POWER SPLY RGLTR 16 DIP	80009	155-0067-02
A7A1A2U409	----- -----			(BEGAN USAGE 670-6350-03 ONLY)		
A7A1A2U409	155-0067-03			MICROCIRCUIT,DI:ML,POWER SPLY RGLTR 16 DIP	80009	155-0067-03
A7A1A2U409	----- -----			(BEGAN USAGE 670-6350-03 ONLY)		
A7A1A2VR105	152-0241-00			SEMICOND DEVICE:ZENER,0.4W,33V,5%	04713	SZG35009K5
A7A1A2VR305	152-0195-01			SEMICOND DEVICE:ZENER,0.4W,5.1V,5%,TESTED	80009	152-0195-01
A7A1A2VR313	152-0149-01			SEMICOND DEVICE:ZENER,0.4W,10V,5%,TESTED	80009	152-0149-01
A7A1A2VR405	152-0265-00			SEMICOND DEVICE:ZENER,0.4W,24V,5%	04713	SZG35009K8
A7A1A2VR405	----- -----			(ENDED USAGE 670-6350-02 ONLY)		
A7A1A2VR405	152-0241-00			SEMICOND DEVICE:ZENER,0.4W,33V,5%	04713	SZG35009K5
A7A1A2VR405	----- -----			(BEGAN USAGE 670-6350-03 ONLY)		
A7A1A2VR434	152-0304-01			SEMICOND DEVICE:ZENER,0.4W,20V,5%,TESTED	80009	152-0304-01
A7A1A2VR465	152-0212-00			SEMICOND DEVICE:ZENER,0.5W,9V,5%	04713	SZ50646RL
A7A1A2VR466	152-0212-00			SEMICOND DEVICE:ZENER,0.5W,9V,5%	04713	SZ50646RL

Component No.	Tektronix Part No.	Serial/Model No. Eff	Dscont	Name & Description	Mfr Code	Mfr Part Number
A7A1A3	670-6357-00			CKT BOARD ASSY:POWER SUPPLY OUTPUT	80009	670-6357-00
A7A1A3C105	285-1171-00			CAP.,FXD,MTLZD:2 UF,10%,200 V	84411	X363UW(ADVISE)
A7A1A3C110	290-0806-00			CAP.,FXD,ELCTLT:3.3UF,+75-10%,350VDC	55680	UHU2V3RTEA
A7A1A3C122	290-0213-00			CAP.,FXD,ELCTLT:10UF,+50-10%,450V	56289	34D106F450GJ4
A7A1A3C123	283-0057-00			CAP.,FXD,CER DI:0.1UF,+80-20%,200V	56289	2C20Z5U104Z200B
A7A1A3C124	290-0746-00			CAP.,FXD,ELCTLT:47UF,+50-10%,16V	55680	ULA1C470TEA
A7A1A3C125	283-0068-00			CAP.,FXD,CER DI:0.01UF,+100-0%,500V	59660	871-533E103P
A7A1A3C127	281-0773-00			CAP.,FXD,CER DI:0.1UF,20%,50V	04222	MA205E104MAA
A7A1A3C131	290-0746-00			CAP.,FXD,ELCTLT:47UF,+50-10%,16V	55680	ULA1C470TEA
A7A1A3C133	283-0085-00			CAP.,FXD,CER DI:2700PF,5%,1000V	59660	818000B272J
A7A1A3C135	290-0746-00			CAP.,FXD,ELCTLT:47UF,+50-10%,16V	55680	ULA1C470TEA
A7A1A3C205	285-1121-00			CAP.,FXD,PLSTC:0.47UF,5%,200V	84411	TEK-150-47452
A7A1A3C228	281-0773-00			CAP.,FXD,CER DI:0.1UF,20%,50V	04222	MA205E104MAA
A7A1A3C320	283-0057-00			CAP.,FXD,CER DI:0.1UF,+80-20%,200V	56289	2C20Z5U104Z200B
A7A1A3C321	283-0189-00			CAP.,FXD,CER DI:0.1UF,20%,400V	56289	5C40X5R104M400B
A7A1A3C322	290-0012-00			CAP.,FXD,ELCTLT:2 X 40UF,+75-10%,250V	56289	D25815
A7A1A3C323	290-0012-00			CAP.,FXD,ELCTLT:2 X 40UF,+75-10%,250V	56289	D25815
A7A1A3C324	290-0818-01			CAP.,FXD,ELCTLT:390UF,+100-10%,40V	56289	672D397H040DS5C
A7A1A3C325	290-0818-01			CAP.,FXD,ELCTLT:390UF,+100-10%,40V	56289	672D397H040DS5C
A7A1A3C330	290-0412-00			CAP.,FXD,ELCTLT:100UF,+75-10%,150V	56289	60D1423DFP
A7A1A3C331	283-0057-00			CAP.,FXD,CER DI:0.1UF,+80-20%,200V	56289	2C20Z5U104Z200B
A7A1A3C332	283-0059-00			CAP.,FXD,CER DI:1UF,+80-20%,50V	51642	400050Z5U105Z
A7A1A3C333	283-0059-00			CAP.,FXD,CER DI:1UF,+80-20%,50V	51642	400050Z5U105Z
A7A1A3C401	283-0183-00			CAP.,FXD,CER DI:0.045UF,20%,500V	56289	275C10
A7A1A3C415	285-1153-00			CAP.,FXD,PLSTC:10UF,20%,100V	14752	A1523
A7A1A3C419	290-0800-00			CAP.,FXD,ELCTLT:250UF,+100-10%,20V	56289	672D257H0200M5C
A7A1A3C420	290-0818-01			CAP.,FXD,ELCTLT:390UF,+100-10%,40V	56289	672D397H040DS5C
A7A1A3C421	283-0059-00			CAP.,FXD,CER DI:1UF,+80-20%,50V	51642	400050Z5U105Z
A7A1A3C424	290-0800-00			CAP.,FXD,ELCTLT:250UF,+100-10%,20V	56289	672D257H0200M5C
A7A1A3C425	283-0057-00			CAP.,FXD,CER DI:0.1UF,+80-20%,200V	56289	2C20Z5U104Z200B
A7A1A3C430	290-0758-00			CAP.,FXD,ELCTLT:2.2UF,+50-10%,160V	56289	502D227
A7A1A3C431	283-0059-00			CAP.,FXD,CER DI:1UF,+80-20%,50V	51642	400050Z5U105Z
A7A1A3C519	290-0818-01			CAP.,FXD,ELCTLT:390UF,+100-10%,40V	56289	672D397H040DS5C
A7A1A3CR300	152-0400-00			SEMICOND DEVICE:SILICON,400V,1A	80009	152-0400-00
A7A1A3CR301	152-0400-00			SEMICOND DEVICE:SILICON,400V,1A	80009	152-0400-00
A7A1A3CR302	152-0400-00			SEMICOND DEVICE:SILICON,400V,1A	80009	152-0400-00
A7A1A3CR303	152-0400-00			SEMICOND DEVICE:SILICON,400V,1A	80009	152-0400-00
A7A1A3CR304	152-0400-00			SEMICOND DEVICE:SILICON,400V,1A	80009	152-0400-00
A7A1A3CR305	152-0400-00			SEMICOND DEVICE:SILICON,400V,1A	80009	152-0400-00
A7A1A3CR306	152-0400-00			SEMICOND DEVICE:SILICON,400V,1A	80009	152-0400-00
A7A1A3CR307	152-0400-00			SEMICOND DEVICE:SILICON,400V,1A	80009	152-0400-00
A7A1A3CR315	152-0661-00			SEMICOND DEVICE:RECT,SI,600V,3A,FAST	04713	MR856
A7A1A3CR316	152-0686-00			SEMICOND DEVICE:RECT,SI,100V,5A	04713	SR3273
A7A1A3CR317	152-0686-00			SEMICOND DEVICE:RECT,SI,100V,5A	04713	SR3273
A7A1A3CR318	152-0686-00			SEMICOND DEVICE:RECT,SI,100V,5A	04713	SR3273
A7A1A3CR319	152-0686-00			SEMICOND DEVICE:RECT,SI,100V,5A	04713	SR3273
A7A1A3CR320	152-0066-00			SEMICOND DVC DI:RECT,SI,400V,1A,D0-41	05828	GP10G-020
A7A1A3CR322	152-0066-00			SEMICOND DVC DI:RECT,SI,400V,1A,D0-41	05828	GP10G-020
A7A1A3CR323	152-0661-00			SEMICOND DEVICE:RECT,SI,600V,3A,FAST	04713	MR856
A7A1A3CR402	152-0400-00			SEMICOND DEVICE:SILICON,400V,1A	80009	152-0400-00
A7A1A3CR422	152-0400-00			SEMICOND DEVICE:SILICON,400V,1A	80009	152-0400-00
A7A1A3L309	108-0422-00			COIL,RF:FIXED,82UH	80009	108-0422-00

Component No.	Tektronix Part No.	Serial/Model No. Eff	Dscont	Name & Description	Mfr Code	Mfr Part Number
A7A1A3L310	108-0422-00			COIL,RF:FIXED,82UH	80009	108-0422-00
A7A1A3L311	108-0422-00			COIL,RF:FIXED,82UH	80009	108-0422-00
A7A1A3L315	108-0337-00			COIL,RF:25UH	80009	108-0337-00
A7A1A3L423	108-0337-00			COIL,RF:25UH	80009	108-0337-00
A7A1A3L424	108-0337-00			COIL,RF:25UH	80009	108-0337-00
A7A1A3R126	315-0474-00			RES.,FXD,CMPSN:470K OHM,5%,0.25W	01121	CB4745
A7A1A3R134	315-0473-00			RES.,FXD,CMPSN:47K OHM,5%,0.25W	01121	CB4735
A7A1A3R321	315-0274-00			RES.,FXD,CMPSN:270K OHM,5%,0.25W	01121	CB2745
A7A1A3R426	315-0204-00			RES.,FXD,CMPSN:200K OHM,5%,0.25W	01121	CB2045

Component No.	Tektronix Part No.	Serial/Model No. Eff	Dscont	Name & Description	Mfr Code	Mfr Part Number
A7A2A1	670-6354-00	B010100	B010154	CKT BOARD ASSY:HIGH VOLTAGE REGULATOR	80009	670-6354-00
A7A2A1	670-6354-02	B010155		CKT BOARD ASSY:HIGH VOLTAGE REGULATOR	80009	670-6354-02
A7A2A1C108	285-1211-00			CAP.,FXD,PLSTC:0.292UF,2%,400V	84411	X363UW-292424
A7A2A1C113	285-1090-00			CAP.,FXD,PLSTC:0.01UF,5%,1600V	19396	FP19-13951
A7A2A1C121	283-0208-00			CAP.,FXD,CER DI:0.22UF,10%,200V	72982	8151N230 C 224K
A7A2A1C141	283-0013-00			CAP.,FXD,CER DI:0.01UF,+100-0%,1000V	59660	818-602ZSUO103P
A7A2A1C151	283-0013-00			CAP.,FXD,CER DI:0.01UF,+100-0%,1000V	59660	818-602ZSUO103P
A7A2A1C152	283-0013-00			CAP.,FXD,CER DI:0.01UF,+100-0%,1000V	59660	818-602ZSUO103P
A7A2A1C208	285-0537-00			CAP.,FXD,PPR DI:0.5UF,20%,400V	14752	650BIB1E504
A7A2A1C241	290-0290-00			CAP.,FXD,ELCTLT:10UF,20%,25V	56289	30D472
A7A2A1C322	290-0771-00			CAP.,FXD,ELCTLT:220UF,+50-10%,10VDC	56289	502D231
A7A2A1C326	283-0111-00			CAP.,FXD,CER DI:0.1UF,20%,50V	96733	R2632
A7A2A1C331	283-0111-00			CAP.,FXD,CER DI:0.1UF,20%,50V	96733	R2632
A7A2A1C332	283-0238-00			CAP.,FXD,CER DI:0.01UF,10%,50V	72982	8121N075X7R0103K
A7A2A1C337	283-0065-01			CAP.,FXD,CER DI:0.001UF,5%,100V	59660	0835582Z5E00102J
A7A2A1C340	283-0111-00			CAP.,FXD,CER DI:0.1UF,20%,50V	96733	R2632
A7A2A1C341	283-0177-00			CAP.,FXD,CER DI:1UF,+80-20%,25V	04222	SR302E105ZAA
A7A2A1C348	283-0111-00			CAP.,FXD,CER DI:0.1UF,20%,50V	96733	R2632
A7A2A1C350	283-0256-00			CAP.,FXD,CER DI:130PF,5%,100V	51642	200-100N1500131J
A7A2A1C351	283-0211-00			CAP.,FXD,CER DI:0.1UF,10%,200V	04222	SR406C104KAA
A7A2A1C399	283-0594-00			CAP.,FXD,MICA D:0.001UF,1%,100V	00853	D151F102F0
A7A2A1C403	285-0933-00			CAP.,FXD,PLSTC:2UF,10%,400V	14752	C2477
A7A2A1C408	283-0177-00			CAP.,FXD,CER DI:1UF,+80-20%,25V	04222	SR302E105ZAA
A7A2A1C424	290-0932-00			CAP.,FXD ELECT:390UF,+ 100-10%,15VDC	90201	VPR391N01E1A3J
A7A2A1C425	290-0770-00			CAP.,FXD,ELCTLT:100UF,+50-10%,25V	56289	502D230
A7A2A1C426	283-0111-00			CAP.,FXD,CER DI:0.1UF,20%,50V	96733	R2632
A7A2A1C427	283-0111-00			CAP.,FXD,CER DI:0.1UF,20%,50V	96733	R2632
A7A2A1C429	290-0804-00			CAP.,FXD,ELCTLT:10UF,+50-10%,25V	55680	ULA1E100TEA
A7A2A1C434	283-0110-00			CAP.,FXD,CER DI:0.005UF,+80-20%,150V	59660	855-547-E-502Z
A7A2A1C440	283-0644-00			CAP.,FXD,MICA D:150PF,1%,500V	00853	D155F151F0
A7A2A1C441	283-0210-00			CAP.,FXD,CER DI:0.0056UF,20%,50V	56289	273C9
A7A2A1C442	283-0111-00			CAP.,FXD,CER DI:0.1UF,20%,50V	96733	R2632
A7A2A1C450	290-0804-00			CAP.,FXD,ELCTLT:10UF,+50-10%,25V	55680	ULA1E100TEA
A7A2A1C451	283-0176-00			CAP.,FXD,CER D1:0.0022UF,20%,50V	56289	272C5
A7A2A1C454	283-0177-00			CAP.,FXD,CER DI:1UF,+80-20%,25V	04222	SR302E105ZAA
A7A2A1C461	290-0770-00			CAP.,FXD,ELCTLT:100UF,+50-10%,25V	56289	502D230
A7A2A1C512	283-0013-00			CAP.,FXD,CER DI:0.01UF,+100-0%,1000V	59660	818-602ZSUO103P
A7A2A1C513	283-0013-00			CAP.,FXD,CER DI:0.01UF,+100-0%,1000V	59660	818-602ZSUO103P
A7A2A1C514	283-0013-00			CAP.,FXD,CER DI:0.01UF,+100-0%,1000V	59660	818-602ZSUO103P
A7A2A1C515	283-0013-00			CAP.,FXD,CER DI:0.01UF,+100-0%,1000V	59660	818-602ZSUO103P
A7A2A1C518	283-0013-00			CAP.,FXD,CER DI:0.01UF,+100-0%,1000V	59660	818-602ZSUO103P
A7A2A1C531	283-0238-00			CAP.,FXD,CER DI:0.01UF,10%,50V	72982	8121N075X7R0103K
A7A2A1C539	283-0065-01			CAP.,FXD,CER DI:0.001UF,5%,100V	59660	0835582Z5E00102J
A7A2A1C541	290-0745-00			CAP.,FXD,ELCTLT:22UF,+50-10%,25V	54473	ECE-A25V22L
A7A2A1C543	283-0212-00			CAP.,FXD,CER DI:2UF,20%,50V	51642	400-050-Z5U205M
A7A2A1C544	290-0745-00			CAP.,FXD,ELCTLT:22UF,+50-10%,25V	54473	ECE-A25V22L
A7A2A1C547	283-0111-00			CAP.,FXD,CER DI:0.1UF,20%,50V	96733	R2632
A7A2A1CR111	152-0789-00			SEMICOND DEVICE:SILICON,RECT,1000V,3.0A	04713	SR3681K
A7A2A1CR115	152-0398-01			SEMICOND DEVICE:SILICON,RECT,200V,1A,TEST	80009	152-0398-01
A7A2A1CR229	152-0141-02			SEMICOND DVC,DI:SW,SI,30V,150MA,30V,DO-35	01295	1N4152R
A7A2A1CR232	152-0141-02			SEMICOND DVC,DI:SW,SI,30V,150MA,30V,DO-35	01295	1N4152R
A7A2A1CR260	152-0141-02			SEMICOND DVC,DI:SW,SI,30V,150MA,30V,DO-35	01295	1N4152R
A7A2A1CR262	152-0141-02			SEMICOND DVC,DI:SW,SI,30V,150MA,30V,DO-35	01295	1N4152R
A7A2A1CR305	152-0661-00			SEMICOND DEVICE:RECT,SI,600V,3A,FAST	04713	MR856

Component No.	Tektronix Part No.	Serial/Model No. Eff	Dscont	Name & Description	Mfr Code	Mfr Part Number
A7A2A1CR321	152-0141-02			SEMICOND DVC,DI:SW,SI,30V,150MA,30V,DO-35	01295	1N4152R
A7A2A1CR322	152-0141-02			SEMICOND DVC,DI:SW,SI,30V,150MA,30V,DO-35	01295	1N4152R
A7A2A1CR327	152-0141-02			SEMICOND DVC,DI:SW,SI,30V,150MA,30V,DO-35	01295	1N4152R
A7A2A1CR333	152-0141-02			SEMICOND DVC,DI:SW,SI,30V,150MA,30V,DO-35	01295	1N4152R
A7A2A1CR335	152-0141-02			SEMICOND DVC,DI:SW,SI,30V,150MA,30V,DO-35	01295	1N4152R
A7A2A1CR341	152-0141-02			SEMICOND DVC,DI:SW,SI,30V,150MA,30V,DO-35	01295	1N4152R
A7A2A1CR352	152-0242-00			SEMICOND DVC:SIG,SI,225V,0.2A,D0-7	07263	FDH5004
A7A2A1CR352	----- -----			(ENDED USAGE 670-6354-00 ONLY)		
A7A2A1CR352	152-0242-02			SEMICOND DVC:DI:SELECTED	T0040	152-0242-02
A7A2A1CR352	----- -----			(BEGAN USAGE 670-6354-02 ONLY)		
A7A2A1CR355	152-0141-02			SEMICOND DVC,DI:SW,SI,30V,150MA,30V,DO-35	01295	1N4152R
A7A2A1CR361	152-0141-02			SEMICOND DVC,DI:SW,SI,30V,150MA,30V,DO-35	01295	1N4152R
A7A2A1CR362	152-0141-02			SEMICOND DVC,DI:SW,SI,30V,150MA,30V,DO-35	01295	1N4152R
A7A2A1CR401	152-0400-00			SEMICOND DEVICE:SILICON,400V,1A	80009	152-0400-00
A7A2A1CR406	152-0400-00			SEMICOND DEVICE:SILICON,400V,1A	80009	152-0400-00
A7A2A1CR416	152-0400-00			SEMICOND DEVICE:SILICON,400V,1A	80009	152-0400-00
A7A2A1CR426	152-0141-02			SEMICOND DVC,DI:SW,SI,30V,150MA,30V,DO-35	01295	1N4152R
A7A2A1CR426	----- -----			(BEGAN USAGE 670-6354-00 ONLY)		
A7A2A1CR444	152-0141-02			SEMICOND DVC,DI:SW,SI,30V,150MA,30V,DO-35	01295	1N4152R
A7A2A1CR448	152-0141-02			SEMICOND DVC,DI:SW,SI,30V,150MA,30V,DO-35	01295	1N4152R
A7A2A1CR449	152-0141-02			SEMICOND DVC,DI:SW,SI,30V,150MA,30V,DO-35	01295	1N4152R
A7A2A1CR456	152-0141-02			SEMICOND DVC,DI:SW,SI,30V,150MA,30V,DO-35	01295	1N4152R
A7A2A1CR457	152-0141-02			SEMICOND DVC,DI:SW,SI,30V,150MA,30V,DO-35	01295	1N4152R
A7A2A1CR511	152-0400-00			SEMICOND DEVICE:SILICON,400V,1A	80009	152-0400-00
A7A2A1CR512	152-0400-00			SEMICOND DEVICE:SILICON,400V,1A	80009	152-0400-00
A7A2A1CR515	152-0400-00			SEMICOND DEVICE:SILICON,400V,1A	80009	152-0400-00
A7A2A1CR516	152-0400-00			SEMICOND DEVICE:SILICON,400V,1A	80009	152-0400-00
A7A2A1CR517	152-0400-00			SEMICOND DEVICE:SILICON,400V,1A	80009	152-0400-00
A7A2A1CR537	152-0075-00			SEMICOND DEVICE:SW,GE,22V,40MA	14433	G866
A7A2A1CR537	----- -----			(ENDED USAGE 670-6354-00 ONLY)		
A7A2A1CR537	152-0537-00			SEMICOND DVC,DI:ZEN,SI,3.6V,10%,0.5W		
A7A2A1CR537	----- -----			(BEGAN USAGE 670-6354-02 ONLY)		
A7A2A1CR538	152-0141-02			SEMICOND DVC,DI:SW,SI,30V,150MA,30V,DO-35	01295	1N4152R
A7A2A1CR550	152-0141-02			SEMICOND DVC,DI:SW,SI,30V,150MA,30V,DO-35	01295	1N4152R
A7A2A1DS123	150-0030-00			LAMP,GLOW:NEON,T-2,60 TO 90 VOLTS	74276	NE2V-T
A7A2A1DS124	150-0030-00			LAMP,GLOW:NEON,T-2,60 TO 90 VOLTS	74276	NE2V-T
A7A2A1DS251	150-0021-00			LAMP,GLOW:0.4MA	58224	NE-76
A7A2A1L510	108-0473-00			COIL,RF:150UH	80009	108-0473-00
A7A2A1Q225	151-0335-00			TRANSISTOR:SILICON,PNP	04713	SJE917
A7A2A1Q228	151-0613-00			TRANSISTOR:NPN,SI,SJE1657,TO-126	04713	SJE1657
A7A2A1Q304	151-0678-00			TRANSISTOR:SILICON,NPN	04713	MJE13005
A7A2A1Q321	151-0301-02			TRANSISTOR:SILICON,PNP	04713	2N2907A
A7A2A1Q327	151-0613-00			TRANSISTOR:NPN,SI,SJE1657,TO-126	04713	SJE1657
A7A2A1Q328	151-0302-01			TRANSISTOR:SILICON,NPN,SEL	80009	151-0302-01
A7A2A1Q331	151-0302-01			TRANSISTOR:SILICON,NPN,SEL	80009	151-0302-01
A7A2A1Q332	151-0302-01			TRANSISTOR:SILICON,NPN,SEL	80009	151-0302-01
A7A2A1Q334	151-0216-02			TRANSISTOR:PNP,SI PRESTRESSED & TESTED	80009	151-0216-02
A7A2A1Q352	151-0192-03			TRANSISTOR:SILICON,NPN	80009	151-0192-03
A7A2A1Q355	151-0188-03			TRANSISTOR:SILICON,PNP,SEL	80009	151-0188-03
A7A2A1Q359	151-0190-07			TRANSISTOR:SILICON,NPN,SEL	80009	151-0190-07
A7A2A1Q425	151-0407-00			TRANSISTOR:SILICON,NPN	04713	SS2456
A7A2A1Q437	151-0192-03			TRANSISTOR:SILICON,NPN	80009	151-0192-03
A7A2A1Q438	151-0190-07			TRANSISTOR:SILICON,NPN,SEL	80009	151-0190-07
A7A2A1Q532	151-0190-07			TRANSISTOR:SILICON,NPN,SEL	80009	151-0190-07

Component No.	Tektronix Part No.	Serial/Model No. Eff	Dscont	Name & Description	Mfr Code	Mfr Part Number
A7A2A1Q533	151-0188-03			TRANSISTOR:SILICON,PNP,SEL	80009	151-0188-03
A7A2A1R122	308-0488-00			RES.,FXD,WW:5 OHM,1%,2.5W	91637	RS2B-D5R000F
A7A2A1R125	308-0488-00			RES.,FXD,WW:5 OHM,1%,2.5W	91637	RS2B-D5R000F
A7A2A1R129	303-0102-00			RES.,FXD,CMPSN:1K OHM,5%,1W	01121	GB1025
A7A2A1R131	303-0224-00			RES.,FXD,CMPSN:220K OHM,5%,1W	01121	GB2245
A7A2A1R138	311-1968-00			RES.,VAR,NONWIR:PNL,5M OHM,20%,0.50W	01121	72M4N048S505M
A7A2A1R142	301-0474-00			RES.,FXD,CMPSN:470K OHM,5%,0.50W	01121	EB4745
A7A2A1R148	311-1968-00			RES.,VAR,NONWIR:PNL,5M OHM,20%,0.50W	01121	72M4N048S505M
A7A2A1R158	311-1968-00			RES.,VAR,NONWIR:PNL,5M OHM,20%,0.50W	01121	72M4N048S505M
A7A2A1R162	301-0474-00			RES.,FXD,CMPSN:470K OHM,5%,0.50W	01121	EB4745
A7A2A1R231	321-0481-00			RES.,FXD,FILM:1M OHM,1%,0.125W	91637	CMF55116G10003F
A7A2A1R232	315-0103-00			RES.,FXD,CMPSN:10K OHM,5%,0.25W	01121	CB1035
A7A2A1R232	----- -----			(ENDED USAGE 670-6354-00 ONLY)		
A7A2A1R232	315-0912-00			RES.,FXD,CMPSN:9.1K OHM,5%,0.25W	01121	CB9125
A7A2A1R232	----- -----			(BEGAN USAGE 670-6354-02 ONLY)		
A7A2A1R233	321-0338-00			RES.,FXD,FILM:32.4K OHM,1%,0.125W	91637	MFF1816G32401F
A7A2A1R234	315-0122-00			RES.,FXD,CMPSN:1.2K OHM,5%,0.25W	01121	CB1225
A7A2A1R235	315-0114-00			RES.,FXD,CMPSN:110K OHM,5%,0.25W	01121	CB1145
A7A2A1R236	315-0622-00			RES.,FXD,CMPSN:6.2K OHM,5%,0.25W	01121	CB6225
A7A2A1R251	315-0103-00			RES.,FXD,CMPSN:10K OHM,5%,0.25W	01121	CB1035
A7A2A1R256	315-0202-00			RES.,FXD,CMPSN:2K OHM,5%,0.25W	01121	CB2025
A7A2A1R258	315-0681-00			RES.,FXD,CMPSN:680 OHM,5%,0.25W	01121	CB6815
A7A2A1R260	315-0101-00			RES.,FXD,CMPSN:100 OHM,5%,0.25W	01121	CB1015
A7A2A1R265	315-0103-00			RES.,FXD,CMPSN:10K OHM,5%,0.25W	01121	CB1035
A7A2A1R320	308-0793-00			RES.,FXD,WW:0.51 OHM,5%,0.50W	75042	BW20 .51 OHM 5%
A7A2A1R325	315-0273-00			RES.,FXD,CMPSN:27K OHM,5%,0.25W	01121	CB2735
A7A2A1R327	315-0301-00			RES.,FXD,CMPSN:300 OHM,5%,0.25W	01121	CB3015
A7A2A1R330	315-0153-00			RES.,FXD,CMPSN:15K OHM,5%,0.25W	01121	CB1535
A7A2A1R332	315-0472-00			RES.,FXD,CMPSN:4.7K OHM,5%,0.25W	01121	CB4725
A7A2A1R333	315-0103-00			RES.,FXD,CMPSN:10K OHM,5%,0.25W	01121	CB1035
A7A2A1R334	315-0472-00			RES.,FXD,CMPSN:4.7K OHM,5%,0.25W	01121	CB4725
A7A2A1R336	315-0334-00			RES.,FXD,CMPSN:330K OHM,5%,0.25W	01121	CB3345
A7A2A1R338	315-0102-00			RES.,FXD,CMPSN:1K OHM,5%,0.25W	01121	CB1025
A7A2A1R339	315-0622-00			RES.,FXD,CMPSN:6.2K OHM,5%,0.25W	01121	CB6225
A7A2A1R341	315-0103-00			RES.,FXD,CMPSN:10K OHM,5%,0.25W	01121	CB1035
A7A2A1R342	315-0103-00			RES.,FXD,CMPSN:10K OHM,5%,0.25W	01121	CB1035
A7A2A1R342	----- -----			(ENDED USAGE 670-6354-00 ONLY)		
A7A2A1R342	315-0303-00			RES.,FXD,CMPSN:30K OHM,5%,0.25W	01121	CB3035
A7A2A1R342	----- -----			(BEGAN USAGE 670-6354-02 ONLY)		
A7A2A1R345	321-0302-00			RES.,FXD,FILM:13.7K OHM,1%,0.125W	91637	MFF1816G13701F
A7A2A1R346	321-0391-00			RES.,FXD,FILM:115K OHM,1%,0.125K	91637	MFF1816G11502F
A7A2A1R347	315-0105-00			RES.,FXD,CMPSN:1M OHM,5%,0.25W	01121	CB1055
A7A2A1R349	311-0605-00			RES.,VAR,NONWIR:TRMR,200 OHM,0.5W	73138	82-23-2
A7A2A1R350	315-0102-00			RES.,FXD,CMPSN:1K OHM,5%,0.25W	01121	CB1025
A7A2A1R351	315-0223-00			RES.,FXD,CMPSN:22K OHM,5%,0.25W	01121	CB2235
A7A2A1R352	315-0133-00			RES.,FXD,CMPSN:13K OHM,5%,0.25W	01121	CB1335
A7A2A1R353	315-0225-00			RES.,FXD,CMPSN:2.2M OHM,5%,0.25W	01121	CB2255
A7A2A1R356	315-0103-00			RES.,FXD,CMPSN:10K OHM,5%,0.25W	01121	CB1035
A7A2A1R357	315-0223-00			RES.,FXD,CMPSN:22K OHM,5%,0.25W	01121	CB2235
A7A2A1R360	315-0332-00			RES.,FXD,CMPSN:3.3K OHM,5%,0.25W	01121	CB3325
A7A2A1R362	315-0470-00			RES.,FXD,CMPSN:47 OHM,5%,0.25W	01121	CB4705
A7A2A1R364	315-0332-00			RES.,FXD,CMPSN:3.3K OHM,5%,0.25W	01121	CB3325
A7A2A1R406	315-0271-00			RES.,FXD,CMPSN:270 OHM,5%,0.25W	01121	CB2715
A7A2A1R417	315-0202-00			RES.,FXD,CMPSN:2K OHM,5%,0.25W	01121	CB2025

Component No.	Tektronix Part No.	Serial/Model No. Eff	Dscont	Name & Description	Mfr Code	Mfr Part Number
A7A2A1R421	301-0390-00			RES.,FXD,CMPSN:39 OHM,5%,0.5W	01121	EB3905
A7A2A1R422	308-0836-00			RES.,FXD,WW:1.2 OHM,5%,1W,FUSIBLE	75042	BW-20F-1.2 OHM
A7A2A1R425	315-0104-00	B010152		RES.,FXD,CMPSN:100K OHM,5%,0.25W	01121	CB1045
A7A2A1R426	315-0243-00	B010100	B010151	RES.,FXD,CMPSN:24K OHM,5%,0.25W	01121	CB2435
A7A2A1R427	321-0393-00	B010100	B010151	RES.,FXD,FILM:121K OHM,1%,0.125W	91637	CMF55116G12102F
A7A2A1R427	321-0332-00	B010152		RES.,FXD,FILM:28K OHM,1%,0.125W	91637	MFF1816G28001F
A7A2A1R430	315-0202-00			RES.,FXD,CMPSN:2K OHM,5%,0.25W	01121	CB2025
A7A2A1R431	321-0372-00	B010100	B010151	RES.,FXD,FILM:73.2K OHM,1%,0.125W	91637	MFF1816G73201F
A7A2A1R431	321-0431-00	B010152		RES.,FXD,FILM:301K OHM,1%,0.125W	91637	MFF1816G30102F
A7A2A1R432	315-0101-00			RES.,FXD,CMPSN:100 OHM,5%,0.25W	01121	CB1015
A7A2A1R433	311-1035-00			RES.,VAR,NONWIR:50K OHM,10%,0.50W	73138	82-40-0
A7A2A1R434	311-0633-00			RES.,VAR,NONWIR:5K OHM,10%,0.50W	73138	82-30-1
A7A2A1R435	315-0912-00			RES.,FXD,CMPSN:9.1K OHM,5%,0.25W	01121	CB9125
A7A2A1R436	315-0392-00			RES.,FXD,CMPSN:3.9K OHM,5%,0.25W	01121	CB3925
A7A2A1R438	315-0333-00			RES.,FXD,CMPSN:33K OHM,5%,0.25W	01121	CB3335
A7A2A1R439	315-0102-00			RES.,FXD,CMPSN:1K OHM,5%,0.25W	01121	CB1025
A7A2A1R442	315-0623-00			RES.,FXD,CMPSN:62K OHM,5%,0.25W	01121	CB6235
A7A2A1R443	315-0113-00			RES.,FXD,CMPSN:11K OHM,5%,0.25W	01121	CB1135
A7A2A1R444	315-0151-00			RES.,FXD,CMPSN:150 OHM,5%,0.25W	01121	CB1515
A7A2A1R446	315-0103-00			RES.,FXD,CMPSN:10K OHM,5%,0.25W	01121	CB1035
A7A2A1R447	315-0202-00			RES.,FXD,CMPSN:2K OHM,5%,0.25W	01121	CB2025
A7A2A1R451	321-0280-00			RES.,FXD,FILM:8.06K OHM,1%,0.125W	91637	MFF1816G80600F
A7A2A1R452	311-1230-00			RES.,VAR,NONWIR:20K OHM,20%,0.50W	32997	3386F-T04-203
A7A2A1R455	321-0231-00			RES.,FXD,FILM:2.49K OHM,1%,0.125W	91637	MFF1816G24900F
A7A2A1R500	301-0150-00			RES.,FXD,CMPSN:15 OHM,5%,0.5W	01121	EB1505
A7A2A1R508	301-0100-00			RES.,FXD,CMPSN:10 OHM,5%,0.50W	01121	EB1005
A7A2A1R528	315-0102-00			RES.,FXD,CMPSN:1K OHM,5%,0.25W	01121	CB1025
A7A2A1R529	301-0161-00			RES.,FXD,CMPSN:160 OHM,5%,0.5W	01121	EB1615
A7A2A1R532	315-0153-00			RES.,FXD,CMPSN:15K OHM,5%,0.25W	01121	CB1535
A7A2A1R540	315-0104-00			RES.,FXD,CMPSN:100K OHM,5%,0.25W	01121	CB1045
A7A2A1R541	315-0473-00			RES.,FXD,CMPSN:47K OHM,5%,0.25W	01121	CB4735
A7A2A1R542	315-0431-00			RES.,FXD,CMPSN:430 OHM,5%,0.25W	01121	CB4315
A7A2A1R542	----- -----			(ENDED USAGE 670-6354-00 ONLY)		
A7A2A1R542	315-0201-00			RES.,FXD,CMPSN:200 OHM,5%,0.25W	01121	CB2015
A7A2A1R542	----- -----			(BEGAN USAGE 670-6354-02 ONLY)		
A7A2A1R543	315-0391-00			RES.,FXD,CMPSN:390 OHM,5%,0.25W	01121	CB3915
A7A2A1R544	315-0512-00			RES.,FXD,CMPSN:5.1K OHM,5%,0.25W	01121	CB5125
A7A2A1R548	315-0272-00			RES.,FXD,CMPSN:2.7K OHM,5%,0.25W	01121	CB2725
A7A2A1R549	315-0473-00			RES.,FXD,CMPSN:47K OHM,5%,0.25W	01121	CB4735
A7A2A1R550	311-1560-00			RES.,VAR,NONWIR:5K OHM,20%,0.50W	73138	91-82-0
A7A2A1T128	120-1366-00			TRANSFORMER,RF:DRIVER	80009	120-1366-00
A7A2A1T315	108-1073-00			COIL,RF:FIXED,7MH	80009	108-1073-00
A7A2A1T415	120-1363-00			TRANSFORMER,RF:SWITCHER	80009	120-1363-00
A7A2A1U342	156-0704-00			MICROCIRCUIT,LI:PHASE LOCK LOOP	04713	MC14046CP
A7A2A1U445	156-0933-00			MICROCIRCUIT,LI:REGULATOR,PULSE WIDTH MOD	80009	156-0933-00
A7A2A1VR238	152-0195-01			SEMICOND DEVICE:ZENER,0.4W,5.1V,5%,TESTED	80009	152-0195-01
A7A2A1VR251	152-0195-01			SEMICOND DEVICE:ZENER,0.4W,5.1V,5%,TESTED	80009	152-0195-01
A7A2A1VR434	152-0306-00			SEMICOND DEVICE:ZENER,0.4W,9.1V,5%	15238	Z5409
A7A2A1VR451	152-0411-00			SEMICOND DEVICE:ZENER,0.25W,9V,5%	04713	SZ12483KRL
A7A2A1R542	----- -----			(ENDED USAGE 670-6354-00 ONLY)		

Component No.	Tektronix Part No.	Serial/Model No. Eff	Dscont	Name & Description	Mfr Code	Mfr Part Number
A7A2A2	119-1409-00			HV FOCUS ASSY:	80009	119-1409-00
A7A2A2C241	283-0083-00			CAP.,FXD,CER DI:0.0047UF,20%,500V	72982	811-565C471J
A7A2A2R260	311-2014-00			RES.,VAR,NONWIR:TRMR,15M OHM,20%,1W,3KV	11502	OBD
A7A2A2R261	303-0473-02			RES,FXD,CMPSN:47K OHM,5% 1W	01121	GB4735
A7A2A3	119-1441-00	B010100	B010151	PWR SPLY SUBAS:30KV	80009	119-1441-00
A7A2A3	119-1441-02	B010152	B029999	POWER SUPPLY SUB ASSY:30KV	80009	119-1441-02
A7A2A3	119-1441-04	B030000		POWER SUPPLY SUB ASSY:30KV	80009	119-1441-04
A7A2A3Q100	151-0747-00			TRANSISTOR:SILICON,NPN	04713	SJ6926
A7A2A3R100	307-0063-00			RES.,FXD,CMPSN:9.1 OHM,5%,0.50W	01121	EB91G5
A7A2A3T100	119-1441-00			PWR SPLY SUBAS:30KV	80009	119-1441-00
A8	672-0973-00	B010100	B010134	MODULE ASSY:CONTROL DRAWER	80009	672-0973-00
A8	672-0973-01	B010135	B010159	MODULE ASSY:CONTROL DRAWER	80009	672-0973-01
A8	672-0973-02	B010160	B020794	CKT BOARD ASSY:CONTROL DRAWER	80009	672-0973-02
A8	672-0973-03	B020795		CKT BOARD ASSY:CONTROL DRAWER	80009	672-0973-03
A8DS618	198-4413-00			WIRE SET,ELEC:	80009	198-4413-00
A8DS619	198-4419-00			WIRE SET,ELEC:	80009	198-4419-00
A8J270	175-4157-00			CABLE ASSY,RF:75 OHM COAX,23.0 L,9-4	80009	175-4157-00
A8A1	670-6362-00	B010100	B010159	CKT BOARD ASSY:CONVERGENCE CONTROL	80009	670-6362-00
A8A1	670-6362-01	B010160	B020749	CKT BOARD ASSY:CONVERGENCE CONTROL	80009	670-6362-01
A8A1	670-6362-03	B020750		CKT BOARD ASSY:CONVERGENCE CONTROL	80009	670-6362-03
A8A1C105	283-0648-00			CAP.,FXD,MICA D:10PF,5%,100V	00853	D151C100D0
A8A1C108	283-0648-00			CAP.,FXD,MICA D:10PF,5%,100V	00853	D151C100D0
A8A1C109	283-0646-00			CAP.,FXD,MICA D:170PF,1%,100V	00853	D155F171F0
A8A1C113	283-0785-00			CAP.,FXD,MICA D:250PF,1%,500V	09023	CD15FD251F03
A8A1C114	281-0775-00			CAP.,FXD,CER DI:0.1UF,20%,50V	04222	MA205E104MAA
A8A1C115	281-0775-00			CAP.,FXD,CER DI:0.1UF,20%,50V	04222	MA205E104MAA
A8A1C116	281-0775-00			CAP.,FXD,CER DI:0.1UF,20%,50V	04222	MA205E104MAA
A8A1C117	281-0775-00			CAP.,FXD,CER DI:0.1UF,20%,50V	04222	MA205E104MAA
A8A1C204	283-0648-00			CAP.,FXD,MICA D:10PF,5%,100V	00853	D151C100D0
A8A1C206	283-0788-00			CAP.,FXD,MICA D:267PF,1%,500V	09023	CD15FD(267)F03
A8A1C210	281-0775-00			CAP.,FXD,CER DI:0.1UF,20%,50V	04222	MA205E104MAA
A8A1C211	281-0775-00			CAP.,FXD,CER DI:0.1UF,20%,50V	04222	MA205E104MAA
A8A1C304	283-0648-00			CAP.,FXD,MICA D:10PF,5%,100V	00853	D151C100D0
A8A1C308	283-0788-00			CAP.,FXD,MICA D:267PF,1%,500V	09023	CD15FD(267)F03
A8A1C310	281-0775-00			CAP.,FXD,CER DI:0.1UF,20%,50V	04222	MA205E104MAA
A8A1C311	281-0775-00			CAP.,FXD,CER DI:0.1UF,20%,50V	04222	MA205E104MAA
A8A1C315	290-0747-00			CAP.,FXD,ELCTLT:100UF,+50-10%,25V	56289	500D148
A8A1C316	290-0747-00			CAP.,FXD,ELCTLT:100UF,+50-10%,25V	56289	500D148
A8A1C404	283-0648-00			CAP.,FXD,MICA D:10PF,5%,100V	00853	D151C100D0
A8A1C406	281-0775-00			CAP.,FXD,CER DI:0.1UF,20%,50V	04222	MA205E104MAA
A8A1C408	281-0775-00			CAP.,FXD,CER DI:0.1UF,20%,50V	04222	MA205E104MAA
A8A1C410	283-0059-00			CAP.,FXD,CER DI:1UF,+80-20%,50V	51642	400050Z5U105Z
A8A1C507	283-0648-00			CAP.,FXD,MICA D:10PF,5%,100V	00853	D151C100D0
A8A1C512	281-0775-00			CAP.,FXD,CER DI:0.1UF,20%,50V	04222	MA205E104MAA
A8A1C513	281-0775-00			CAP.,FXD,CER DI:0.1UF,20%,50V	04222	MA205E104MAA
A8A1C514	283-0059-00			CAP.,FXD,CER DI:1UF,+80-20%,50V	51642	400050Z5U105Z
A8A1C520	290-0747-00			CAP.,FXD,ELCTLT:100UF,+50-10%,25V	56289	500D148
A8A1C522	290-0747-00			CAP.,FXD,ELCTLT:100UF,+50-10%,25V	56289	500D148
A8A1C524	290-0747-00			CAP.,FXD,ELCTLT:100UF,+50-10%,25V	56289	500D148
A8A1C526	290-0747-00			CAP.,FXD,ELCTLT:100UF,+50-10%,25V	56289	500D148
A8A1C528	290-0747-00			CAP.,FXD,ELCTLT:100UF,+50-10%,25V	56289	500D148

Component No.	Tektronix Part No.	Serial/Model No. Eff	Dscont	Name & Description	Mfr Code	Mfr Part Number
A8A1C530	290-0747-00			CAP.,FXD,ELCTLT:100UF,+50-10%,25V	56289	500D148
A8A1C532	290-0747-00			CAP.,FXD,ELCTLT:100UF,+50-10%,25V	56289	500D148
A8A1C534	290-0747-00			CAP.,FXD,ELCTLT:100UF,+50-10%,25V	56289	500D148
A8A1C535	283-0784-00			CAP.,FXD,MICA D:40 PF,2%,500V	09023	CD15ED400G03
A8A1C638	281-0775-00			CAP.,FXD,CER DI:0.1UF,20%,50V	04222	MA205E104MAA
A8A1C644	281-0775-00			CAP.,FXD,CER DI:0.1UF,20%,50V	04222	MA205E104MAA
A8A1C728	281-0775-00			CAP.,FXD,CER DI:0.1UF,20%,50V	04222	MA205E104MAA
A8A1C818	281-0775-00			CAP.,FXD,CER DI:0.1UF,20%,50V	04222	MA205E104MAA
A8A1C828	281-0775-00			CAP.,FXD,CER DI:0.1UF,20%,50V	04222	MA205E104MAA
A8A1C918	281-0775-00			CAP.,FXD,CER DI:0.1UF,20%,50V	04222	MA205E104MAA
A8A1DS718	150-1064-00			LT EMITTING DIO:YELLOW,585NM,40 MA MAX	50522	MV5374C
A8A1R103	321-0306-00			RES.,FXD,FILM:15K OHM,1%,0.125W	91637	MFF1816G15001F
A8A1R104	321-0306-00			RES.,FXD,FILM:15K OHM,1%,0.125W	91637	MFF1816G15001F
A8A1R105	315-0472-00			RES.,FXD,CMPSN:4.7K OHM,5%,0.25W	01121	CB4725
A8A1R106	321-0298-00			RES.,FXD,FILM:12.4K OHM,1%,0.125W	91637	MFF1816G12401F
A8A1R107	321-0298-00			RES.,FXD,FILM:12.4K OHM,1%,0.125W	91637	MFF1816G12401F
A8A1R108	315-0472-00			RES.,FXD,CMPSN:4.7K OHM,5%,0.25W	01121	CB4725
A8A1R113	321-0267-00			RES.,FXD,FILM:5.9K OHM,1%,0.125W	91637	MFF1816G59000F
A8A1R114	321-0247-00			RES.,FXD,FILM:3.65K OHM,1%,0.125W	91637	MFF1816G36500F
A8A1R120	311-2110-00			RES.,VAR,NONWIR:PNL,10K OHM,10%,0.5W	12697	CM41778
A8A1R122	321-0414-00			RES.,FXD,FILM:200K OHM,1%,0.125W	91637	MFF1816G20002F
A8A1R124	321-0414-00			RES.,FXD,FILM:200K OHM,1%,0.125W	91637	MFF1816G20002F
A8A1R125	311-2110-00			RES.,VAR,NONWIR:PNL,10K OHM,10%,0.5W	12697	CM41778
A8A1R126	321-0414-00			RES.,FXD,FILM:200K OHM,1%,0.125W	91637	MFF1816G20002F
A8A1R128	321-0414-00			RES.,FXD,FILM:200K OHM,1%,0.125W	91637	MFF1816G20002F
A8A1R130	311-2110-00			RES.,VAR,NONWIR:PNL,10K OHM,10%,0.5W	12697	CM41778
A8A1R132	321-0402-00	B010100	B010158	RES.,FXD,FILM:150K OHM,1%,0.125W	24546	NA55D1503F
A8A1R132	321-0393-00	B010159		RES.,FXD,FILM:121K OHM,1%,0.125W	91637	CMF55116G12102F
A8A1R134	321-0402-00	B010100	B010158	RES.,FXD,FILM:150K OHM,1%,0.125W	24546	NA55D1503F
A8A1R134	321-0393-00	B010159		RES.,FXD,FILM:121K OHM,1%,0.125W	91637	CMF55116G12102F
A8A1R135	311-2110-00			RES.,VAR,NONWIR:PNL,10K OHM,10%,0.5W	12697	CM41778
A8A1R136	321-0402-00	B010100	B010158	RES.,FXD,FILM:150K OHM,1%,0.125W	24546	NA55D1503F
A8A1R136	321-0393-00	B010159		RES.,FXD,FILM:121K OHM,1%,0.125W	91637	CMF55116G12102F
A8A1R138	321-0402-00	B010100	B010158	RES.,FXD,FILM:150K OHM,1%,0.125W	24546	NA55D1503F
A8A1R138	321-0393-00	B010159		RES.,FXD,FILM:121K OHM,1%,0.125W	91637	CMF55116G12102F
A8A1R140	311-2110-00			RES.,VAR,NONWIR:PNL,10K OHM,10%,0.5W	12697	CM41778
A8A1R142	321-0356-00	B010100	B010158	RES.,FXD,FILM:49.9K OHM,1%,0.125W	91637	MFF1816G49901F
A8A1R142	321-0346-00	B010159		RES.,FXD,FILM:39.2K OHM,1%,0.125W	91637	CMF55116G32201F
A8A1R144	321-0356-00	B010100	B010158	RES.,FXD,FILM:49.9K OHM,1%,0.125W	91637	MFF1816G49901F
A8A1R144	321-0346-00	B010159		RES.,FXD,FILM:39.2K OHM,1%,0.125W	91637	CMF55116G32201F
A8A1R145	311-2110-00			RES.,VAR,NONWIR:PNL,10K OHM,10%,0.5W	12697	CM41778
A8A1R146	321-0356-00	B010100	B010158	RES.,FXD,FILM:49.9K OHM,1%,0.125W	91637	MFF1816G49901F
A8A1R146	321-0346-00	B010159		RES.,FXD,FILM:39.2K OHM,1%,0.125W	91637	CMF55116G32201F
A8A1R148	321-0356-00	B010100	B010158	RES.,FXD,FILM:49.9K OHM,1%,0.125W	91637	MFF1816G49901F
A8A1R148	321-0346-00	B010159		RES.,FXD,FILM:39.2K OHM,1%,0.125W	91637	CMF55116G32201F
A8A1R150	311-2110-00			RES.,VAR,NONWIR:PNL,10K OHM,10%,0.5W	12697	CM41778
A8A1R152	321-0335-00	B010100	B010158	RES.,FXD,FILM:30.1K OHM,1%,0.125W	91637	CMF55116G30101F
A8A1R152	321-0324-00	B010159		RES.,FXD,FILM:23.2K OHM,1%,0.125W	91637	MFF1816G23201F
A8A1R154	321-0335-00	B010100	B010158	RES.,FXD,FILM:30.1K OHM,1%,0.125W	91637	CMF55116G30101F
A8A1R154	321-0324-00	B010159		RES.,FXD,FILM:23.2K OHM,1%,0.125W	91637	MFF1816G23201F
A8A1R155	311-2110-00			RES.,VAR,NONWIR:PNL,10K OHM,10%,0.5W	12697	CM41778
A8A1R156	321-0385-00			RES.,FXD,FILM:100K OHM,1%,0.125W	91637	MFF1816G10002F
A8A1R158	321-0385-00			RES.,FXD,FILM:100K OHM,1%,0.125W	91637	MFF1816G10002F
A8A1R160	311-2110-00			RES.,VAR,NONWIR:PNL,10K OHM,10%,0.5W	12697	CM41778

Component No.	Tektronix Part No.	Serial/Model No. Eff	Dscont	Name & Description	Mfr Code	Mfr Part Number
A8A1R162	321-0356-00	B010100	B010158	RES.,FXD,FILM:49.9K OHM,1%,0.125W	91637	MFF1816G49901F
A8A1R162	321-0346-00	B010159		RES.,FXD,FILM:39.2K OHM,1%,0.125W	91637	CMF55116G32201F
A8A1R164	321-0356-00	B010100	B010158	RES.,FXD,FILM:49.9K OHM,1%,0.125W	91637	MFF1816G49901F
A8A1R164	321-0346-00	B010159		RES.,FXD,FILM:39.2K OHM,1%,0.125W	91637	CMF55116G32201F
A8A1R165	311-2110-00			RES.,VAR,NONWIR:PNL,10K OHM,10%,0.5W	12697	CM41778
A8A1R166	321-0356-00	B010100	B010158	RES.,FXD,FILM:49.9K OHM,1%,0.125W	91637	MFF1816G49901F
A8A1R166	321-0346-00	B010159		RES.,FXD,FILM:39.2K OHM,1%,0.125W	91637	CMF55116G32201F
A8A1R168	321-0356-00	B010100	B010158	RES.,FXD,FILM:49.9K OHM,1%,0.125W	91637	MFF1816G49901F
A8A1R168	321-0346-00	B010159		RES.,FXD,FILM:39.2K OHM,1%,0.125W	91637	CMF55116G32201F
A8A1R202	321-0289-00			RES.,FXD,FILM:10K OHM,1%,0.125W	91637	MFF1816G10001F
A8A1R203	321-0289-00			RES.,FXD,FILM:10K OHM,1%,0.125W	91637	MFF1816G10001F
A8A1R204	315-0472-00			RES.,FXD,CMPSN:4.7K OHM,5%,0.25W	01121	CB4725
A8A1R208	321-0225-00			RES.,FXD,FILM:2.15K OHM,1%,0.125W	91637	MFF1816G21500F
A8A1R220	311-2110-00			RES.,VAR,NONWIR:PNL,10K OHM,10%,0.5W	12697	CM41778
A8A1R222	321-0335-00			RES.,FXD,FILM:30.1K OHM,1%,0.125W	91637	CMF55116G30101F
A8A1R225	311-2110-00			RES.,VAR,NONWIR:PNL,10K OHM,10%,0.5W	12697	CM41778
A8A1R226	321-0414-00			RES.,FXD,FILM:200K OHM,1%,0.125W	91637	MFF1816G20002F
A8A1R230	311-2110-00			RES.,VAR,NONWIR:PNL,10K OHM,10%,0.5W	12697	CM41778
A8A1R232	321-0335-00	B010100	B010158	RES.,FXD,FILM:30.1K OHM,1%,0.125W	91637	CMF55116G30101F
A8A1R232	321-0325-00	B010159		RES.,FXD,FILM:23.7K OHM,1%,0.125W	91637	MFF1816G23701F
A8A1R235	311-2110-00			RES.,VAR,NONWIR:PNL,10K OHM,10%,0.5W	12697	CM41778
A8A1R236	321-0385-00	B010100	B010158	RES.,FXD,FILM:100K OHM,1%,0.125W	91637	MFF1816G10002F
A8A1R236	321-0376-00	B010159		RES.,FXD,FILM:80.6K OHM,1%,0.125W	91637	MFF1816G80601F
A8A1R240	311-2110-00			RES.,VAR,NONWIR:PNL,10K OHM,10%,0.5W	12697	CM41778
A8A1R242	321-0335-00	B010100	B010158	RES.,FXD,FILM:30.1K OHM,1%,0.125W	91637	CMF55116G30101F
A8A1R242	321-0325-00	B010159	B020749	RES.,FXD,FILM:23.7K OHM,1%,0.125W	91637	MFF1816G23701F
A8A1R242	321-0307-00	B020750		RES.,FXD,FILM:15.4K OHM,1%,0.125W	91637	MFF1816G15401F
A8A1R245	311-2110-00			RES.,VAR,NONWIR:PNL,10K OHM,10%,0.5W	12697	CM41778
A8A1R246	321-0356-00	B010100	B010158	RES.,FXD,FILM:49.9K OHM,1%,0.125W	91637	MFF1816G49901F
A8A1R246	321-0346-00	B010159		RES.,FXD,FILM:39.2K OHM,1%,0.125W	91637	CMF55116G32201F
A8A1R248	321-0328-00			RES.,FXD,FILM:25.5K OHM,1%,0.125W	91637	MFF1816G25501F
A8A1R250	311-2110-00			RES.,VAR,NONWIR:PNL,10K OHM,10%,0.5W	12697	CM41778
A8A1R252	321-0335-00			RES.,FXD,FILM:30.1K OHM,1%,0.125W	91637	CMF55116G30101F
A8A1R254	321-0285-00	B010100	B010158	RES.,FXD,FILM:9.09K OHM,1%,0.125W	91637	MFF1816G90900F
A8A1R254	321-0261-00	B010159		RES.,FXD,FILM:5.11K OHM,1%,0.125W	91637	MFF1816G51100F
A8A1R255	311-2110-00			RES.,VAR,NONWIR:PNL,10K OHM,10%,0.5W	12697	CM41778
A8A1R256	321-0385-00	B010100	B010158	RES.,FXD,FILM:100K OHM,1%,0.125W	91637	MFF1816G10002F
A8A1R256	321-0376-00	B010159		RES.,FXD,FILM:80.6K OHM,1%,0.125W	91637	MFF1816G80601F
A8A1R260	311-2110-00			RES.,VAR,NONWIR:PNL,10K OHM,10%,0.5W	12697	CM41778
A8A1R262	321-0335-00	B010100	B010158	RES.,FXD,FILM:30.1K OHM,1%,0.125W	91637	CMF55116G30101F
A8A1R262	321-0325-00	B010159	B020749	RES.,FXD,FILM:23.7K OHM,1%,0.125W	91637	MFF1816G23701F
A8A1R262	321-0307-00	B020750		RES.,FXD,FILM:15.4K OHM,1%,0.125W	91637	MFF1816G15401F
A8A1R265	311-2110-00			RES.,VAR,NONWIR:PNL,10K OHM,10%,0.5W	12697	CM41778
A8A1R266	321-0356-00	B010100	B010158	RES.,FXD,FILM:49.9K OHM,1%,0.125W	91637	MFF1816G49901F
A8A1R266	321-0346-00	B010159		RES.,FXD,FILM:39.2K OHM,1%,0.125W	91637	CMF55116G32201F
A8A1R302	321-0289-00			RES.,FXD,FILM:10K OHM,1%,0.125W	91637	MFF1816G10001F
A8A1R303	321-0289-00			RES.,FXD,FILM:10K OHM,1%,0.125W	91637	MFF1816G10001F
A8A1R304	315-0472-00			RES.,FXD,CMPSN:4.7K OHM,5%,0.25W	01121	CB4725
A8A1R308	321-0225-00			RES.,FXD,FILM:2.15K OHM,1%,0.125W	91637	MFF1816G21500F
A8A1R320	311-2110-00			RES.,VAR,NONWIR:PNL,10K OHM,10%,0.5W	12697	CM41778
A8A1R322	321-0414-00			RES.,FXD,FILM:200K OHM,1%,0.125W	91637	MFF1816G20002F
A8A1R324	321-0414-00			RES.,FXD,FILM:200K OHM,1%,0.125W	91637	MFF1816G20002F
A8A1R325	311-2110-00			RES.,VAR,NONWIR:PNL,10K OHM,10%,0.5W	12697	CM41778
A8A1R326	321-0414-00			RES.,FXD,FILM:200K OHM,1%,0.125W	91637	MFF1816G20002F

Component No.	Tektronix Part No.	Serial/Model No. Eff	Dscont	Name & Description	Mfr Code	Mfr Part Number
A8A1R328	321-0414-00			RES.,FXD,FILM:200K OHM,1%,0.125W	91637	MFF1816G20002F
A8A1R330	311-2110-00			RES.,VAR,NONWIR:PNL,10K OHM,10%,0.5W	12697	CM41778
A8A1R332	321-0402-00	B010100	B010158	RES.,FXD,FILM:150K OHM,1%,0.125W	24546	NA55D1503F
A8A1R332	321-0393-00	B010159		RES.,FXD,FILM:121K OHM,1%,0.125W	91637	CMF55116G12102F
A8A1R334	321-0402-00	B010100	B010158	RES.,FXD,FILM:150K OHM,1%,0.125W	24546	NA55D1503F
A8A1R334	321-0393-00	B010159		RES.,FXD,FILM:121K OHM,1%,0.125W	91637	CMF55116G12102F
A8A1R335	311-2110-00			RES.,VAR,NONWIR:PNL,10K OHM,10%,0.5W	12697	CM41778
A8A1R336	321-0402-00	B010100	B010158	RES.,FXD,FILM:150K OHM,1%,0.125W	24546	NA55D1503F
A8A1R336	321-0393-00	B010159		RES.,FXD,FILM:121K OHM,1%,0.125W	91637	CMF55116G12102F
A8A1R338	321-0402-00	B010100	B010158	RES.,FXD,FILM:150K OHM,1%,0.125W	24546	NA55D1503F
A8A1R338	321-0393-00	B010159		RES.,FXD,FILM:121K OHM,1%,0.125W	91637	CMF55116G12102F
A8A1R340	311-2110-00			RES.,VAR,NONWIR:PNL,10K OHM,10%,0.5W	12697	CM41778
A8A1R342	321-0324-00			RES.,FXD,FILM:23.2K OHM,1%,0.125W	91637	MFF1816G23201F
A8A1R344	321-0324-00			RES.,FXD,FILM:23.2K OHM,1%,0.125W	91637	MFF1816G23201F
A8A1R345	311-2110-00			RES.,VAR,NONWIR:PNL,10K OHM,10%,0.5W	12697	CM41778
A8A1R346	321-0373-00			RES.,FXD,FILM:75K OHM, 1%,0.125W	91637	MFF1816G75001F
A8A1R348	321-0373-00			RES.,FXD,FILM:75K OHM, 1%,0.125W	91637	MFF1816G75001F
A8A1R350	311-2110-00			RES.,VAR,NONWIR:PNL,10K OHM,10%,0.5W	12697	CM41778
A8A1R352	321-0373-00			RES.,FXD,FILM:75K OHM, 1%,0.125W	91637	MFF1816G75001F
A8A1R354	321-0373-00			RES.,FXD,FILM:75K OHM, 1%,0.125W	91637	MFF1816G75001F
A8A1R355	311-2110-00			RES.,VAR,NONWIR:PNL,10K OHM,10%,0.5W	12697	CM41778
A8A1R356	321-0402-00			RES.,FXD,FILM:150K OHM,1%,0.125W	24546	NA55D1503F
A8A1R358	321-0402-00			RES.,FXD,FILM:150K OHM,1%,0.125W	24546	NA55D1503F
A8A1R360	311-2110-00			RES.,VAR,NONWIR:PNL,10K OHM,10%,0.5W	12697	CM41778
A8A1R362	321-0324-00			RES.,FXD,FILM:23.2K OHM,1%,0.125W	91637	MFF1816G23201F
A8A1R364	321-0324-00			RES.,FXD,FILM:23.2K OHM,1%,0.125W	91637	MFF1816G23201F
A8A1R365	311-2110-00			RES.,VAR,NONWIR:PNL,10K OHM,10%,0.5W	12697	CM41778
A8A1R366	321-0373-00			RES.,FXD,FILM:75K OHM, 1%,0.125W	91637	MFF1816G75001F
A8A1R368	321-0373-00			RES.,FXD,FILM:75K OHM, 1%,0.125W	91637	MFF1816G75001F
A8A1R402	321-0289-00			RES.,FXD,FILM:10K OHM,1%,0.125W	91637	MFF1816G10001F
A8A1R403	321-0289-00			RES.,FXD,FILM:10K OHM,1%,0.125W	91637	MFF1816G10001F
A8A1R404	315-0472-00			RES.,FXD,CMPSN:4.7K OHM,5%,0.25W	01121	CB4725
A8A1R420	311-2110-00			RES.,VAR,NONWIR:PNL,10K OHM,10%,0.5W	12697	CM41778
A8A1R422	321-0335-00			RES.,FXD,FILM:30.1K OHM,1%,0.125W	91637	CMF55116G30101F
A8A1R425	311-2110-00			RES.,VAR,NONWIR:PNL,10K OHM,10%,0.5W	12697	CM41778
A8A1R426	321-0414-00			RES.,FXD,FILM:200K OHM,1%,0.125W	91637	MFF1816G20002F
A8A1R430	311-2110-00			RES.,VAR,NONWIR:PNL,10K OHM,10%,0.5W	12697	CM41778
A8A1R432	321-0335-00	B010100	B010158	RES.,FXD,FILM:30.1K OHM,1%,0.125W	91637	CMF55116G30101F
A8A1R432	321-0325-00	B010159		RES.,FXD,FILM:23.7K OHM,1%,0.125W	91637	MFF1816G23701F
A8A1R435	311-2110-00			RES.,VAR,NONWIR:PNL,10K OHM,10%,0.5W	12697	CM41778
A8A1R436	321-0385-00	B010100	B010158	RES.,FXD,FILM:100K OHM,1%,0.125W	91637	MFF1816G10002F
A8A1R436	321-0376-00	B010159		RES.,FXD,FILM:80.6K OHM,1%,0.125W	91637	MFF1816G80601F
A8A1R440	311-2110-00			RES.,VAR,NONWIR:PNL,10K OHM,10%,0.5W	12697	CM41778
A8A1R442	321-0335-00			RES.,FXD,FILM:30.1K OHM,1%,0.125W	91637	CMF55116G30101F
A8A1R444	321-0328-00			RES.,FXD,FILM:25.5K OHM,1%,0.125W	91637	MFF1816G25501F
A8A1R445	311-2110-00			RES.,VAR,NONWIR:PNL,10K OHM,10%,0.5W	12697	CM41778
A8A1R446	321-0335-00			RES.,FXD,FILM:30.1K OHM,1%,0.125W	91637	CMF55116G30101F
A8A1R448	321-0313-00			RES.,FXD,FILM:17.8K OHM,1%,0.125W	91637	MFF1816G17801F
A8A1R450	311-2110-00			RES.,VAR,NONWIR:PNL,10K OHM,10%,0.5W	12697	CM41778
A8A1R452	321-0367-00			RES.,FXD,FILM:64.9K OHM,1%,0.125W	91637	MFF1816G64901F
A8A1R454	321-0318-00			RES.,FXD,FILM:20K OHM,1%,0.125W	91637	MFF1816G20001F
A8A1R455	311-2110-00			RES.,VAR,NONWIR:PNL,10K OHM,10%,0.5W	12697	CM41778
A8A1R456	321-0289-00			RES.,FXD,FILM:10K OHM,1%,0.125W	91637	MFF1816G10001F
A8A1R458	321-0373-00			RES.,FXD,FILM:75K OHM, 1%,0.125W	91637	MFF1816G75001F

Component No.	Tektronix Part No.	Serial/Model No. Eff	Dscont	Name & Description	Mfr Code	Mfr Part Number
A8A1R460	311-2110-00			RES.,VAR,NONWIR:PNL,10K OHM,10%,0.5W	12697	CM41778
A8A1R462	321-0335-00			RES.,FXD,FILM:30.1K OHM,1%,0.125W	91637	CMF55116G30101F
A8A1R464	321-0328-00			RES.,FXD,FILM:25.5K OHM,1%,0.125W	91637	MFF1816G25501F
A8A1R465	311-2110-00			RES.,VAR,NONWIR:PNL,10K OHM,10%,0.5W	12697	CM41778
A8A1R466	321-0313-00			RES.,FXD,FILM:17.8K OHM,1%,0.125W	91637	MFF1816G17801F
A8A1R468	321-0335-00			RES.,FXD,FILM:30.1K OHM,1%,0.125W	91637	CMF55116G30101F
A8A1R472	308-0836-00			RES.,FXD,WW:1.2 OHM,5%,1W,FUSIBLE	75042	BW-20F-1.2 OHM
A8A1R474	308-0836-00			RES.,FXD,WW:1.2 OHM,5%,1W,FUSIBLE	75042	BW-20F-1.2 OHM
A8A1R505	321-0289-00			RES.,FXD,FILM:10K OHM,1%,0.125W	91637	MFF1816G10001F
A8A1R506	321-0289-00			RES.,FXD,FILM:10K OHM,1%,0.125W	91637	MFF1816G10001F
A8A1R507	315-0472-00			RES.,FXD,CMPSN:4.7K OHM,5%,0.25W	01121	CB4725
A8A1R535	321-0279-00			RES.,FXD,FILM:7.87K OHM,1%,0.125W	91637	MFF1816G78700F
A8A1R540	311-2110-00			RES.,VAR,NONWIR:PNL,10K OHM,10%,0.5W	12697	CM41778
A8A1R542	321-0356-00	B010100	B010158	RES.,FXD,FILM:49.9K OHM,1%,0.125W	91637	MFF1816G49901F
A8A1R542	321-0346-00	B010159		RES.,FXD,FILM:39.2K OHM,1%,0.125W	91637	CMF55116G32201F
A8A1R544	321-0356-00	B010100	B010158	RES.,FXD,FILM:49.9K OHM,1%,0.125W	91637	MFF1816G49901F
A8A1R544	321-0346-00	B010159		RES.,FXD,FILM:39.2K OHM,1%,0.125W	91637	CMF55116G32201F
A8A1R545	311-2110-00			RES.,VAR,NONWIR:PNL,10K OHM,10%,0.5W	12697	CM41778
A8A1R546	321-0356-00	B010100	B010158	RES.,FXD,FILM:49.9K OHM,1%,0.125W	91637	MFF1816G49901F
A8A1R546	321-0346-00	B010159		RES.,FXD,FILM:39.2K OHM,1%,0.125W	91637	CMF55116G32201F
A8A1R548	321-0356-00	B010100	B010158	RES.,FXD,FILM:49.9K OHM,1%,0.125W	91637	MFF1816G49901F
A8A1R548	321-0346-00	B010159		RES.,FXD,FILM:39.2K OHM,1%,0.125W	91637	CMF55116G32201F
A8A1R550	311-2110-00			RES.,VAR,NONWIR:PNL,10K OHM,10%,0.5W	12697	CM41778
A8A1R552	321-0324-00			RES.,FXD,FILM:23.2K OHM,1%,0.125W	91637	MFF1816G23201F
A8A1R554	321-0324-00			RES.,FXD,FILM:23.2K OHM,1%,0.125W	91637	MFF1816G23201F
A8A1R555	311-2110-00			RES.,VAR,NONWIR:PNL,10K OHM,10%,0.5W	12697	CM41778
A8A1R556	321-0385-00			RES.,FXD,FILM:100K OHM,1%,0.125W	91637	MFF1816G10002F
A8A1R558	321-0385-00			RES.,FXD,FILM:100K OHM,1%,0.125W	91637	MFF1816G10002F
A8A1R560	311-2110-00			RES.,VAR,NONWIR:PNL,10K OHM,10%,0.5W	12697	CM41778
A8A1R562	321-0356-00	B010100	B010158	RES.,FXD,FILM:49.9K OHM,1%,0.125W	91637	MFF1816G49901F
A8A1R562	321-0346-00	B010159		RES.,FXD,FILM:39.2K OHM,1%,0.125W	91637	CMF55116G32201F
A8A1R564	321-0356-00	B010100	B010158	RES.,FXD,FILM:49.9K OHM,1%,0.125W	91637	MFF1816G49901F
A8A1R564	321-0346-00	B010159		RES.,FXD,FILM:39.2K OHM,1%,0.125W	91637	CMF55116G32201F
A8A1R565	311-2110-00			RES.,VAR,NONWIR:PNL,10K OHM,10%,0.5W	12697	CM41778
A8A1R566	321-0356-00	B010100	B010158	RES.,FXD,FILM:49.9K OHM,1%,0.125W	91637	MFF1816G49901F
A8A1R566	321-0346-00	B010159		RES.,FXD,FILM:39.2K OHM,1%,0.125W	91637	CMF55116G32201F
A8A1R568	321-0356-00	B010100	B010158	RES.,FXD,FILM:49.9K OHM,1%,0.125W	91637	MFF1816G49901F
A8A1R568	321-0346-00	B010159		RES.,FXD,FILM:39.2K OHM,1%,0.125W	91637	CMF55116G32201F
A8A1R627	321-0296-00			RES.,FXD,FILM:11.8K OHM,1%,0.125W	91637	MFF1816G11801F
A8A1R628	321-0296-00			RES.,FXD,FILM:11.8K OHM,1%,0.125W	91637	MFF1816G11801F
A8A1R630	311-2110-00			RES.,VAR,NONWIR:PNL,10K OHM,10%,0.5W	12697	CM41778
A8A1R633	311-1757-00			RES.,VAR,NONWIR:2.5K OHM,10%,0.50W	32997	3326H-G48-252
A8A1R635	311-2110-00			RES.,VAR,NONWIR:PNL,10K OHM,10%,0.5W	12697	CM41778
A8A1R636	321-0308-00			RES.,FXD,FILM:15.8K OHM,1%,0.125W	91637	MFF1816G15801F
A8A1R637	315-0432-00			RES.,FXD,CMPSN:4.3K OHM,5%,0.25W	01121	CB4325
A8A1R640	311-2110-00			RES.,VAR,NONWIR:PNL,10K OHM,10%,0.5W	12697	CM41778
A8A1R642	321-0335-00	B010100	B010158	RES.,FXD,FILM:30.1K OHM,1%,0.125W	91637	CMF55116G30101F
A8A1R642	321-0325-00	B010159		RES.,FXD,FILM:23.7K OHM,1%,0.125W	91637	MFF1816G23701F
A8A1R645	311-2110-00			RES.,VAR,NONWIR:PNL,10K OHM,10%,0.5W	12697	CM41778
A8A1R646	321-0356-00	B010100	B010158	RES.,FXD,FILM:49.9K OHM,1%,0.125W	91637	MFF1816G49901F
A8A1R646	321-0346-00	B010159		RES.,FXD,FILM:39.2K OHM,1%,0.125W	91637	CMF55116G32201F
A8A1R648	321-0328-00			RES.,FXD,FILM:25.5K OHM,1%,0.125W	91637	MFF1816G25501F
A8A1R650	311-2110-00			RES.,VAR,NONWIR:PNL,10K OHM,10%,0.5W	12697	CM41778
A8A1R652	321-0335-00			RES.,FXD,FILM:30.1K OHM,1%,0.125W	91637	CMF55116G30101F

Component No.	Tektronix Part No.	Serial/Model No. Eff	Dscont	Name & Description	Mfr Code	Mfr Part Number
A8A1R654	321-0285-00	B010100	B010158	RES.,FXD,FILM:9.09K OHM,1%,0.125W	91637	MFF1816G90900F
A8A1R654	321-0261-00	B010159		RES.,FXD,FILM:5.11K OHM,1%,0.125W	91637	MFF1816G51100F
A8A1R655	311-2110-00			RES.,VAR,NONWIR:PNL,10K OHM,10%,0.5W	12697	CM41778
A8A1R656	321-0385-00	B010100	B010158	RES.,FXD,FILM:100K OHM,1%,0.125W	91637	MFF1816G10002F
A8A1R656	321-0376-00	B010159		RES.,FXD,FILM:80.6K OHM,1%,0.125W	91637	MFF1816G80601F
A8A1R660	311-2110-00			RES.,VAR,NONWIR:PNL,10K OHM,10%,0.5W	12697	CM41778
A8A1R662	321-0335-00	B010100	B010158	RES.,FXD,FILM:30.1K OHM,1%,0.125W	91637	CMF55116G30101F
A8A1R662	321-0325-00	B010159		RES.,FXD,FILM:23.7K OHM,1%,0.125W	91637	MFF1816G23701F
A8A1R665	311-2110-00			RES.,VAR,NONWIR:PNL,10K OHM,10%,0.5W	12697	CM41778
A8A1R666	321-0356-00	B010100	B010158	RES.,FXD,FILM:49.9K OHM,1%,0.125W	91637	MFF1816G49901F
A8A1R666	321-0346-00	B010159		RES.,FXD,FILM:39.2K OHM,1%,0.125W	91637	CMF55116G32201F
A8A1R700	321-0193-00			RES.,FXD,FILM:1K OHM,1%,0.125W	01121	ORD BY DESCR
A8A1R701	311-2109-00			RES.,VAR,NONWIR:PNL,25K OHM,10%,0.5W	12697	CM41777
A8A1R704	321-0193-00			RES.,FXD,FILM:1K OHM,1%,0.125W	01121	ORD BY DESCR
A8A1R705	311-2109-00			RES.,VAR,NONWIR:PNL,25K OHM,10%,0.5W	12697	CM41777
A8A1R710	321-0193-00			RES.,FXD,FILM:1K OHM,1%,0.125W	01121	ORD BY DESCR
A8A1R711	311-2109-00			RES.,VAR,NONWIR:PNL,25K OHM,10%,0.5W	12697	CM41777
A8A1R718	315-0102-00			RES.,FXD,CMPSN:1K OHM,5%,0.25W	01121	CB1025
A8A1R800	321-0193-00			RES.,FXD,FILM:1K OHM,1%,0.125W	01121	ORD BY DESCR
A8A1R801	311-2109-00			RES.,VAR,NONWIR:PNL,25K OHM,10%,0.5W	12697	CM41777
A8A1R804	321-0193-00			RES.,FXD,FILM:1K OHM,1%,0.125W	01121	ORD BY DESCR
A8A1R805	311-2109-00			RES.,VAR,NONWIR:PNL,25K OHM,10%,0.5W	12697	CM41777
A8A1R810	321-0193-00			RES.,FXD,FILM:1K OHM,1%,0.125W	01121	ORD BY DESCR
A8A1R811	311-2109-00			RES.,VAR,NONWIR:PNL,25K OHM,10%,0.5W	12697	CM41777
A8A1R818	321-0327-00			RES.,FXD,FILM:24.9K OHM,1%,0.125W	91637	MFF1816G24901F
A8A1R820	311-2110-00			RES.,VAR,NONWIR:PNL,10K OHM,10%,0.5W	12697	CM41778
A8A1R823	321-0239-00			RES.,FXD,FILM:3.01K OHM,1%,0.125W	91637	MFF1816G30100F
A8A1R824	321-0284-00			RES.,FXD,FILM:8.87K OHM,1%,0.125W	91637	MFF1816G88700F
A8A1R825	311-2110-00			RES.,VAR,NONWIR:PNL,10K OHM,10%,0.5W	12697	CM41778
A8A1R827	311-0660-00			RES.,VAR,NONWIR:TRMR,200K OHM,0.5W	73138	82-35-1
A8A1R904	321-0289-00			RES.,FXD,FILM:10K OHM,1%,0.125W	91637	MFF1816G10001F
A8A1R905	311-2109-00			RES.,VAR,NONWIR:PNL,25K OHM,10%,0.5W	12697	CM41777
A8A1R910	321-0289-00			RES.,FXD,FILM:10K OHM,1%,0.125W	91637	MFF1816G10001F
A8A1R911	311-2109-00			RES.,VAR,NONWIR:PNL,25K OHM,10%,0.5W	12697	CM41777
A8A1R915	321-0193-00			RES.,FXD,FILM:1K OHM,1%,0.125W	01121	ORD BY DESCR
A8A1R920	311-2110-00			RES.,VAR,NONWIR:PNL,10K OHM,10%,0.5W	12697	CM41778
A8A1R922	321-0302-00			RES.,FXD,FILM:13.7K OHM,1%,0.125W	91637	MFF1816G13701F
A8A1R925	311-2110-00			RES.,VAR,NONWIR:PNL,10K OHM,10%,0.5W	12697	CM41778
A8A1R926	321-0256-00			RES.,FXD,FILM:4.53K OHM,1%,0.125W	91637	MFF1816G45300F
A8A1R928	311-0633-00			RES.,VAR,NONWIR:5K OHM,10%,0.50W	73138	82-30-1
A8A1S602	260-1811-01			SWITCH,SLIDE:DPDT,0.5A,125VAC	82389	OBD
A8A1S606	260-1811-01			SWITCH,SLIDE:DPDT,0.5A,125VAC	82389	OBD
A8A1S612	260-1811-01			SWITCH,SLIDE:DPDT,0.5A,125VAC	82389	OBD
A8A1S620	260-1608-00			SWITCH,SLIDE:DPDT,0.3A,125VAC	95146	MSS4200
A8A1S626	260-1608-00			SWITCH,SLIDE:DPDT,0.3A,125VAC	95146	MSS4200
A8A1S720	260-1811-01			SWITCH,SLIDE:DPDT,0.5A,125VAC	82389	OBD
A8A1S726	260-1811-01			SWITCH,SLIDE:DPDT,0.5A,125VAC	82389	OBD
A8A1U108	156-0742-02			MICROCIRCUIT,LI:OPERATIONAL AMPLIFIER,SEL	01295	LM318JG
A8A1U109	156-0742-02			MICROCIRCUIT,LI:OPERATIONAL AMPLIFIER,SEL	01295	LM318JG
A8A1U205	156-0742-02			MICROCIRCUIT,LI:OPERATIONAL AMPLIFIER,SEL	01295	LM318JG
A8A1U305	156-0742-02			MICROCIRCUIT,LI:OPERATIONAL AMPLIFIER,SEL	01295	LM318JG
A8A1U400	156-0285-01			MICROCIRCUIT,LI:VOLTAGE REGULATOR,CHK	04713	MC7812CTD
A8A1U405	156-0742-02			MICROCIRCUIT,LI:OPERATIONAL AMPLIFIER,SEL	01295	LM318JG
A8A1U410	156-0872-01			MICROCIRCUIT,LI:VOLTAGE REGULATOR	04713	MC7912CTD
A8A1U508	156-0742-02			MICROCIRCUIT,LI:OPERATIONAL AMPLIFIER,SEL	01295	LM318JG
A8A1U539	156-1149-01			MICROCIRCUIT,LI:OPER AMPL,JFET,BURN-IN	27014	GLEA134/A+

Component No.	Tektronix Part No.	Serial/Model No. Eff	Dscont	Name & Description	Mfr Code	Mfr Part Number
A8A2	670-6363-00	B010100	B010158	CKT BOARD ASSY:CONVERGENCE GENERATOR	80009	670-6363-00
A8A2	670-6363-01	B010159	B020794	CKT BOARD ASSY:CONVERGENCE GENERATOR	80009	670-6363-01
A8A2	670-6363-02	B020795		CKT BOARD ASSY:CONVERGENCE GENERATOR	80009	670-6363-02
A8A2C107	281-0775-00			CAP.,FXD,CER DI:0.1UF,20%,50V	04222	MA205E104MAA
A8A2C111	281-0775-00			CAP.,FXD,CER DI:0.1UF,20%,50V	04222	MA205E104MAA
A8A2C117	281-0775-00			CAP.,FXD,CER DI:0.1UF,20%,50V	04222	MA205E104MAA
A8A2C136	281-0775-00			CAP.,FXD,CER DI:0.1UF,20%,50V	04222	MA205E104MAA
A8A2C140	281-0775-00			CAP.,FXD,CER DI:0.1UF,20%,50V	04222	MA205E104MAA
A8A2C141	281-0775-00			CAP.,FXD,CER DI:0.1UF,20%,50V	04222	MA205E104MAA
A8A2C145	281-0775-00			CAP.,FXD,CER DI:0.1UF,20%,50V	04222	MA205E104MAA
A8A2C161	281-0775-00			CAP.,FXD,CER DI:0.1UF,20%,50V	04222	MA205E104MAA
A8A2C170	281-0775-00			CAP.,FXD,CER DI:0.1UF,20%,50V	04222	MA205E104MAA
A8A2C171	281-0775-00			CAP.,FXD,CER DI:0.1UF,20%,50V	04222	MA205E104MAA
A8A2C180	281-0775-00			CAP.,FXD,CER DI:0.1UF,20%,50V	04222	MA205E104MAA
A8A2C181	281-0775-00			CAP.,FXD,CER DI:0.1UF,20%,50V	04222	MA205E104MAA
A8A2C182	281-0775-00			CAP.,FXD,CER DI:0.1UF,20%,50V	04222	MA205E104MAA
A8A2C183	281-0775-00			CAP.,FXD,CER DI:0.1UF,20%,50V	04222	MA205E104MAA
A8A2C190	283-0648-00			CAP.,FXD,MICA D:10PF,5%,100V	00853	D151C100D0
A8A2C191	281-0775-00			CAP.,FXD,CER DI:0.1UF,20%,50V	04222	MA205E104MAA
A8A2C192	281-0775-00			CAP.,FXD,CER DI:0.1UF,20%,50V	04222	MA205E104MAA
A8A2C193	283-0648-00			CAP.,FXD,MICA D:10PF,5%,100V	00853	D151C100D0
A8A2C194	281-0775-00			CAP.,FXD,CER DI:0.1UF,20%,50V	04222	MA205E104MAA
A8A2C195	281-0775-00			CAP.,FXD,CER DI:0.1UF,20%,50V	04222	MA205E104MAA
A8A2C201	281-0775-00			CAP.,FXD,CER DI:0.1UF,20%,50V	04222	MA205E104MAA
A8A2C202	281-0775-00			CAP.,FXD,CER DI:0.1UF,20%,50V	04222	MA205E104MAA
A8A2C217	281-0775-00			CAP.,FXD,CER DI:0.1UF,20%,50V	04222	MA205E104MAA
A8A2C229	283-0648-00			CAP.,FXD,MICA D:10PF,5%,100V	00853	D151C100D0
A8A2C243	281-0775-00			CAP.,FXD,CER DI:0.1UF,20%,50V	04222	MA205E104MAA
A8A2C244	281-0775-00			CAP.,FXD,CER DI:0.1UF,20%,50V	04222	MA205E104MAA
A8A2C264	281-0775-00			CAP.,FXD,CER DI:0.1UF,20%,50V	04222	MA205E104MAA
A8A2C271	281-0775-00			CAP.,FXD,CER DI:0.1UF,20%,50V	04222	MA205E104MAA
A8A2C274	281-0775-00			CAP.,FXD,CER DI:0.1UF,20%,50V	04222	MA205E104MAA
A8A2C275	281-0775-00			CAP.,FXD,CER DI:0.1UF,20%,50V	04222	MA205E104MAA
A8A2C280	281-0775-00			CAP.,FXD,CER DI:0.1UF,20%,50V	04222	MA205E104MAA
A8A2C281	281-0775-00			CAP.,FXD,CER DI:0.1UF,20%,50V	04222	MA205E104MAA
A8A2C282	283-0648-00			CAP.,FXD,MICA D:10PF,5%,100V	00853	D151C100D0
A8A2C283	281-0775-00			CAP.,FXD,CER DI:0.1UF,20%,50V	04222	MA205E104MAA
A8A2C290	281-0775-00			CAP.,FXD,CER DI:0.1UF,20%,50V	04222	MA205E104MAA
A8A2C291	281-0775-00			CAP.,FXD,CER DI:0.1UF,20%,50V	04222	MA205E104MAA
A8A2C292	281-0775-00			CAP.,FXD,CER DI:0.1UF,20%,50V	04222	MA205E104MAA
A8A2C293	283-0648-00			CAP.,FXD,MICA D:10PF,5%,100V	00853	D151C100D0
A8A2C300	281-0775-00			CAP.,FXD,CER DI:0.1UF,20%,50V	04222	MA205E104MAA
A8A2C320	281-0775-00			CAP.,FXD,CER DI:0.1UF,20%,50V	04222	MA205E104MAA
A8A2C321	283-0648-00			CAP.,FXD,MICA D:10PF,5%,100V	00853	D151C100D0
A8A2C329	281-0775-00			CAP.,FXD,CER DI:0.1UF,20%,50V	04222	MA205E104MAA
A8A2C345	283-0648-00			CAP.,FXD,MICA D:10PF,5%,100V	00853	D151C100D0
A8A2C350	283-0119-00	B020795		CAP.,FXD,CER DI: 2200PF,5%,200V	60705	564CAA402EJ250KA
A8A2C351	281-0577-00	B020795		CAP.,FXD,CER DI:14PF,5%,500V	04222	7001-COG-140J
A8A2C353	281-0775-00			CAP.,FXD,CER DI:0.1UF,20%,50V	04222	MA205E104MAA
A8A2C361	281-0775-00			CAP.,FXD,CER DI:0.1UF,20%,50V	04222	MA205E104MAA
A8A2C370	281-0775-00			CAP.,FXD,CER DI:0.1UF,20%,50V	04222	MA205E104MAA
A8A2C382	281-0775-00			CAP.,FXD,CER DI:0.1UF,20%,50V	04222	MA205E104MAA
A8A2C400	281-0775-00			CAP.,FXD,CER DI:0.1UF,20%,50V	04222	MA205E104MAA
A8A2C403	281-0775-00			CAP.,FXD,CER DI:0.1UF,20%,50V	04222	MA205E104MAA

Component No.	Tektronix Part No.	Serial/Model No. Eff	Dscont	Name & Description	Mfr Code	Mfr Part Number
A8A2C410	281-0775-00			CAP.,FXD,CER DI:0.1UF,20%,50V	04222	MA205E104MAA
A8A2C420	281-0775-00			CAP.,FXD,CER DI:0.1UF,20%,50V	04222	MA205E104MAA
A8A2C421	281-0775-00			CAP.,FXD,CER DI:0.1UF,20%,50V	04222	MA205E104MAA
A8A2C425	281-0775-00			CAP.,FXD,CER DI:0.1UF,20%,50V	04222	MA205E104MAA
A8A2C434	281-0599-00			CAP.,FXD,CER DI:1PF,+/-0.25PF,500V	59660	374-018-C0K0109C
A8A2C440	281-0775-00			CAP.,FXD,CER DI:0.1UF,20%,50V	04222	MA205E104MAA
A8A2C441	281-0775-00			CAP.,FXD,CER DI:0.1UF,20%,50V	04222	MA205E104MAA
A8A2C442	283-0648-00			CAP.,FXD,MICA D:10PF,5%,100V	00853	D151C100D0
A8A2C455	281-0775-00			CAP.,FXD,CER DI:0.1UF,20%,50V	04222	MA205E104MAA
A8A2C456	281-0775-00			CAP.,FXD,CER DI:0.1UF,20%,50V	04222	MA205E104MAA
A8A2C462	283-0648-00			CAP.,FXD,MICA D:10PF,5%,100V	00853	D151C100D0
A8A2C463	283-0672-00			CAP.,FXD,MICA D:200PF,1%,500V	00853	D155F2010F0
A8A2C473	281-0775-00			CAP.,FXD,CER DI:0.1UF,20%,50V	04222	MA205E104MAA
A8A2C493	281-0775-00			CAP.,FXD,CER DI:0.1UF,20%,50V	04222	MA205E104MAA
A8A2C495	281-0775-00			CAP.,FXD,CER DI:0.1UF,20%,50V	04222	MA205E104MAA
A8A2C496	281-0775-00			CAP.,FXD,CER DI:0.1UF,20%,50V	04222	MA205E104MAA
A8A2C521	281-0775-00			CAP.,FXD,CER DI:0.1UF,20%,50V	04222	MA205E104MAA
A8A2C535	281-0775-00			CAP.,FXD,CER DI:0.1UF,20%,50V	04222	MA205E104MAA
A8A2C540	281-0775-00			CAP.,FXD,CER DI:0.1UF,20%,50V	04222	MA205E104MAA
A8A2C541	281-0775-00			CAP.,FXD,CER DI:0.1UF,20%,50V	04222	MA205E104MAA
A8A2C542	281-0775-00			CAP.,FXD,CER DI:0.1UF,20%,50V	04222	MA205E104MAA
A8A2C555	281-0775-00			CAP.,FXD,CER DI:0.1UF,20%,50V	04222	MA205E104MAA
A8A2C556	281-0775-00			CAP.,FXD,CER DI:0.1UF,20%,50V	04222	MA205E104MAA
A8A2C560	283-0648-00			CAP.,FXD,MICA D:10PF,5%,100V	00853	D151C100D0
A8A2C571	281-0775-00			CAP.,FXD,CER DI:0.1UF,20%,50V	04222	MA205E104MAA
A8A2C581	283-0177-00			CAP.,FXD,CER DI:1UF,+80-20%,25V	04222	SR302E105ZAA
A8A2C582	283-0177-00			CAP.,FXD,CER DI:1UF,+80-20%,25V	04222	SR302E105ZAA
A8A2C590	290-0846-00			CAP.,FXD,ELCTLT:47UF,-10+75%,35 WVDC	54473	ECE-A35V47LU
A8A2C591	290-0846-00			CAP.,FXD,ELCTLT:47UF,-10+75%,35 WVDC	54473	ECE-A35V47LU
A8A2C613	283-0648-00			CAP.,FXD,MICA D:10PF,5%,100V	00853	D151C100D0
A8A2C614	281-0775-00			CAP.,FXD,CER DI:0.1UF,20%,50V	04222	MA205E104MAA
A8A2C615	281-0775-00			CAP.,FXD,CER DI:0.1UF,20%,50V	04222	MA205E104MAA
A8A2C622	281-0599-00			CAP.,FXD,CER DI:1PF,+/-0.25PF,500V	59660	374-018-C0K0109C
A8A2C623	281-0775-00			CAP.,FXD,CER DI:0.1UF,20%,50V	04222	MA205E104MAA
A8A2C640	281-0775-00			CAP.,FXD,CER DI:0.1UF,20%,50V	04222	MA205E104MAA
A8A2C641	281-0775-00			CAP.,FXD,CER DI:0.1UF,20%,50V	04222	MA205E104MAA
A8A2C701	281-0775-00			CAP.,FXD,CER DI:0.1UF,20%,50V	04222	MA205E104MAA
A8A2C702	283-0649-00			CAP.,FXD,MICA D:105PF,1%,300V	00853	D155F1050F0
A8A2C713	283-0067-00			CAP.,FXD,CER DI:0.001UF,10%,200V	59660	835-515-Z5D0102K
A8A2C722	281-0775-00			CAP.,FXD,CER DI:0.1UF,20%,50V	04222	MA205E104MAA
A8A2C723	281-0775-00			CAP.,FXD,CER DI:0.1UF,20%,50V	04222	MA205E104MAA
A8A2C725	281-0775-00			CAP.,FXD,CER DI:0.1UF,20%,50V	04222	MA205E104MAA
A8A2C812	283-0648-00			CAP.,FXD,MICA D:10PF,5%,100V	00853	D151C100D0
A8A2CR105	152-0141-02			SEMICOND DVC,DI:SW,SI,30V,150MA,30V,DO-35	01295	1N4152R
A8A2CR106	152-0141-02			SEMICOND DVC,DI:SW,SI,30V,150MA,30V,DO-35	01295	1N4152R
A8A2CR170	152-0457-00			SEMICOND DEVICE:SILICON,25V	28480	5082-2068
A8A2CR226	152-0141-02			SEMICOND DVC,DI:SW,SI,30V,150MA,30V,DO-35	01295	1N4152R
A8A2CR227	152-0141-02			SEMICOND DVC,DI:SW,SI,30V,150MA,30V,DO-35	01295	1N4152R
A8A2CR352	152-0457-00			SEMICOND DEVICE:SILICON,25V	28480	5082-2068
A8A2CR501	152-0141-02			SEMICOND DVC,DI:SW,SI,30V,150MA,30V,DO-35	01295	1N4152R
A8A2CR502	152-0141-02			SEMICOND DVC,DI:SW,SI,30V,150MA,30V,DO-35	01295	1N4152R
A8A2CR620	152-0141-02			SEMICOND DVC,DI:SW,SI,30V,150MA,30V,DO-35	01295	1N4152R
A8A2CR621	152-0141-02			SEMICOND DVC,DI:SW,SI,30V,150MA,30V,DO-35	01295	1N4152R
A8A2CR700	152-0141-02			SEMICOND DVC,DI:SW,SI,30V,150MA,30V,DO-35	01295	1N4152R

Component No.	Tektronix Part No.	Serial/Model No. Eff	Dscont	Name & Description	Mfr Code	Mfr Part Number
A8A2CR701	152-0141-02			SEMICOND DVC,DI:SW,SI,30V,150MA,30V,DO-35	01295	1N4152R
A8A2CR711	152-0141-02			SEMICOND DVC,DI:SW,SI,30V,150MA,30V,DO-35	01295	1N4152R
A8A2Q381	151-0192-03			TRANSISTOR:SILICON,NPN	80009	151-0192-03
A8A2Q382	151-0190-07			TRANSISTOR:SILICON,NPN,SEL	80009	151-0190-07
A8A2Q393	151-0190-07			TRANSISTOR:SILICON,NPN,SEL	80009	151-0190-07
A8A2Q394	151-0188-03			TRANSISTOR:SILICON,PNP,SEL	80009	151-0188-03
A8A2Q462	151-0192-03			TRANSISTOR:SILICON,NPN	80009	151-0192-03
A8A2Q463	151-0190-07			TRANSISTOR:SILICON,NPN,SEL	80009	151-0190-07
A8A2Q473	151-0190-07			TRANSISTOR:SILICON,NPN,SEL	80009	151-0190-07
A8A2Q474	151-0188-03			TRANSISTOR:SILICON,PNP,SEL	80009	151-0188-03
A8A2Q482	151-0192-03			TRANSISTOR:SILICON,NPN	80009	151-0192-03
A8A2Q483	151-0190-07			TRANSISTOR:SILICON,NPN,SEL	80009	151-0190-07
A8A2Q493	151-0190-07			TRANSISTOR:SILICON,NPN,SEL	80009	151-0190-07
A8A2Q494	151-0188-03			TRANSISTOR:SILICON,PNP,SEL	80009	151-0188-03
A8A2Q561	151-0192-03			TRANSISTOR:SILICON,NPN	80009	151-0192-03
A8A2Q562	151-0190-07			TRANSISTOR:SILICON,NPN,SEL	80009	151-0190-07
A8A2Q580	151-0190-07			TRANSISTOR:SILICON,NPN,SEL	80009	151-0190-07
A8A2Q581	151-0188-03			TRANSISTOR:SILICON,PNP,SEL	80009	151-0188-03
A8A2Q712	151-0192-03			TRANSISTOR:SILICON,NPN	80009	151-0192-03
A8A2R101	311-1897-00			RES.,VAR,NONWIR:25K OHM,10%,0.50W	32997	3299W-1-253
A8A2R111	311-1897-00			RES.,VAR,NONWIR:25K OHM,10%,0.50W	32997	3299W-1-253
A8A2R112	321-0306-00			RES.,FXD,FILM:15K OHM,1%,0.125W	91637	MFF1816G15001F
A8A2R113	321-0233-00			RES.,FXD,FILM:2.61K OHM,1%,0.125W	91637	MFF1816G26100F
A8A2R115	321-0233-00			RES.,FXD,FILM:2.61K OHM,1%,0.125W	91637	MFF1816G26100F
A8A2R116	321-0393-00			RES.,FXD,FILM:121K OHM,1%,0.125W	91637	CMF55116G12102F
A8A2R117	321-0306-00			RES.,FXD,FILM:15K OHM,1%,0.125W	91637	MFF1816G15001F
A8A2R118	321-0289-00			RES.,FXD,FILM:10K OHM,1%,0.125W	91637	MFF1816G10001F
A8A2R119	311-1897-00			RES.,VAR,NONWIR:25K OHM,10%,0.50W	32997	3299W-1-253
A8A2R120	321-0289-00			RES.,FXD,FILM:10K OHM,1%,0.125W	91637	MFF1816G10001F
A8A2R121	321-0289-00			RES.,FXD,FILM:10K OHM,1%,0.125W	91637	MFF1816G10001F
A8A2R122	321-0222-00			RES.,FXD,FILM:2K OHM,1%,0.125W	91637	MFF1816G20000F
A8A2R123	321-0357-00			RES.,FXD,FILM:51.1K OHM,1%,0.125W	91637	MFF1816G51101F
A8A2R124	321-0263-00			RES.,FXD,FILM:5.36K OHM,1%,0.125W	91637	MFF1816G53600F
A8A2R125	321-0289-00			RES.,FXD,FILM:10K OHM,1%,0.125W	91637	MFF1816G10001F
A8A2R126	321-0289-00			RES.,FXD,FILM:10K OHM,1%,0.125W	91637	MFF1816G10001F
A8A2R130	321-0233-00			RES.,FXD,FILM:2.61K OHM,1%,0.125W	91637	MFF1816G26100F
A8A2R131	321-0289-00			RES.,FXD,FILM:10K OHM,1%,0.125W	91637	MFF1816G10001F
A8A2R132	321-0233-00			RES.,FXD,FILM:2.61K OHM,1%,0.125W	91637	MFF1816G26100F
A8A2R133	321-0205-00			RES.,FXD,FILM:1.33K OHM,1%,0.125W	91637	MFF1816G13300F
A8A2R134	321-0205-00			RES.,FXD,FILM:1.33K OHM,1%,0.125W	91637	MFF1816G13300F
A8A2R135	321-0380-00			RES.,FXD,FILM:88.7K OHM,1%,0.125W	91637	MFF1816G88701F
A8A2R136	315-0512-00			RES.,FXD,CMPSN:5.1K OHM,5%,0.25W	01121	CB5125
A8A2R140	321-0289-00			RES.,FXD,FILM:10K OHM,1%,0.125W	91637	MFF1816G10001F
A8A2R141	321-0289-00			RES.,FXD,FILM:10K OHM,1%,0.125W	91637	MFF1816G10001F
A8A2R142	311-1897-00			RES.,VAR,NONWIR:25K OHM,10%,0.50W	32997	3299W-1-253
A8A2R143	321-0233-00			RES.,FXD,FILM:2.61K OHM,1%,0.125W	91637	MFF1816G26100F
A8A2R144	321-0233-00			RES.,FXD,FILM:2.61K OHM,1%,0.125W	91637	MFF1816G26100F
A8A2R145	321-0306-00			RES.,FXD,FILM:15K OHM,1%,0.125W	91637	MFF1816G15001F
A8A2R146	321-0393-00			RES.,FXD,FILM:121K OHM,1%,0.125W	91637	CMF55116G12102F
A8A2R150	321-0306-00			RES.,FXD,FILM:15K OHM,1%,0.125W	91637	MFF1816G15001F
A8A2R151	321-0289-00			RES.,FXD,FILM:10K OHM,1%,0.125W	91637	MFF1816G10001F
A8A2R152	321-0289-00			RES.,FXD,FILM:10K OHM,1%,0.125W	91637	MFF1816G10001F
A8A2R153	321-0289-00			RES.,FXD,FILM:10K OHM,1%,0.125W	91637	MFF1816G10001F

Component No.	Tektronix Part No.	Serial/Model No. Eff	Dscont	Name & Description	Mfr Code	Mfr Part Number
A8A2R178	317-0332-00	B020795		RES.,FXD,CMPSN:3.3K OHM,5%,0.125W	01121	BB3325
A8A2R179	317-0332-00	B020795		RES.,FXD,CMPSN:3.3K OHM,5%,0.125W	01121	BB3325
A8A2R180	321-0289-00			RES.,FXD,FILM:10K OHM,1%,0.125W	91637	MFF1816G10001F
A8A2R181	321-0289-00			RES.,FXD,FILM:10K OHM,1%,0.125W	91637	MFF1816G10001F
A8A2R190	315-0512-00			RES.,FXD,CMPSN:5.1K OHM,5%,0.25W	01121	CB5125
A8A2R191	321-0289-00			RES.,FXD,FILM:10K OHM,1%,0.125W	91637	MFF1816G10001F
A8A2R192	315-0512-00			RES.,FXD,CMPSN:5.1K OHM,5%,0.25W	01121	CB5125
A8A2R193	321-0289-00			RES.,FXD,FILM:10K OHM,1%,0.125W	91637	MFF1816G10001F
A8A2R194	315-0271-00	B010135		RES.,FXD,CMPSN:270 OHM,5%,0.25W	01121	CB2715
A8A2R195	315-0271-00	B010135		RES.,FXD,CMPSN:270 OHM,5%,0.25W	01121	CB2715
A8A2R196	315-0271-00	B010135		RES.,FXD,CMPSN:270 OHM,5%,0.25W	01121	CB2715
A8A2R197	315-0271-00	B010135		RES.,FXD,CMPSN:270 OHM,5%,0.25W	01121	CB2715
A8A2R202	321-0306-00			RES.,FXD,FILM:15K OHM,1%,0.125W	91637	MFF1816G15001F
A8A2R213	321-0233-00			RES.,FXD,FILM:2.61K OHM,1%,0.125W	91637	MFF1816G26100F
A8A2R214	321-0233-00			RES.,FXD,FILM:2.61K OHM,1%,0.125W	91637	MFF1816G26100F
A8A2R215	321-0306-00			RES.,FXD,FILM:15K OHM,1%,0.125W	91637	MFF1816G15001F
A8A2R216	321-0289-00			RES.,FXD,FILM:10K OHM,1%,0.125W	91637	MFF1816G10001F
A8A2R217	321-0326-00			RES.,FXD,FILM:24.3K OHM,1%,0.125W	91637	CMF55116G24301F
A8A2R220	311-1896-00			RES.,VAR,NONWIR:5K OHM,10%,0.50W	32997	3299W-1-502
A8A2R222	321-0277-00			RES.,FXD,FILM:7.5K OHM,1%,0.125W	91637	MFF1816G75000F
A8A2R223	321-0318-00			RES.,FXD,FILM:20K OHM,1%,0.125W	91637	MFF1816G20001F
A8A2R230	321-0306-00			RES.,FXD,FILM:15K OHM,1%,0.125W	91637	MFF1816G15001F
A8A2R231	321-0306-00			RES.,FXD,FILM:15K OHM,1%,0.125W	91637	MFF1816G15001F
A8A2R232	321-0289-00			RES.,FXD,FILM:10K OHM,1%,0.125W	91637	MFF1816G10001F
A8A2R233	321-0289-00			RES.,FXD,FILM:10K OHM,1%,0.125W	91637	MFF1816G10001F
A8A2R234	321-0289-00			RES.,FXD,FILM:10K OHM,1%,0.125W	91637	MFF1816G10001F
A8A2R235	321-0289-00			RES.,FXD,FILM:10K OHM,1%,0.125W	91637	MFF1816G10001F
A8A2R240	321-0289-00			RES.,FXD,FILM:10K OHM,1%,0.125W	91637	MFF1816G10001F
A8A2R241	315-0512-00			RES.,FXD,CMPSN:5.1K OHM,5%,0.25W	01121	CB5125
A8A2R242	311-1897-00			RES.,VAR,NONWIR:25K OHM,10%,0.50W	32997	3299W-1-253
A8A2R243	315-0512-00			RES.,FXD,CMPSN:5.1K OHM,5%,0.25W	01121	CB5125
A8A2R250	311-1897-00			RES.,VAR,NONWIR:25K OHM,10%,0.50W	32997	3299W-1-253
A8A2R251	321-0222-00			RES.,FXD,FILM:2K OHM,1%,0.125W	91637	MFF1816G20000F
A8A2R252	321-0337-00			RES.,FXD,FILM:31.6K OHM,1%,0.125W	91637	MFF1816G31601F
A8A2R253	321-0263-00			RES.,FXD,FILM:5.36K OHM,1%,0.125W	91637	MFF1816G53600F
A8A2R254	321-0289-00			RES.,FXD,FILM:10K OHM,1%,0.125W	91637	MFF1816G10001F
A8A2R255	315-0122-00			RES.,FXD,CMPSN:1.2K OHM,5%,0.25W	01121	CB1225
A8A2R256	315-0122-00			RES.,FXD,CMPSN:1.2K OHM,5%,0.25W	01121	CB1225
A8A2R260	321-0289-00			RES.,FXD,FILM:10K OHM,1%,0.125W	91637	MFF1816G10001F
A8A2R261	321-0289-00			RES.,FXD,FILM:10K OHM,1%,0.125W	91637	MFF1816G10001F
A8A2R262	321-0205-00			RES.,FXD,FILM:1.33K OHM,1%,0.125W	91637	MFF1816G13300F
A8A2R263	321-0205-00			RES.,FXD,FILM:1.33K OHM,1%,0.125W	91637	MFF1816G13300F
A8A2R264	321-0350-00			RES.,FXD,FILM:43.2K OHM,1%,0.125W	91637	CMF55116G43201F
A8A2R265	315-0103-00			RES.,FXD,CMPSN:10K OHM,5%,0.25W	01121	CB1035
A8A2R269	317-0332-00	B020795		RES.,FXD,CMPSN:3.3K OHM,5%,0.125W	01121	BB3325
A8A2R270	321-0260-00			RES.,FXD,FILM:4.99K OHM,1%,0.125W	91637	MFF1816G49900F
A8A2R271	321-0260-00			RES.,FXD,FILM:4.99K OHM,1%,0.125W	91637	MFF1816G49900F
A8A2R272	315-0122-00			RES.,FXD,CMPSN:1.2K OHM,5%,0.25W	01121	CB1225
A8A2R273	315-0122-00			RES.,FXD,CMPSN:1.2K OHM,5%,0.25W	01121	CB1225
A8A2R274	321-0289-00			RES.,FXD,FILM:10K OHM,1%,0.125W	91637	MFF1816G10001F
A8A2R280	317-0332-00	B020795		RES.,FXD,CMPSN:3.3K OHM,5%,0.125W	01121	BB3325
A8A2R281	315-0512-00			RES.,FXD,CMPSN:5.1K OHM,5%,0.25W	01121	CB5125
A8A2R282	321-0289-00			RES.,FXD,FILM:10K OHM,1%,0.125W	91637	MFF1816G10001F
A8A2R283	321-0289-00			RES.,FXD,FILM:10K OHM,1%,0.125W	91637	MFF1816G10001F

Component No.	Tektronix Part No.	Serial/Model No. Eff	Dscont	Name & Description	Mfr Code	Mfr Part Number
A8A2R284	315-0271-00	B010135		RES.,FXD,CMPSN:270 OHM,5%,0.25W	01121	CB2715
A8A2R291	315-0271-00	B010135		RES.,FXD,CMPSN:270 OHM,5%,0.25W	01121	CB2715
A8A2R292	315-0512-00			RES.,FXD,CMPSN:5.1K OHM,5%,0.25W	01121	CB5125
A8A2R293	321-0289-00			RES.,FXD,FILM:10K OHM,1%,0.125W	91637	MFF1816G10001F
A8A2R294	315-0271-00	B010135		RES.,FXD,CMPSN:270 OHM,5%,0.25W	01121	CB2715
A8A2R295	315-0271-00	B010135		RES.,FXD,CMPSN:270 OHM,5%,0.25W	01121	CB2715
A8A2R300	311-1943-00			RES.,VAR,NONWIR:10K OHM,10%,0.50W	73138	68WR10K-10A
A8A2R301	321-0393-00			RES.,FXD,FILM:121K OHM,1%,0.125W	91637	CMF55116G12102F
A8A2R302	311-1897-00			RES.,VAR,NONWIR:25K OHM,10%,0.50W	32997	3299W-1-253
A8A2R310	321-0222-00			RES.,FXD,FILM:2K OHM,1%,0.125W	91637	MFF1816G20000F
A8A2R311	321-0312-00			RES.,FXD,FILM:17.4K OHM,1%,0.125W	91637	MFF1816G17401F
A8A2R312	321-0263-00			RES.,FXD,FILM:5.36K OHM,1%,0.125W	91637	MFF1816G53600F
A8A2R313	321-0193-00			RES.,FXD,FILM:1K OHM,1%,0.125W	01121	ORD BY DESCR
A8A2R314	321-0289-00			RES.,FXD,FILM:10K OHM,1%,0.125W	91637	MFF1816G10001F
A8A2R315	321-0319-00			RES.,FXD,FILM:20.5K OHM,1%,0.125W	91637	MFF1816G20501F
A8A2R316	321-0205-00			RES.,FXD,FILM:1.33K OHM,1%,0.125W	91637	MFF1816G13300F
A8A2R320	321-0205-00			RES.,FXD,FILM:1.33K OHM,1%,0.125W	91637	MFF1816G13300F
A8A2R321	315-0512-00			RES.,FXD,CMPSN:5.1K OHM,5%,0.25W	01121	CB5125
A8A2R322	311-1897-00			RES.,VAR,NONWIR:25K OHM,10%,0.50W	32997	3299W-1-253
A8A2R324	311-1897-00			RES.,VAR,NONWIR:25K OHM,10%,0.50W	32997	3299W-1-253
A8A2R328	311-1897-00			RES.,VAR,NONWIR:25K OHM,10%,0.50W	32997	3299W-1-253
A8A2R329	321-0393-00			RES.,FXD,FILM:121K OHM,1%,0.125W	91637	CMF55116G12102F
A8A2R330	321-0222-00			RES.,FXD,FILM:2K OHM,1%,0.125W	91637	MFF1816G20000F
A8A2R331	321-0333-00			RES.,FXD,FILM:28.7K OHM,1%,0.125W	91637	CMF55116G28701F
A8A2R335	321-0263-00			RES.,FXD,FILM:5.36K OHM,1%,0.125W	91637	MFF1816G53600F
A8A2R336	321-0193-00			RES.,FXD,FILM:1K OHM,1%,0.125W	01121	ORD BY DESCR
A8A2R337	321-0289-00			RES.,FXD,FILM:10K OHM,1%,0.125W	91637	MFF1816G10001F
A8A2R338	321-0345-00			RES.,FXD,FILM:38.3K OHM,1%,0.125W	91637	CMF55116G38301F
A8A2R340	321-0205-00			RES.,FXD,FILM:1.33K OHM,1%,0.125W	91637	MFF1816G13300F
A8A2R341	321-0205-00			RES.,FXD,FILM:1.33K OHM,1%,0.125W	91637	MFF1816G13300F
A8A2R342	315-0102-00			RES.,FXD,CMPSN:1K OHM,5%,0.25W	01121	CB1025
A8A2R343	321-0289-00			RES.,FXD,FILM:10K OHM,1%,0.125W	91637	MFF1816G10001F
A8A2R350	315-0101-00			RES.,FXD,CMPSN:100 OHM,5%,0.25W	01121	CB1015
A8A2R352	321-0260-00			RES.,FXD,FILM:4.99K OHM,1%,0.125W	91637	MFF1816G49900F
A8A2R353	321-0260-00			RES.,FXD,FILM:4.99K OHM,1%,0.125W	91637	MFF1816G49900F
A8A2R360	321-0260-00			RES.,FXD,FILM:4.99K OHM,1%,0.125W	91637	MFF1816G49900F
A8A2R361	321-0260-00			RES.,FXD,FILM:4.99K OHM,1%,0.125W	91637	MFF1816G49900F
A8A2R370	321-0260-00			RES.,FXD,FILM:4.99K OHM,1%,0.125W	91637	MFF1816G49900F
A8A2R371	315-0242-00			RES.,FXD,CMPSN:2.4K OHM,5%,0.25W	01121	CB2425
A8A2R380	315-0242-00			RES.,FXD,CMPSN:2.4K OHM,5%,0.25W	01121	CB2425
A8A2R381	321-0260-00			RES.,FXD,FILM:4.99K OHM,1%,0.125W	91637	MFF1816G49900F
A8A2R390	321-0193-07			RES.,FXD,FILM:1K OHM,0.1%,0.125W	91637	MFF1816C10000B
A8A2R391	321-0193-07			RES.,FXD,FILM:1K OHM,0.1%,0.125W	91637	MFF1816C10000B
A8A2R392	321-0073-00			RES.,FXD,FILM:56.2 OHM,1%,0.125W	91637	MFF1816G56R20F
A8A2R393	321-0073-00			RES.,FXD,FILM:56.2 OHM,1%,0.125W	91637	MFF1816G56R20F
A8A2R394	315-0103-00			RES.,FXD,CMPSN:10K OHM,5%,0.25W	01121	CB1035
A8A2R396	315-0103-00			RES.,FXD,CMPSN:10K OHM,5%,0.25W	01121	CB1035
A8A2R400	321-0393-00			RES.,FXD,FILM:121K OHM,1%,0.125W	91637	CMF55116G12102F
A8A2R401	321-0306-00			RES.,FXD,FILM:15K OHM,1%,0.125W	91637	MFF1816G15001F
A8A2R402	321-0233-00			RES.,FXD,FILM:2.61K OHM,1%,0.125W	91637	MFF1816G26100F
A8A2R403	311-1943-00			RES.,VAR,NONWIR:10K OHM,10%,0.50W	73138	68WR10K-10A
A8A2R410	321-0233-00			RES.,FXD,FILM:2.61K OHM,1%,0.125W	91637	MFF1816G26100F
A8A2R411	321-0306-00			RES.,FXD,FILM:15K OHM,1%,0.125W	91637	MFF1816G15001F
A8A2R412	321-0289-00			RES.,FXD,FILM:10K OHM,1%,0.125W	91637	MFF1816G10001F

Component No.	Tektronix Part No.	Serial/Model No. Eff	Dscont	Name & Description	Mfr Code	Mfr Part Number
A8A2R413	321-0319-00			RES.,FXD,FILM:20.5K OHM,1%,0.125W	91637	MFF1816G20501F
A8A2R421	321-0306-00			RES.,FXD,FILM:15K OHM,1%,0.125W	91637	MFF1816G15001F
A8A2R422	321-0233-00			RES.,FXD,FILM:2.61K OHM,1%,0.125W	91637	MFF1816G26100F
A8A2R423	321-0233-00			RES.,FXD,FILM:2.61K OHM,1%,0.125W	91637	MFF1816G26100F
A8A2R424	321-0306-00			RES.,FXD,FILM:15K OHM,1%,0.125W	91637	MFF1816G15001F
A8A2R425	311-1897-00			RES.,VAR,NONWIR:25K OHM,10%,0.50W	32997	3299W-1-253
A8A2R426	321-0393-00			RES.,FXD,FILM:121K OHM,1%,0.125W	91637	CMF55116G12102F
A8A2R431	321-0289-00			RES.,FXD,FILM:10K OHM,1%,0.125W	91637	MFF1816G10001F
A8A2R432	321-0289-00			RES.,FXD,FILM:10K OHM,1%,0.125W	91637	MFF1816G10001F
A8A2R433	321-0289-00			RES.,FXD,FILM:10K OHM,1%,0.125W	91637	MFF1816G10001F
A8A2R434	321-0380-00			RES.,FXD,FILM:88.7K OHM,1%,0.125W	91637	MFF1816G88701F
A8A2R440	315-0271-00	B010135		RES.,FXD,CMPSN:270 OHM,5%,0.25W	01121	CB2715
A8A2R441	315-0102-00			RES.,FXD,CMPSN:1K OHM,5%,0.25W	01121	CB1025
A8A2R444	321-0289-00			RES.,FXD,FILM:10K OHM,1%,0.125W	91637	MFF1816G10001F
A8A2R445	321-0289-00			RES.,FXD,FILM:10K OHM,1%,0.125W	91637	MFF1816G10001F
A8A2R446	315-0512-00			RES.,FXD,CMPSN:5.1K OHM,5%,0.25W	01121	CB5125
A8A2R447	315-0271-00	B010135		RES.,FXD,CMPSN:270 OHM,5%,0.25W	01121	CB2715
A8A2R455	315-0242-00			RES.,FXD,CMPSN:2.4K OHM,5%,0.25W	01121	CB2425
A8A2R462	321-0260-00			RES.,FXD,FILM:4.99K OHM,1%,0.125W	91637	MFF1816G49900F
A8A2R470	321-0193-07			RES.,FXD,FILM:1K OHM,0.1%,0.125W	91637	MFF1816C10000B
A8A2R471	321-0193-07			RES.,FXD,FILM:1K OHM,0.1%,0.125W	91637	MFF1816C10000B
A8A2R472	321-0073-00			RES.,FXD,FILM:56.2 OHM,1%,0.125W	91637	MFF1816G56R20F
A8A2R473	321-0073-00			RES.,FXD,FILM:56.2 OHM,1%,0.125W	91637	MFF1816G56R20F
A8A2R480	315-0103-00			RES.,FXD,CMPSN:10K OHM,5%,0.25W	01121	CB1035
A8A2R481	315-0103-00			RES.,FXD,CMPSN:10K OHM,5%,0.25W	01121	CB1035
A8A2R490	321-0193-07			RES.,FXD,FILM:1K OHM,0.1%,0.125W	91637	MFF1816C10000B
A8A2R491	321-0193-07			RES.,FXD,FILM:1K OHM,0.1%,0.125W	91637	MFF1816C10000B
A8A2R492	321-0073-00			RES.,FXD,FILM:56.2 OHM,1%,0.125W	91637	MFF1816G56R20F
A8A2R493	321-0073-00			RES.,FXD,FILM:56.2 OHM,1%,0.125W	91637	MFF1816G56R20F
A8A2R494	315-0103-00			RES.,FXD,CMPSN:10K OHM,5%,0.25W	01121	CB1035
A8A2R495	315-0103-00			RES.,FXD,CMPSN:10K OHM,5%,0.25W	01121	CB1035
A8A2R496	315-0622-00			RES.,FXD,CMPSN:6.2K OHM,5%,0.25W	01121	CB6225
A8A2R497	308-0836-00			RES.,FXD,WW:1.2 OHM,5%,1W,FUSIBLE	75042	BW-20F-1.2 OHM
A8A2R498	308-0836-00			RES.,FXD,WW:1.2 OHM,5%,1W,FUSIBLE	75042	BW-20F-1.2 OHM
A8A2R500	311-1897-00			RES.,VAR,NONWIR:25K OHM,10%,0.50W	32997	3299W-1-253
A8A2R510	321-0222-00			RES.,FXD,FILM:2K OHM,1%,0.125W	91637	MFF1816G20000F
A8A2R511	321-0312-00			RES.,FXD,FILM:17.4K OHM,1%,0.125W	91637	MFF1816G17401F
A8A2R512	321-0263-00			RES.,FXD,FILM:5.36K OHM,1%,0.125W	91637	MFF1816G53600F
A8A2R513	321-0193-00			RES.,FXD,FILM:1K OHM,1%,0.125W	01121	ORD BY DESCR
A8A2R514	321-0289-00			RES.,FXD,FILM:10K OHM,1%,0.125W	91637	MFF1816G10001F
A8A2R515	321-0205-00			RES.,FXD,FILM:1.33K OHM,1%,0.125W	91637	MFF1816G13300F
A8A2R516	321-0205-00			RES.,FXD,FILM:1.33K OHM,1%,0.125W	91637	MFF1816G13300F
A8A2R521	311-1897-00			RES.,VAR,NONWIR:25K OHM,10%,0.50W	32997	3299W-1-253
A8A2R522	321-0222-00			RES.,FXD,FILM:2K OHM,1%,0.125W	91637	MFF1816G20000F
A8A2R523	321-0357-00			RES.,FXD,FILM:51.1K OHM,1%,0.125W	91637	MFF1816G51101F
A8A2R524	311-1897-00			RES.,VAR,NONWIR:25K OHM,10%,0.50W	32997	3299W-1-253
A8A2R530	321-0263-00			RES.,FXD,FILM:5.36K OHM,1%,0.125W	91637	MFF1816G53600F
A8A2R531	321-0289-00			RES.,FXD,FILM:10K OHM,1%,0.125W	91637	MFF1816G10001F
A8A2R532	321-0289-00			RES.,FXD,FILM:10K OHM,1%,0.125W	91637	MFF1816G10001F
A8A2R533	321-0289-00			RES.,FXD,FILM:10K OHM,1%,0.125W	91637	MFF1816G10001F
A8A2R534	321-0205-00			RES.,FXD,FILM:1.33K OHM,1%,0.125W	91637	MFF1816G13300F
A8A2R535	321-0205-00			RES.,FXD,FILM:1.33K OHM,1%,0.125W	91637	MFF1816G13300F
A8A2R555	315-0242-00			RES.,FXD,CMPSN:2.4K OHM,5%,0.25W	01121	CB2425
A8A2R560	321-0260-00			RES.,FXD,FILM:4.99K OHM,1%,0.125W	91637	MFF1816G49900F

Component No.	Tektronix Part No.	Serial/Model No. Eff	Dscont	Name & Description	Mfr Code	Mfr Part Number
A8A2R571	321-0193-07			RES.,FXD,FILM:1K OHM,0.1%,0.125W	91637	MFF1816C10000B
A8A2R572	321-0193-07			RES.,FXD,FILM:1K OHM,0.1%,0.125W	91637	MFF1816C10000B
A8A2R573	321-0073-00			RES.,FXD,FILM:56.2 OHM,1%,0.125W	91637	MFF1816G56R20F
A8A2R574	321-0073-00			RES.,FXD,FILM:56.2 OHM,1%,0.125W	91637	MFF1816G56R20F
A8A2R581	315-0103-00			RES.,FXD,CMPSN:10K OHM,5%,0.25W	01121	CB1035
A8A2R582	315-0103-00			RES.,FXD,CMPSN:10K OHM,5%,0.25W	01121	CB1035
A8A2R594	315-0102-00			RES.,FXD,CMPSN:1K OHM,5%,0.25W	01121	CB1025
A8A2R595	321-1296-07			RES.,FXD,FILM:12K OHM,0.1%,0.125W	91637	MFF1816C12001B
A8A2R596	321-1296-07			RES.,FXD,FILM:12K OHM,0.1%,0.125W	91637	MFF1816C12001B
A8A2R604	321-0393-00			RES.,FXD,FILM:121K OHM,1%,0.125W	91637	CMF55116G12102F
A8A2R610	321-0289-00			RES.,FXD,FILM:10K OHM,1%,0.125W	91637	MFF1816G10001F
A8A2R611	321-0289-00			RES.,FXD,FILM:10K OHM,1%,0.125W	91637	MFF1816G10001F
A8A2R614	315-0512-00			RES.,FXD,CMPSN:5.1K OHM,5%,0.25W	01121	CB5125
A8A2R621	321-0318-00			RES.,FXD,FILM:20K OHM,1%,0.125W	91637	MFF1816G20001F
A8A2R623	321-0306-00			RES.,FXD,FILM:15K OHM,1%,0.125W	91637	MFF1816G15001F
A8A2R624	311-1897-00			RES.,VAR,NONWIR:25K OHM,10%,0.50W	32997	3299W-1-253
A8A2R625	311-1897-00			RES.,VAR,NONWIR:25K OHM,10%,0.50W	32997	3299W-1-253
A8A2R630	321-0233-00			RES.,FXD,FILM:2.61K OHM,1%,0.125W	91637	MFF1816G26100F
A8A2R631	321-0233-00			RES.,FXD,FILM:2.61K OHM,1%,0.125W	91637	MFF1816G26100F
A8A2R632	321-0306-00			RES.,FXD,FILM:15K OHM,1%,0.125W	91637	MFF1816G15001F
A8A2R633	321-0289-00			RES.,FXD,FILM:10K OHM,1%,0.125W	91637	MFF1816G10001F
A8A2R634	321-0289-00			RES.,FXD,FILM:10K OHM,1%,0.125W	91637	MFF1816G10001F
A8A2R636	321-0345-00			RES.,FXD,FILM:38.3K OHM,1%,0.125W	91637	CMF55116G38301F
A8A2R640	321-0289-00			RES.,FXD,FILM:10K OHM,1%,0.125W	91637	MFF1816G10001F
A8A2R642	315-0512-00			RES.,FXD,CMPSN:5.1K OHM,5%,0.25W	01121	CB5125
A8A2R643	321-0289-00			RES.,FXD,FILM:10K OHM,1%,0.125W	91637	MFF1816G10001F
A8A2R644	315-0512-00			RES.,FXD,CMPSN:5.1K OHM,5%,0.25W	01121	CB5125
A8A2R645	315-0271-00	B010135		RES.,FXD,CMPSN:270 OHM,5%,0.25W	01121	CB2715
A8A2R646	315-0271-00	B010135		RES.,FXD,CMPSN:270 OHM,5%,0.25W	01121	CB2715
A8A2R701	321-0393-00			RES.,FXD,FILM:121K OHM,1%,0.125W	91637	CMF55116G12102F
A8A2R702	315-0112-00			RES.,FXD,CMPSN:1.1K OHM,5%,0.25W	01121	CB1125
A8A2R703	315-0363-00			RES.,FXD,CMPSN:36K OHM,5%,0.25W	01121	CB3635
A8A2R713	315-0112-00			RES.,FXD,CMPSN:1.1K OHM,5%,0.25W	01121	CB1125
A8A2R723	311-1897-00			RES.,VAR,NONWIR:25K OHM,10%,0.50W	32997	3299W-1-253
A8A2R724	321-0393-00			RES.,FXD,FILM:121K OHM,1%,0.125W	91637	CMF55116G12102F
A8A2R725	321-0222-00			RES.,FXD,FILM:2K OHM,1%,0.125W	91637	MFF1816G20000F
A8A2R730	321-0333-00			RES.,FXD,FILM:28.7K OHM,1%,0.125W	91637	CMF55116G28701F
A8A2R731	321-0263-00			RES.,FXD,FILM:5.36K OHM,1%,0.125W	91637	MFF1816G53600F
A8A2R732	321-0193-00			RES.,FXD,FILM:1K OHM,1%,0.125W	01121	ORD BY DESCR
A8A2R733	321-0289-00			RES.,FXD,FILM:10K OHM,1%,0.125W	91637	MFF1816G10001F
A8A2R734	321-0205-00			RES.,FXD,FILM:1.33K OHM,1%,0.125W	91637	MFF1816G13300F
A8A2R735	321-0205-00			RES.,FXD,FILM:1.33K OHM,1%,0.125W	91637	MFF1816G13300F
A8A2R805	311-1896-00			RES.,VAR,NONWIR:5K OHM,10%,0.50W	32997	3299W-1-502
A8A2R815	321-0277-00			RES.,FXD,FILM:7.5K OHM,1%,0.125W	91637	MFF1816G75000F
A8A2R816	321-0325-00			RES.,FXD,FILM:23.7K OHM,1%,0.125W	91637	MFF1816G23701F
A8A2R817	315-0512-00			RES.,FXD,CMPSN:5.1K OHM,5%,0.25W	01121	CB5125
A8A2R821	315-0152-00			RES.,FXD,CMPSN:1.5K OHM,5%,0.25W	01121	CB1525
A8A2R822	315-0152-00			RES.,FXD,CMPSN:1.5K OHM,5%,0.25W	01121	CB1525
A8A2R825	311-2126-00			RES.,VAR,NONWIR:10K OHM,20%,0.5W,DPST	01121	20M704
A8A2R828	321-0193-00			RES.,FXD,FILM:1K OHM,1%,0.125W	01121	ORD BY DESCR
A8A2R829	315-0122-00			RES.,FXD,CMPSN:1.2K OHM,5%,0.25W	01121	CB1225
A8A2R830	321-0193-00			RES.,FXD,FILM:1K OHM,1%,0.125W	01121	ORD BY DESCR
A8A2R833	311-2126-00			RES.,VAR,NONWIR:10K OHM,20%,0.5W,DPST	01121	20M704
A8A2U125	156-0407-02			MICROCIRCUIT,LI:4-QUAD MULTI,SCREENED	04713	MC1495LDS

Component No.	Tektronix Part No.	Serial/Model No. Eff	Dscont	Name & Description	Mfr Code	Mfr Part Number
A8A2U130	156-0158-03			MICROCIRCUIT,LI:DUAL OPNL AMPL,CHK	80009	156-0158-03
A8A2U150	156-0407-02			MICROCIRCUIT,LI:4-QUAD MULTI,SCREENED	04713	MC1495LDS
A8A2U160	156-0742-02			MICROCIRCUIT,LI:OPERATIONAL AMPLIFIER,SEL	01295	LM318JG
A8A2U175	156-0644-03			MICROCIRCUIT,DI:QUAD BILATERAL SW,BURN-IN	80009	156-0644-03
A8A2U185	156-0742-02			MICROCIRCUIT,LI:OPERATIONAL AMPLIFIER,SEL	01295	LM318JG
A8A2U189	156-0742-02			MICROCIRCUIT,LI:OPERATIONAL AMPLIFIER,SEL	01295	LM318JG
A8A2U192	156-0742-02			MICROCIRCUIT,LI:OPERATIONAL AMPLIFIER,SEL	01295	LM318JG
A8A2U195	156-0742-02			MICROCIRCUIT,LI:OPERATIONAL AMPLIFIER,SEL	01295	LM318JG
A8A2U217	156-0407-02			MICROCIRCUIT,LI:4-QUAD MULTI,SCREENED	04713	MC1495LDS
A8A2U220	156-0158-03			MICROCIRCUIT,LI:DUAL OPNL AMPL,CHK	80009	156-0158-03
A8A2U235	156-0407-02			MICROCIRCUIT,LI:4-QUAD MULTI,SCREENED	04713	MC1495LDS
A8A2U237	156-0158-03			MICROCIRCUIT,LI:DUAL OPNL AMPL,CHK	80009	156-0158-03
A8A2U253	156-1226-00			MICROCIRCUIT,LI:DUAL COMPARATOR,14 DIP	34335	AM319D
A8A2U261	156-1226-00			MICROCIRCUIT,LI:DUAL COMPARATOR,14 DIP	34335	AM319D
A8A2U271	156-0644-03			MICROCIRCUIT,DI:QUAD BILATERAL SW,BURN-IN	80009	156-0644-03
A8A2U275	156-0742-02			MICROCIRCUIT,LI:OPERATIONAL AMPLIFIER,SEL	01295	LM318JG
A8A2U290	156-0742-02			MICROCIRCUIT,LI:OPERATIONAL AMPLIFIER,SEL	01295	LM318JG
A8A2U291	156-0742-02			MICROCIRCUIT,LI:OPERATIONAL AMPLIFIER,SEL	01295	LM318JG
A8A2U292	156-0742-02			MICROCIRCUIT,LI:OPERATIONAL AMPLIFIER,SEL	01295	LM318JG
A8A2U360	156-0644-03			MICROCIRCUIT,DI:QUAD BILATERAL SW,BURN-IN	80009	156-0644-03
A8A2U370	156-0158-03			MICROCIRCUIT,LI:DUAL OPNL AMPL,CHK	80009	156-0158-03
A8A2U414	156-0407-02			MICROCIRCUIT,LI:4-QUAD MULTI,SCREENED	04713	MC1495LDS
A8A2U416	156-0742-02			MICROCIRCUIT,LI:OPERATIONAL AMPLIFIER,SEL	01295	LM318JG
A8A2U427	156-0407-02			MICROCIRCUIT,LI:4-QUAD MULTI,SCREENED	04713	MC1495LDS
A8A2U435	156-0317-00			MICROCIRCUIT,LI:OPERATIONAL AMPLIFIER	34371	HA2-2625-5
A8A2U441	156-0742-02			MICROCIRCUIT,LI:OPERATIONAL AMPLIFIER,SEL	01295	LM318JG
A8A2U456	156-0742-02			MICROCIRCUIT,LI:OPERATIONAL AMPLIFIER,SEL	01295	LM318JG
A8A2U542	156-0742-02			MICROCIRCUIT,LI:OPERATIONAL AMPLIFIER,SEL	01295	LM318JG
A8A2U560	156-0742-02			MICROCIRCUIT,LI:OPERATIONAL AMPLIFIER,SEL	01295	LM318JG
A8A2U590	156-0285-01			MICROCIRCUIT,LI:VOLTAGE REGULATOR,CHK	04713	MC7812CTD
A8A2U593	156-0872-01			MICROCIRCUIT,LI:VOLTAGE REGULATOR	04713	MC7912CTD
A8A2U595	156-0067-13			MICROCIRCUIT,LI:OPNL AMPL,SELECTED	01295	UA741CJG4
A8A2U612	156-0742-02			MICROCIRCUIT,LI:OPERATIONAL AMPLIFIER,SEL	01295	LM318JG
A8A2U637	156-0407-02			MICROCIRCUIT,LI:4-QUAD MULTI,SCREENED	04713	MC1495LDS
A8A2U638	156-0742-02			MICROCIRCUIT,LI:OPERATIONAL AMPLIFIER,SEL	01295	LM318JG
A8A2U712	156-0742-02			MICROCIRCUIT,LI:OPERATIONAL AMPLIFIER,SEL	01295	LM318JG
A8A2W105	131-0566-00			BUS CONDUCTOR:DUMMY RES,2.375,22 AWG	57668	JWW-0200E0
A8A2W351	131-0566-00	B010100	B010158	BUS CONDUCTOR:DUMMY RES,2.375,22 AWG	57668	JWW-0200E0
A8A2W501	131-0566-00			BUS CONDUCTOR:DUMMY RES,2.375,22 AWG	57668	JWW-0200E0
A8A2W700	131-0566-00			BUS CONDUCTOR:DUMMY RES,2.375,22 AWG	57668	JWW-0200E0

Component No.	Tektronix Part No.	Serial/Model No. Eff	Dscont	Name & Description	Mfr Code	Mfr Part Number
A9A1	670-6353-00	B010100	B020831	CKT BOARD ASSY:RASTER CONTROL	80009	670-6353-00
A9A1	670-6353-03	B020832		CKT BOARD ASSY:RASTER CONTROL	80009	670-6353-03
A9A1C120	281-0775-00			CAP.,FXD,CER DI:0.1UF,20%,50V	04222	MA205E104MAA
A9A1C130	281-0775-00			CAP.,FXD,CER DI:0.1UF,20%,50V	04222	MA205E104MAA
A9A1C131	281-0593-00			CAP.,FXD,CER DI:3.9PF,10%,500V	04222	7001-C0J-3R9C
A9A1C140	281-0775-00			CAP.,FXD,CER DI:0.1UF,20%,50V	04222	MA205E104MAA
A9A1C210	290-0770-00			CAP.,FXD,ELCTLT:100UF,+50-10%,25V	56289	502D230
A9A1C211	290-0770-00			CAP.,FXD,ELCTLT:100UF,+50-10%,25V	56289	502D230
A9A1C220	290-0778-00			CAP.,FXD,ELCTLT:1UF,+50-10%,50V	54473	ECE-A50N1
A9A1C221	281-0775-00			CAP.,FXD,CER DI:0.1UF,20%,50V	04222	MA205E104MAA
A9A1C222	283-0616-00			CAP.,FXD,MICA D:75PF,5%,500V	00853	D155E750J0
A9A1C223	281-0775-00			CAP.,FXD,CER DI:0.1UF,20%,50V	04222	MA205E104MAA
A9A1C230	281-0775-00			CAP.,FXD,CER DI:0.1UF,20%,50V	04222	MA205E104MAA
A9A1C231	281-0775-00			CAP.,FXD,CER DI:0.1UF,20%,50V	04222	MA205E104MAA
A9A1C240	281-0775-00			CAP.,FXD,CER DI:0.1UF,20%,50V	04222	MA205E104MAA
A9A1C241	283-0616-00			CAP.,FXD,MICA D:75PF,5%,500V	00853	D155E750J0
A9A1C242	290-0778-00			CAP.,FXD,ELCTLT:1UF,+50-10%,50V	54473	ECE-A50N1
A9A1C243	281-0775-00			CAP.,FXD,CER DI:0.1UF,20%,50V	04222	MA205E104MAA
A9A1C250	290-0778-00			CAP.,FXD,ELCTLT:1UF,+50-10%,50V	54473	ECE-A50N1
A9A1C251	281-0775-00			CAP.,FXD,CER DI:0.1UF,20%,50V	04222	MA205E104MAA
A9A1C252	281-0775-00			CAP.,FXD,CER DI:0.1UF,20%,50V	04222	MA205E104MAA
A9A1C310	290-0778-00			CAP.,FXD,ELCTLT:1UF,+50-10%,50V	54473	ECE-A50N1
A9A1C330	283-0689-00			CAP.,FXD,MICA D:550PF,1%,300V	00853	D153F551F0
A9A1C331	281-0775-00			CAP.,FXD,CER DI:0.1UF,20%,50V	04222	MA205E104MAA
A9A1C340	290-0778-00			CAP.,FXD,ELCTLT:1UF,+50-10%,50V	54473	ECE-A50N1
A9A1C341	281-0775-00			CAP.,FXD,CER DI:0.1UF,20%,50V	04222	MA205E104MAA
A9A1C342	283-0689-00			CAP.,FXD,MICA D:550PF,1%,300V	00853	D153F551F0
A9A1C350	283-0203-00			CAP.,FXD,CER DI:0.47UF,20%,50V	04222	5R305SE474MAA
A9A1C352	281-0775-00			CAP.,FXD,CER DI:0.1UF,20%,50V	04222	MA205E104MAA
A9A1C353	290-0804-00			CAP.,FXD,ELCTLT:10UF,+50-10%,25V	55680	ULA1E100TEA
A9A1C410	290-0770-00			CAP.,FXD,ELCTLT:100UF,+50-10%,25V	56289	502D230
A9A1C411	290-0770-00			CAP.,FXD,ELCTLT:100UF,+50-10%,25V	56289	502D230
A9A1C420	283-0203-00			CAP.,FXD,CER DI:0.47UF,20%,50V	04222	5R305SE474MAA
A9A1C430	281-0775-00			CAP.,FXD,CER DI:0.1UF,20%,50V	04222	MA205E104MAA
A9A1C440	283-0648-00			CAP.,FXD,MICA D:10PF,5%,100V	00853	D151C100D0
A9A1C441	283-0648-00			CAP.,FXD,MICA D:10PF,5%,100V	00853	D151C100D0
A9A1C442	281-0775-00			CAP.,FXD,CER DI:0.1UF,20%,50V	04222	MA205E104MAA
A9A1C443	281-0775-00			CAP.,FXD,CER DI:0.1UF,20%,50V	04222	MA205E104MAA
A9A1C450	281-0775-00			CAP.,FXD,CER DI:0.1UF,20%,50V	04222	MA205E104MAA
A9A1C451	281-0775-00			CAP.,FXD,CER DI:0.1UF,20%,50V	04222	MA205E104MAA
A9A1C510	290-0770-00			CAP.,FXD,ELCTLT:100UF,+50-10%,25V	56289	502D230
A9A1C520	290-0778-00			CAP.,FXD,ELCTLT:1UF,+50-10%,50V	54473	ECE-A50N1
A9A1C521	281-0775-00			CAP.,FXD,CER DI:0.1UF,20%,50V	04222	MA205E104MAA
A9A1C522	283-0114-00			CAP.,FXD,CER DI:0.0015UF,5%,200V	59660	805534Y5DO152J
A9A1C530	290-0778-00			CAP.,FXD,ELCTLT:1UF,+50-10%,50V	54473	ECE-A50N1
A9A1C531	290-0290-00			CAP.,FXD,ELCTLT:10UF,20%,25V	56289	30D472
A9A1C532	290-0782-00			CAP.,FXD,ELCTLT:4.7UF,+75-10%,35V	55680	ULA1V4R7TEA
A9A1C540	290-0804-00			CAP.,FXD,ELCTLT:10UF,+50-10%,25V	55680	ULA1E100TEA
A9A1C541	281-0775-00			CAP.,FXD,CER DI:0.1UF,20%,50V	04222	MA205E104MAA
A9A1C542	281-0775-00			CAP.,FXD,CER DI:0.1UF,20%,50V	04222	MA205E104MAA
A9A1C543	281-0775-00			CAP.,FXD,CER DI:0.1UF,20%,50V	04222	MA205E104MAA
A9A1C550	281-0775-00			CAP.,FXD,CER DI:0.1UF,20%,50V	04222	MA205E104MAA
A9A1C551	281-0775-00			CAP.,FXD,CER DI:0.1UF,20%,50V	04222	MA205E104MAA
A9A1C630	281-0775-00			CAP.,FXD,CER DI:0.1UF,20%,50V	04222	MA205E104MAA

Component No.	Tektronix Part No.	Serial/Model No. Eff	Dscont	Name & Description	Mfr Code	Mfr Part Number
A9A1C631	281-0775-00			CAP.,FXD,CER DI:0.1UF,20%,50V	04222	MA205E104MAA
A9A1C632	281-0775-00			CAP.,FXD,CER DI:0.1UF,20%,50V	04222	MA205E104MAA
A9A1C633	283-0164-00			CAP.,FXD,CER DI:2.2UF,20%,25V	04222	SR402E225MAA
A9A1C634	290-0778-00			CAP.,FXD,ELCTLT:1UF,+50-10%,50V	54473	ECE-A50N1
A9A1C640	281-0775-00			CAP.,FXD,CER DI:0.1UF,20%,50V	04222	MA205E104MAA
A9A1C641	281-0775-00			CAP.,FXD,CER DI:0.1UF,20%,50V	04222	MA205E104MAA
A9A1C650	290-0778-00			CAP.,FXD,ELCTLT:1UF,+50-10%,50V	54473	ECE-A50N1
A9A1C651	290-0290-00			CAP.,FXD,ELCTLT:10UF,20%,25V	56289	30D472
A9A1C721	285-0905-00			CAP.,FXD,PLSTC:0.33UF,5%,50V	56289	LP66A1A334J002
A9A1C730	285-1062-00			CAP.,FXD,PLSTC:0.005UF,0.1%,200V	19396	502F02PP460
A9A1C731	281-0775-00			CAP.,FXD,CER DI:0.1UF,20%,50V	04222	MA205E104MAA
A9A1C732	283-0190-00			CAP.,FXD,CER DI:0.47UF,5%,50V	72982	8141N077X7R0474J
A9A1C740	283-0603-00			CAP.,FXD,MICA D:113PF,2%,300V	00853	D155F1130G0
A9A1C750	281-0775-00			CAP.,FXD,CER DI:0.1UF,20%,50V	04222	MA205E104MAA
A9A1C751	281-0775-00			CAP.,FXD,CER DI:0.1UF,20%,50V	04222	MA205E104MAA
A9A1C752	281-0775-00			CAP.,FXD,CER DI:0.1UF,20%,50V	04222	MA205E104MAA
A9A1C830	283-0110-00			CAP.,FXD,CER DI:0.005UF,+80-20%,150V	59660	855-547-E-502Z
A9A1C840	290-0290-00			CAP.,FXD,ELCTLT:10UF,20%,25V	56289	30D472
A9A1C841	285-0918-00			CAP.,FXD,PLSTC:0.001UF,5%,200 V	56289	LP66A1C102J002
A9A1C842	283-0603-00			CAP.,FXD,MICA D:113PF,2%,300V	00853	D155F1130G0
A9A1C843	283-0164-00			CAP.,FXD,CER DI:2.2UF,20%,25V	04222	SR402E225MAA
A9A1C843	----- -----			(ENDED USAGE 670-6353-00 ONLY)		
A9A1C843	283-0179-00			CAP.,FXD,CER DI:0.68UF,10%,100V	56289	3C37X5R684K100B
A9A1C843	----- -----			(BEGAN USAGE 670-6353-03 ONLY)		
A9A1C850	285-0918-00			CAP.,FXD,PLSTC:0.001UF,5%,200 V	56289	LP66A1C102J002
A9A1C851	290-0778-00			CAP.,FXD,ELCTLT:1UF,+50-10%,50V	54473	ECE-A50N1
A9A1C920	290-0778-00			CAP.,FXD,ELCTLT:1UF,+50-10%,50V	54473	ECE-A50N1
A9A1C930	281-0775-00			CAP.,FXD,CER DI:0.1UF,20%,50V	04222	MA205E104MAA
A9A1C931	283-0603-00			CAP.,FXD,MICA D:113PF,2%,300V	00853	D155F1130G0
A9A1C940	290-0778-00			CAP.,FXD,ELCTLT:1UF,+50-10%,50V	54473	ECE-A50N1
A9A1C950	285-0595-00			CAP.,FXD,PLSTC:0.1UF,1%,100V	84171	P1270-1
A9A1CR120	152-0141-02			SEMICOND DVC,DI:SW,SI,30V,150MA,30V,DO-35	01295	1N4152R
A9A1CR150	152-0246-01			SEMICOND DEVICE:SILICON,SW,40V,200MA,TEST	80009	152-0246-01
A9A1CR241	152-0141-02			SEMICOND DVC,DI:SW,SI,30V,150MA,30V,DO-35	01295	1N4152R
A9A1CR242	152-0246-01			SEMICOND DEVICE:SILICON,SW,40V,200MA,TEST	80009	152-0246-01
A9A1CR250	152-0141-02			SEMICOND DVC,DI:SW,SI,30V,150MA,30V,DO-35	01295	1N4152R
A9A1CR340	152-0141-02			SEMICOND DVC,DI:SW,SI,30V,150MA,30V,DO-35	01295	1N4152R
A9A1CR341	152-0141-02			SEMICOND DVC,DI:SW,SI,30V,150MA,30V,DO-35	01295	1N4152R
A9A1CR342	152-0141-02			SEMICOND DVC,DI:SW,SI,30V,150MA,30V,DO-35	01295	1N4152R
A9A1CR343	152-0141-02			SEMICOND DVC,DI:SW,SI,30V,150MA,30V,DO-35	01295	1N4152R
A9A1CR430	152-0141-02			SEMICOND DVC,DI:SW,SI,30V,150MA,30V,DO-35	01295	1N4152R
A9A1CR431	152-0141-02			SEMICOND DVC,DI:SW,SI,30V,150MA,30V,DO-35	01295	1N4152R
A9A1CR520	152-0141-02			SEMICOND DVC,DI:SW,SI,30V,150MA,30V,DO-35	01295	1N4152R
A9A1CR521	152-0141-02			SEMICOND DVC,DI:SW,SI,30V,150MA,30V,DO-35	01295	1N4152R
A9A1CR530	152-0141-02			SEMICOND DVC,DI:SW,SI,30V,150MA,30V,DO-35	01295	1N4152R
A9A1CR540	152-0141-02			SEMICOND DVC,DI:SW,SI,30V,150MA,30V,DO-35	01295	1N4152R
A9A1CR550	152-0141-02			SEMICOND DVC,DI:SW,SI,30V,150MA,30V,DO-35	01295	1N4152R
A9A1CR551	152-0141-02			SEMICOND DVC,DI:SW,SI,30V,150MA,30V,DO-35	01295	1N4152R
A9A1CR640	152-0141-02			SEMICOND DVC,DI:SW,SI,30V,150MA,30V,DO-35	01295	1N4152R
A9A1CR641	152-0141-02			SEMICOND DVC,DI:SW,SI,30V,150MA,30V,DO-35	01295	1N4152R
A9A1CR720	152-0141-02			SEMICOND DVC,DI:SW,SI,30V,150MA,30V,DO-35	01295	1N4152R
A9A1CR730	152-0141-02			SEMICOND DVC,DI:SW,SI,30V,150MA,30V,DO-35	01295	1N4152R
A9A1CR740	152-0141-02			SEMICOND DVC,DI:SW,SI,30V,150MA,30V,DO-35	01295	1N4152R
A9A1CR741	152-0141-02			SEMICOND DVC,DI:SW,SI,30V,150MA,30V,DO-35	01295	1N4152R

Component No.	Tektronix Part No.	Serial/Model No. Eff	Dscont	Name & Description	Mfr Code	Mfr Part Number
A9A1CR820	152-0141-02			SEMICOND DVC,DI:SW,SI,30V,150MA,30V,DO-35	01295	1N4152R
A9A1CR821	152-0141-02			SEMICOND DVC,DI:SW,SI,30V,150MA,30V,DO-35	01295	1N4152R
A9A1CR830	152-0141-02			SEMICOND DVC,DI:SW,SI,30V,150MA,30V,DO-35	01295	1N4152R
A9A1CR831	152-0141-02			SEMICOND DVC,DI:SW,SI,30V,150MA,30V,DO-35	01295	1N4152R
A9A1CR920	152-0141-02			SEMICOND DVC,DI:SW,SI,30V,150MA,30V,DO-35	01295	1N4152R
A9A1CR921	152-0141-02			SEMICOND DVC,DI:SW,SI,30V,150MA,30V,DO-35	01295	1N4152R
A9A1CR930	152-0141-02			SEMICOND DVC,DI:SW,SI,30V,150MA,30V,DO-35	01295	1N4152R
A9A1CR931	152-0141-02			SEMICOND DVC,DI:SW,SI,30V,150MA,30V,DO-35	01295	1N4152R
A9A1CR940	152-0141-02			SEMICOND DVC,DI:SW,SI,30V,150MA,30V,DO-35	01295	1N4152R
A9A1CR941	152-0141-02			SEMICOND DVC,DI:SW,SI,30V,150MA,30V,DO-35	01295	1N4152R
A9A1Q140	151-0232-00			TRANSISTOR:SILICON,NPN,DUAL	07263	SP12141
A9A1Q220	151-0508-01			TRANSISTOR:UJT,ST,T0-68	80009	151-0508-01
A9A1Q230	151-0192-03			TRANSISTOR:SILICON,NPN	80009	151-0192-03
A9A1Q240	151-0192-03			TRANSISTOR:SILICON,NPN	80009	151-0192-03
A9A1Q420	151-0232-00			TRANSISTOR:SILICON,NPN,DUAL	07263	SP12141
A9A1Q421	151-0261-00			TRANSISTOR:SILICON,PNP,DUAL	04713	SD441
A9A1Q540	151-0302-01			TRANSISTOR:SILICON,NPN,SEL	80009	151-0302-01
A9A1Q740	151-0232-00			TRANSISTOR:SILICON,NPN,DUAL	07263	SP12141
A9A1Q820	151-0302-01			TRANSISTOR:SILICON,NPN,SEL	80009	151-0302-01
A9A1Q821	151-0192-03			TRANSISTOR:SILICON,NPN	80009	151-0192-03
A9A1Q823	151-0508-01			TRANSISTOR:UJT,ST,T0-68	80009	151-0508-01
A9A1R120	321-0280-00			RES.,FXD,FILM:8.06K OHM,1%,0.125W	91637	MFF1816G80600F
A9A1R121	321-0205-00			RES.,FXD,FILM:1.33K OHM,1%,0.125W	91637	MFF1816G13300F
A9A1R122	315-0684-00			RES.,FXD,CMPSN:680K OHM,5%,0.25W	01121	CB6845
A9A1R123	315-0103-00			RES.,FXD,CMPSN:10K OHM,5%,0.25W	01121	CB1035
A9A1R130	315-0101-00			RES.,FXD,CMPSN:100 OHM,5%,0.25W	01121	CB1015
A9A1R131	315-0474-00			RES.,FXD,CMPSN:470K OHM,5%,0.25W	01121	CB4745
A9A1R140	321-0348-00			RES.,FXD,FILM:41.2K OHM,1%,0.125W	91637	CMF55116G41201F
A9A1R141	321-0322-00			RES.,FXD,FILM:22.1K OHM,1%,0.125W	91637	MFF1816G22101F
A9A1R142	321-0322-00			RES.,FXD,FILM:22.1K OHM,1%,0.125W	91637	MFF1816G22101F
A9A1R143	315-0472-00			RES.,FXD,CMPSN:4.7K OHM,5%,0.25W	01121	CB4725
A9A1R144	315-0620-00			RES.,FXD,CMPSN:62 OHM,5%,0.25W	01121	CB6205
A9A1R145	311-1227-00			RES.,VAR,NONWIR:5K OHM,20%,0.50W	32997	3386F-T04-502
A9A1R150	315-0101-00			RES.,FXD,CMPSN:100 OHM,5%,0.25W	01121	CB1015
A9A1R151	315-0224-00			RES.,FXD,CMPSN:220K OHM,5%,0.25W	01121	CB2245
A9A1R152	315-0472-00			RES.,FXD,CMPSN:4.7K OHM,5%,0.25W	01121	CB4725
A9A1R153	315-0472-00			RES.,FXD,CMPSN:4.7K OHM,5%,0.25W	01121	CB4725
A9A1R210	308-0836-00			RES.,FXD,WW:1.2 OHM,5%,1W,FUSIBLE	75042	BW-20F-1.2 OHM
A9A1R211	308-0836-00			RES.,FXD,WW:1.2 OHM,5%,1W,FUSIBLE	75042	BW-20F-1.2 OHM
A9A1R220	315-0104-00			RES.,FXD,CMPSN:100K OHM,5%,0.25W	01121	CB1045
A9A1R221	315-0472-00			RES.,FXD,CMPSN:4.7K OHM,5%,0.25W	01121	CB4725
A9A1R222	315-0682-00			RES.,FXD,CMPSN:6.8K OHM,5%,0.25W	01121	CB6825
A9A1R223	315-0102-00			RES.,FXD,CMPSN:1K OHM,5%,0.25W	01121	CB1025
A9A1R230	321-0347-00			RES.,FXD,FILM:40.2K OHM,1%,0.125W	91637	MFF1816G40201F
A9A1R231	315-0512-00			RES.,FXD,CMPSN:5.1K OHM,5%,0.25W	01121	CB5125
A9A1R240	311-1227-00			RES.,VAR,NONWIR:5K OHM,20%,0.50W	32997	3386F-T04-502
A9A1R241	315-0621-00			RES.,FXD,CMPSN:620 OHM,5%,0.25W	01121	CB6215
A9A1R242	315-0682-00			RES.,FXD,CMPSN:6.8K OHM,5%,0.25W	01121	CB6825
A9A1R243	315-0224-00			RES.,FXD,CMPSN:220K OHM,5%,0.25W	01121	CB2245
A9A1R250	321-0242-00			RES.,FXD,FILM:3.24K OHM,1%,0.125W	91637	MFF1816G32400F
A9A1R251	321-0349-00			RES.,FXD,FILM:42.2K OHM,1%,0.125W	91637	MFF1816G42201F
A9A1R252	315-0472-00			RES.,FXD,CMPSN:4.7K OHM,5%,0.25W	01121	CB4725
A9A1R253	315-0472-00			RES.,FXD,CMPSN:4.7K OHM,5%,0.25W	01121	CB4725
A9A1R254	315-0104-00			RES.,FXD,CMPSN:100K OHM,5%,0.25W	01121	CB1045

Component No.	Tektronix Part No.	Serial/Model No. Eff	Dscont	Name & Description	Mfr Code	Mfr Part Number
A9A1R310	308-0836-00			RES.,FXD,WW:1.2 OHM,5%,1W,FUSIBLE	75042	BW-20F-1.2 OHM
A9A1R320	307-0103-00			RES.,FXD,CMPSN:2.7 OHM,5%,0.25W	01121	CB27G5
A9A1R321	315-0103-00			RES.,FXD,CMPSN:10K OHM,5%,0.25W	01121	CB1035
A9A1R322	315-0913-00			RES.,FXD,CMPSN:91K OHM,5%,0.25W	01121	CB9135
A9A1R323	321-0345-00			RES.,FXD,FILM:38.3K OHM,1%,0.125W	91637	CMF55116G38301F
A9A1R324	311-1231-00			RES.,VAR,NONWIR:25K OHM,20%,0.50W	32997	3386F-T04-253
A9A1R325	321-0322-00			RES.,FXD,FILM:22.1K OHM,1%,0.125W	91637	MFF1816G22101F
A9A1R330	315-0102-00			RES.,FXD,CMPSN:1K OHM,5%,0.25W	01121	CB1025
A9A1R340	321-0294-00			RES.,FXD,FILM:11.3K OHM,1%,0.125W	91637	CMF55116G11301F
A9A1R341	321-0268-00			RES.,FXD,FILM:6.04K OHM,1%,0.125W	91637	MFF1816G60400F
A9A1R350	321-0299-00			RES.,FXD,FILM:12.7K OHM,1%,0.125W	91637	MFF1816G12701F
A9A1R351	311-1238-00			RES.,VAR,NONWIR:5K OHM,10%,0.50W	73138	72-27-0
A9A1R352	321-0241-00			RES.,FXD,FILM:3.16K OHM,1%,0.125W	91637	MFF1816G31600F
A9A1R410	308-0836-00			RES.,FXD,WW:1.2 OHM,5%,1W,FUSIBLE	75042	BW-20F-1.2 OHM
A9A1R420	315-0103-00			RES.,FXD,CMPSN:10K OHM,5%,0.25W	01121	CB1035
A9A1R421	315-0620-00	B010100	B010134	RES.,FXD,CMPSN:62 OHM,5%,0.25W	01121	CB6205
A9A1R421	315-0821-00	B010135		RES.,FXD,CMPSN:820 OHM,5%,0.25W	01121	CB8215
A9A1R422	315-0512-00			RES.,FXD,CMPSN:5.1K OHM,5%,0.25W	01121	CB5125
A9A1R423	315-0620-00			RES.,FXD,CMPSN:62 OHM,5%,0.25W	01121	CB6205
A9A1R424	315-0513-00			RES.,FXD,CMPSN:51K OHM,5%,0.25W	01121	CB5135
A9A1R425	315-0101-00			RES.,FXD,CMPSN:100 OHM,5%,0.25W	01121	CB1015
A9A1R430	321-0386-00			RES.,FXD,FILM:102K OHM,1%,0.125W	91637	MFF1816G10202F
A9A1R431	321-0298-00			RES.,FXD,FILM:12.4K OHM,1%,0.125W	91637	MFF1816G12401F
A9A1R432	311-1228-00			RES.,VAR,NONWIR:10K OHM,20%,0.50W	32997	3386F-T04-103
A9A1R433	321-0253-00			RES.,FXD,FILM:4.22K OHM,1%,0.125W	91637	MFF1816G42200F
A9A1R440	321-0365-00			RES.,FXD,FILM:61.9K OHM,1%,0.125W	91637	MFF1816G61901F
A9A1R441	321-0365-00			RES.,FXD,FILM:61.9K OHM,1%,0.125W	91637	MFF1816G61901F
A9A1R442	321-0269-00			RES.,FXD,FILM:6.19K OHM,1%,0.125W	91637	MFF1816G61900F
A9A1R443	321-0269-00			RES.,FXD,FILM:6.19K OHM,1%,0.125W	91637	MFF1816G61900F
A9A1R444	321-0269-00			RES.,FXD,FILM:6.19K OHM,1%,0.125W	91637	MFF1816G61900F
A9A1R445	321-0268-00			RES.,FXD,FILM:6.04K OHM,1%,0.125W	91637	MFF1816G60400F
A9A1R446	321-0269-00			RES.,FXD,FILM:6.19K OHM,1%,0.125W	91637	MFF1816G61900F
A9A1R447	321-0268-00			RES.,FXD,FILM:6.04K OHM,1%,0.125W	91637	MFF1816G60400F
A9A1R450	321-0342-00			RES.,FXD,FILM:35.7K OHM,1%,0.125W	91637	MFF1816G35701F
A9A1R451	315-0101-00			RES.,FXD,CMPSN:100 OHM,5%,0.25W	01121	CB1015
A9A1R452	321-0269-00			RES.,FXD,FILM:6.19K OHM,1%,0.125W	91637	MFF1816G61900F
A9A1R453	321-0269-00			RES.,FXD,FILM:6.19K OHM,1%,0.125W	91637	MFF1816G61900F
A9A1R454	311-1238-00			RES.,VAR,NONWIR:5K OHM,10%,0.50W	73138	72-27-0
A9A1R455	321-0341-00			RES.,FXD,FILM:34.8K OHM,1%,0.125W	91637	CMF55116G34801F
A9A1R510	308-0836-00			RES.,FXD,WW:1.2 OHM,5%,1W,FUSIBLE	75042	BW-20F-1.2 OHM
A9A1R520	315-0512-00			RES.,FXD,CMPSN:5.1K OHM,5%,0.25W	01121	CB5125
A9A1R521	315-0101-00			RES.,FXD,CMPSN:100 OHM,5%,0.25W	01121	CB1015
A9A1R522	315-0101-00			RES.,FXD,CMPSN:100 OHM,5%,0.25W	01121	CB1015
A9A1R530	315-0101-00			RES.,FXD,CMPSN:100 OHM,5%,0.25W	01121	CB1015
A9A1R531	315-0162-00			RES.,FXD,CMPSN:1.6K OHM,5%,0.25W	01121	CB1625
A9A1R532	321-0254-00			RES.,FXD,FILM:4.32K OHM,1%,0.125W	91637	MFF1816G43200F
A9A1R533	321-0241-00			RES.,FXD,FILM:3.16K OHM,1%,0.125W	91637	MFF1816G31600F
A9A1R540	321-0344-00			RES.,FXD,FILM:37.4K OHM,1%,0.125W	91637	MFF1816G37401F
A9A1R541	321-0335-00			RES.,FXD,FILM:30.1K OHM,1%,0.125W	91637	CMF55116G30101F
A9A1R542	321-0294-00			RES.,FXD,FILM:11.3K OHM,1%,0.125W	91637	CMF55116G11301F
A9A1R543	321-0208-00			RES.,FXD,FILM:1.43K OHM,1%,0.125W	91637	MFF1816G14300F
A9A1R544	315-0620-00			RES.,FXD,CMPSN:62 OHM,5%,0.25W	01121	CB6205
A9A1R545	315-0913-00			RES.,FXD,CMPSN:91K OHM,5%,0.25W	01121	CB9135
A9A1R546	321-0345-00			RES.,FXD,FILM:38.3K OHM,1%,0.125W	91637	CMF55116G38301F

Component No.	Tektronix Part No.	Serial/Model No. Eff	Dscont	Name & Description	Mfr Code	Mfr Part Number
A9A1R550	321-0268-00			RES.,FXD,FILM:6.04K OHM,1%,0.125W	91637	MFF1816G60400F
A9A1R551	315-0101-00			RES.,FXD,CMPSN:100 OHM,5%,0.25W	01121	CB1015
A9A1R552	321-0327-00			RES.,FXD,FILM:24.9K OHM,1%,0.125W	91637	MFF1816G24901F
A9A1R553	321-0322-00			RES.,FXD,FILM:22.1K OHM,1%,0.125W	91637	MFF1816G22101F
A9A1R554	311-1246-00			RES.,VAR,NONWIR:50K OHM,10%,0.50W	02111	E4A503
A9A1R556	315-0103-00			RES.,FXD,CMPSN:10K OHM,5%,0.25W	01121	CB1035
A9A1R620	315-0472-00			RES.,FXD,CMPSN:4.7K OHM,5%,0.25W	01121	CB4725
A9A1R621	321-0216-00			RES.,FXD,FILM:1.74K OHM,1%,0.125W	91637	MFF1816G17400F
A9A1R622	321-0314-00			RES.,FXD,FILM:18.2K OHM,1%,0.125W	91637	MFF1816G18201F
A9A1R623	321-0280-00			RES.,FXD,FILM:8.06K OHM,1%,0.125W	91637	MFF1816G80600F
A9A1R624	315-0473-00			RES.,FXD,CMPSN:47K OHM,5%,0.25W	01121	CB4735
A9A1R630	315-0153-00			RES.,FXD,CMPSN:15K OHM,5%,0.25W	01121	CB1535
A9A1R631	321-0342-00			RES.,FXD,FILM:35.7K OHM,1%,0.125W	91637	MFF1816G35701F
A9A1R633	315-0101-00			RES.,FXD,CMPSN:100 OHM,5%,0.25W	01121	CB1015
A9A1R634	321-0251-00			RES.,FXD,FILM:4.02K OHM,1%,0.125W	91637	MFF1816G40200F
A9A1R635	315-0105-00			RES.,FXD,CMPSN:1M OHM,5%,0.25W	01121	CB1055
A9A1R636	321-0289-00			RES.,FXD,FILM:10K OHM,1%,0.125W	91637	MFF1816G10001F
A9A1R640	311-1231-00			RES.,VAR,NONWIR:25K OHM,20%,0.50W	32997	3386F-T04-253
A9A1R641	321-0298-00			RES.,FXD,FILM:12.4K OHM,1%,0.125W	91637	MFF1816G12401F
A9A1R642	321-0386-00			RES.,FXD,FILM:102K OHM,1%,0.125W	91637	MFF1816G10202F
A9A1R643	321-0254-00			RES.,FXD,FILM:4.32K OHM,1%,0.125W	91637	MFF1816G43200F
A9A1R644	321-0289-00			RES.,FXD,FILM:10K OHM,1%,0.125W	91637	MFF1816G10001F
A9A1R650	315-0332-00			RES.,FXD,CMPSN:3.3K OHM,5%,0.25W	01121	CB3325
A9A1R651	311-1245-00			RES.,VAR,NONWIR:10K OHM,10%,0.50W	73138	72-28-0
A9A1R652	311-1240-00			RES.,VAR,NONWIR:25K OHM,10%,0.50W	73138	72-30-0
A9A1R720	315-0103-00			RES.,FXD,CMPSN:10K OHM,5%,0.25W	01121	CB1035
A9A1R721	307-0105-00			RES.,FXD,CMPSN:3.9 OHM,5%,0.25W	01121	CB39G5
A9A1R722	321-0344-00			RES.,FXD,FILM:37.4K OHM,1%,0.125W	91637	MFF1816G37401F
A9A1R730	315-0752-00			RES.,FXD,CMPSN:7.5K OHM,5%,0.25W	01121	CB7525
A9A1R740	321-0223-00			RES.,FXD,FILM:2.05K OHM,1%,0.125W	91637	MFF1816G20500F
A9A1R741	321-0289-00			RES.,FXD,FILM:10K OHM,1%,0.125W	91637	MFF1816G10001F
A9A1R742	321-0338-00			RES.,FXD,FILM:32.4K OHM,1%,0.125W	91637	MFF1816G32401F
A9A1R743	321-0385-00			RES.,FXD,FILM:100K OHM,1%,0.125W	91637	MFF1816G10002F
A9A1R744	315-0332-00			RES.,FXD,CMPSN:3.3K OHM,5%,0.25W	01121	CB3325
A9A1R745	315-0821-00			RES.,FXD,CMPSN:820 OHM,5%,0.25W	01121	CB8215
A9A1R746	315-0752-00			RES.,FXD,CMPSN:7.5K OHM,5%,0.25W	01121	CB7525
A9A1R747	315-0274-00			RES.,FXD,CMPSN:270K OHM,5%,0.25W	01121	CB2745
A9A1R748	315-0620-00			RES.,FXD,CMPSN:62 OHM,5%,0.25W	01121	CB6205
A9A1R750	321-0338-00			RES.,FXD,FILM:32.4K OHM,1%,0.125W	91637	MFF1816G32401F
A9A1R751	321-0356-00			RES.,FXD,FILM:49.9K OHM,1%,0.125W	91637	MFF1816G49901F
A9A1R752	321-0289-00			RES.,FXD,FILM:10K OHM,1%,0.125W	91637	MFF1816G10001F
A9A1R753	321-0275-00			RES.,FXD,FILM:7.15K OHM,1%,0.125W	91637	MFF1816G71500F
A9A1R754	315-0101-00			RES.,FXD,CMPSN:100 OHM,5%,0.25W	01121	CB1015
A9A1R755	311-1239-00			RES.,VAR,NONWIR:2.5K OHM,10%,0.50W	73138	72-26-0
A9A1R820	315-0434-00			RES.,FXD,CMPSN:430K OHM,5%,0.25W	01121	CB4345
A9A1R821	315-0753-00			RES.,FXD,CMPSN:75K OHM,5%,0.25W	01121	CB7535
A9A1R823	315-0103-00			RES.,FXD,CMPSN:10K OHM,5%,0.25W	01121	CB1035
A9A1R824	315-0102-00			RES.,FXD,CMPSN:1K OHM,5%,0.25W	01121	CB1025
A9A1R825	315-0101-00			RES.,FXD,CMPSN:100 OHM,5%,0.25W	01121	CB1015
A9A1R826	315-0472-00			RES.,FXD,CMPSN:4.7K OHM,5%,0.25W	01121	CB4725
A9A1R827	315-0102-00			RES.,FXD,CMPSN:1K OHM,5%,0.25W	01121	CB1025
A9A1R830	315-0271-00			RES.,FXD,CMPSN:270 OHM,5%,0.25W	01121	CB2715
A9A1R831	321-0395-00			RES.,FXD,FILM:127K OHM,1%,0.125W	91637	MFF1816G12702F
A9A1R832	315-0163-00			RES.,FXD,CMPSN:16K OHM,5%,0.25W	01121	CB1635

Component No.	Tektronix Part No.	Serial/Model No. Eff	Dscont	Name & Description	Mfr Code	Mfr Part Number
A9A1R833	315-0113-00			RES.,FXD,CMPSN:11K OHM,5%,0.25W	01121	CB1135
A9A1R834	315-0113-00			RES.,FXD,CMPSN:11K OHM,5%,0.25W	01121	CB1135
A9A1R835	315-0153-00			RES.,FXD,CMPSN:15K OHM,5%,0.25W	01121	CB1535
A9A1R836	315-0101-00			RES.,FXD,CMPSN:100 OHM,5%,0.25W	01121	CB1015
A9A1R837	315-0472-00			RES.,FXD,CMPSN:4.7K OHM,5%,0.25W	01121	CB4725
A9A1R840	315-0102-00			RES.,FXD,CMPSN:1K OHM,5%,0.25W	01121	CB1025
A9A1R841	315-0152-00			RES.,FXD,CMPSN:1.5K OHM,5%,0.25W	01121	CB1525
A9A1R842	315-0133-00			RES.,FXD,CMPSN:13K OHM,5%,0.25W	01121	CB1335
A9A1R843	315-0103-00			RES.,FXD,CMPSN:10K OHM,5%,0.25W	01121	CB1035
A9A1R850	321-0275-00			RES.,FXD,FILM:7.15K OHM,1%,0.125W	91637	MFF1816G71500F
A9A1R851	315-0272-00			RES.,FXD,CMPSN:2.7K OHM,5%,0.25W	01121	CB2725
A9A1R852	321-0285-00			RES.,FXD,FILM:9.09K OHM,1%,0.125W	91637	MFF1816G90900F
A9A1R853	321-0302-00			RES.,FXD,FILM:13.7K OHM,1%,0.125W	91637	MFF1816G13701F
A9A1R853	----- -----			(ENDED USAGE 670-6353-00 ONLY)		
A9A1R853	321-0347-00			RES.,FXD,FILM:40.2K OHM,1%,0.125W	91637	MFF1816G40201F
A9A1C853	----- -----			(BEGAN USAGE 670-6353-03 ONLY)		
A9A1R854	321-0306-00			RES.,FXD,FILM:15K OHM,1%,0.125W	91637	MFF1816G15001F
A9A1R855	311-1239-00			RES.,VAR,NONWIR:2.5K OHM,10%,0.50W	73138	72-26-0
A9A1R920	315-0122-00			RES.,FXD,CMPSN:1.2K OHM,5%,0.25W	01121	CB1225
A9A1R921	315-0101-00			RES.,FXD,CMPSN:100 OHM,5%,0.25W	01121	CB1015
A9A1R930	315-0122-00			RES.,FXD,CMPSN:1.2K OHM,5%,0.25W	01121	CB1225
A9A1R931	315-0101-00			RES.,FXD,CMPSN:100 OHM,5%,0.25W	01121	CB1015
A9A1R932	315-0133-00			RES.,FXD,CMPSN:13K OHM,5%,0.25W	01121	CB1335
A9A1R933	315-0103-00			RES.,FXD,CMPSN:10K OHM,5%,0.25W	01121	CB1035
A9A1R934	315-0270-00			RES.,FXD,CMPSN:27 OHM,5%,0.25W	01121	CB2705
A9A1R934	----- -----			(ENDED USAGE 670-6353-00 ONLY)		
A9A1R934	315-0300-02			RES.,FXD,CMPSN:30 OHM,5%,0.25W	01121	CB3005
A9A1R934	----- -----			(BEGAN USAGE 670-6353-03 ONLY)		
A9A1R940	315-0302-00			RES.,FXD,CMPSN:3K OHM,5%,0.25W	01121	CB3025
A9A1R941	315-0102-00			RES.,FXD,CMPSN:1K OHM,5%,0.25W	01121	CB1025
A9A1R950	321-0260-00			RES.,FXD,FILM:4.99K OHM,1%,0.125W	91637	MFF1816G49900F
A9A1U110	156-0872-01			MICROCIRCUIT,LI:VOLTAGE REGULATOR	04713	MC7912CTD
A9A1U130	156-0742-02			MICROCIRCUIT,LI:OPERATIONAL AMPLIFIER,SEL	01295	LM318JG
A9A1U150	156-0067-13			MICROCIRCUIT,LI:OPNL AMPL,SELECTED	01295	UA741CJG4
A9A1U230	156-0742-02			MICROCIRCUIT,LI:OPERATIONAL AMPLIFIER,SEL	01295	LM318JG
A9A1U240	156-0742-02			MICROCIRCUIT,LI:OPERATIONAL AMPLIFIER,SEL	01295	LM318JG
A9A1U310	156-0285-01			MICROCIRCUIT,LI:VOLTAGE REGULATOR,CHK	04713	MC7812CTD
A9A1U330	155-0152-01			MICROCIRCUIT,LI:GEOMETRY & FOCUS CORRECT	80009	155-0152-01
A9A1U350	156-0407-02			MICROCIRCUIT,LI:4-QUAD MULTI,SCREENED	04713	MC1495LDS
A9A1U410	156-0277-01			MICROCIRCUIT,LI:POSITIVE VOLTAGE REG	04713	MC7805CTD
A9A1U440	156-0407-02			MICROCIRCUIT,LI:4-QUAD MULTI,SCREENED	04713	MC1495LDS
A9A1U540	156-1149-01			MICROCIRCUIT,LI:OPER AMPL,JFET,BURN-IN	27014	GLEA134/A+
A9A1U620	156-0067-13			MICROCIRCUIT,LI:OPNL AMPL,SELECTED	01295	UA741CJG4
A9A1U640	155-0152-01			MICROCIRCUIT,LI:GEOMETRY & FOCUS CORRECT	80009	155-0152-01
A9A1U720	156-0158-03			MICROCIRCUIT,LI:DUAL OPNL AMPL,CHK	80009	156-0158-03
A9A1U730	156-1312-00			MICROCIRCUIT,LI:SAMPLE/HOLD AMPLIFIER	80009	156-1312-00
A9A1U740	156-0158-03			MICROCIRCUIT,LI:DUAL OPNL AMPL,CHK	80009	156-0158-03
A9A1U850	156-0405-03			MICROCIRCUIT,DI:DUAL RETRIG MONOSTABLE MV	07263	9602
A9A1U920	156-0274-01			MICROCIRCUIT,DI:DUAL DIFF LINERCVR,SCRN	07263	9615
A9A1U930	156-0721-02			MICROCIRCUIT,DI:QUAD 2-IN NAND SCHMITT TRI	04713	SN74LS132NDS
A9A1U950	156-0706-02			MICROCIRCUIT,DI:DUAL MONOSTABLE MV W/SCHMIT	01295	SN74221 (NP3 OR
A9A1VR330	152-0395-00			SEMICOND DEVICE:ZENER,0.4W,4.3V,5%	14552	TD332317

Component No.	Tektronix Part No.	Serial/Model No. Eff	Dscont	Name & Description	Mfr Code	Mfr Part Number
A10A1	670-6351-00	B010100	B010151	CKT BOARD ASSY:VERTICAL DEFLECTION	80009	670-6351-00
A10A1	670-6351-01	B010152		CKT BOARD ASSY:VERTICAL DEFLECTION	80009	670-6351-01
A10A1C110	290-0117-00			CAP.,FXD,ELCTLT:50UF,+75-10%,50V	56289	30D506G050DD9
A10A1C111	290-0117-00			CAP.,FXD,ELCTLT:50UF,+75-10%,50V	56289	30D506G050DD9
A10A1C112	281-0775-00			CAP.,FXD,CER DI:0.1UF,20%,50V	04222	MA205E104MAA
A10A1C150	290-0260-00			CAP.,FXD,ELCTLT:50UF,+75-10%,200V	56289	34D506G200GL4
A10A1C214	290-0770-00			CAP.,FXD,ELCTLT:100UF,+50-10%,25V	56289	502D230
A10A1C215	283-0088-00			CAP.,FXD,CER DI:1100PF,5%,500V	59660	801-547B112J
A10A1C221	283-0341-00			CAP.,FXD,CER DI:0.047UF,10%,100V	72982	8121N153X7R0473K
A10A1C222	283-0212-00			CAP.,FXD,CER DI:2UF,20%,50V	51642	400-050-Z5U205M
A10A1C233	290-0778-00			CAP.,FXD,ELCTLT:1UF,+50-10%,50V	54473	ECE-A50N1
A10A1C315	283-0114-00			CAP.,FXD,CER DI:0.0015UF,5%,200V	59660	805534Y5DO152J
A10A1C321	290-0770-00			CAP.,FXD,ELCTLT:100UF,+50-10%,25V	56289	502D230
A10A1C323	283-0057-00			CAP.,FXD,CER DI:0.1UF,+80-20%,200V	56289	2C20Z5U104Z200B
A10A1C340	283-0088-00			CAP.,FXD,CER DI:1100PF,5%,500V	59660	801-547B112J
A10A1C353	290-0770-00			CAP.,FXD,ELCTLT:100UF,+50-10%,25V	56289	502D230
A10A1C411	290-0782-00			CAP.,FXD,ELCTLT:4.7UF,+75-10%,35V	55680	ULA1V4R7TEA
A10A1C430	290-0770-00			CAP.,FXD,ELCTLT:100UF,+50-10%,25V	56289	502D230
A10A1C454	290-0290-00			CAP.,FXD,ELCTLT:10UF,20%,25V	56289	30D472
A10A1C510	281-0775-00			CAP.,FXD,CER DI:0.1UF,20%,50V	04222	MA205E104MAA
A10A1C511	283-0212-00			CAP.,FXD,CER DI:2UF,20%,50V	51642	400-050-Z5U205M
A10A1C515	290-0290-00			CAP.,FXD,ELCTLT:10UF,20%,25V	56289	30D472
A10A1C622	290-0290-00			CAP.,FXD,ELCTLT:10UF,20%,25V	56289	30D472
A10A1C638	290-0804-00			CAP.,FXD,ELCTLT:10UF,+50-10%,25V	55680	ULA1E100TEA
A10A1C642	281-0775-00			CAP.,FXD,CER DI:0.1UF,20%,50V	04222	MA205E104MAA
A10A1C645	290-0290-00			CAP.,FXD,ELCTLT:10UF,20%,25V	56289	30D472
A10A1C652	290-0797-00			CAP.,FXD,ELCTLT:470UF,+50%-10%,50V	56289	D73403
A10A1C653	290-0745-00			CAP.,FXD,ELCTLT:22UF,+50-10%,25V	54473	ECE-A25V22L
A10A1C722	283-0615-00	B010100	B010151	CAP.,FXD,MICA D:33PF,5%,500V	00853	D155E330J0
A10A1C726	283-0615-00			CAP.,FXD,MICA D:33PF,5%,500V	00853	D155E330J0
A10A1C732	290-0745-00			CAP.,FXD,ELCTLT:22UF,+50-10%,25V	54473	ECE-A25V22L
A10A1C745	283-0615-00			CAP.,FXD,MICA D:33PF,5%,500V	00853	D155E330J0
A10A1C746	283-0615-00	B010100	B010151	CAP.,FXD,MICA D:33PF,5%,500V	00853	D155E330J0
A10A1C756	281-0775-00			CAP.,FXD,CER DI:0.1UF,20%,50V	04222	MA205E104MAA
A10A1C814	290-0778-00			CAP.,FXD,ELCTLT:1UF,+50-10%,50V	54473	ECE-A50N1
A10A1C824	290-0770-00			CAP.,FXD,ELCTLT:100UF,+50-10%,25V	56289	502D230
A10A1C825	290-0778-00	B010100	B010151	CAP.,FXD,ELCTLT:1UF,+50-10%,50V	54473	ECE-A50N1
A10A1C825	290-0290-00	B010152		CAP.,FXD,ELCTLT:10UF,20%,25V	56289	30D472
A10A1C830	283-0003-00	B010100	B010151	CAP.,FXD,CER DI:0.01UF,+80-20%,150V	59821	2DDH66J103Z
A10A1C833	283-0003-00	B010100	B010151	CAP.,FXD,CER DI:0.01UF,+80-20%,150V	59821	2DDH66J103Z
A10A1C850	290-0778-00			CAP.,FXD,ELCTLT:1UF,+50-10%,50V	54473	ECE-A50N1
A10A1C851	290-0770-00			CAP.,FXD,ELCTLT:100UF,+50-10%,25V	56289	502D230
A10A1CR120	152-0141-02			SEMICOND DVC,DI:SW,SI,30V,150MA,30V,DO-35	01295	1N4152R
A10A1CR121	152-0141-02			SEMICOND DVC,DI:SW,SI,30V,150MA,30V,DO-35	01295	1N4152R
A10A1CR235	152-0141-02			SEMICOND DVC,DI:SW,SI,30V,150MA,30V,DO-35	01295	1N4152R
A10A1CR236	152-0242-00			SEMICOND DVC:SIG,SI,225V,0.2A,D0-7	07263	FDH5004
A10A1CR312	152-0141-02			SEMICOND DVC,DI:SW,SI,30V,150MA,30V,DO-35	01295	1N4152R
A10A1CR332	152-0242-00			SEMICOND DVC:SIG,SI,225V,0.2A,D0-7	07263	FDH5004
A10A1CR345	152-0141-02			SEMICOND DVC,DI:SW,SI,30V,150MA,30V,DO-35	01295	1N4152R
A10A1CR346	152-0141-02			SEMICOND DVC,DI:SW,SI,30V,150MA,30V,DO-35	01295	1N4152R
A10A1CR347	152-0141-02			SEMICOND DVC,DI:SW,SI,30V,150MA,30V,DO-35	01295	1N4152R
A10A1CR351	152-0066-00			SEMICOND DVC DI:RECT,SI,400V,1A,D0-41	05828	GP10G-020
A10A1CR412	152-0141-02			SEMICOND DVC,DI:SW,SI,30V,150MA,30V,DO-35	01295	1N4152R
A10A1CR632	152-0141-02			SEMICOND DVC,DI:SW,SI,30V,150MA,30V,DO-35	01295	1N4152R

Component No.	Tektronix Part No.	Serial/Model No. Eff	Dscont	Name & Description	Mfr Code	Mfr Part Number
A10A1CR723	152-0141-02			SEMICOND DVC,DI:SW,SI,30V,150MA,30V,DO-35	01295	1N4152R
A10A1CR724	152-0141-02			SEMICOND DVC,DI:SW,SI,30V,150MA,30V,DO-35	01295	1N4152R
A10A1CR735	152-0066-00			SEMICOND DVC DI:RECT,SI,400V,1A,D0-41	05828	GP10G-020
A10A1CR737	152-0066-00			SEMICOND DVC DI:RECT,SI,400V,1A,D0-41	05828	GP10G-020
A10A1CR739	152-0066-00			SEMICOND DVC DI:RECT,SI,400V,1A,D0-41	05828	GP10G-020
A10A1CR740	152-0141-02			SEMICOND DVC,DI:SW,SI,30V,150MA,30V,DO-35	01295	1N4152R
A10A1CR741	152-0141-02			SEMICOND DVC,DI:SW,SI,30V,150MA,30V,DO-35	01295	1N4152R
A10A1CR832	152-0066-00			SEMICOND DVC DI:RECT,SI,400V,1A,D0-41	05828	GP10G-020
A10A1L335	108-0336-00			COIL,RF:100UH	80009	108-0336-00
A10A1L450	108-0336-00			COIL,RF:100UH	80009	108-0336-00
A10A1L521	108-1021-00			COIL,RF:FIXED,5.1MH	80009	108-1021-00
A10A1L553	108-0336-00			COIL,RF:100UH	80009	108-0336-00
A10A1Q130	151-0358-01			TRANSISTOR:SILICON,NPN,SCREENED	80009	151-0358-01
A10A1Q223	151-0358-01			TRANSISTOR:SILICON,NPN,SCREENED	80009	151-0358-01
A10A1Q232	151-0280-01			TRANSISTOR:SILICON,PNP,SEL	04713	ST1390H
A10A1Q236	151-0444-03			TRANSISTOR:SILICON,NPN	80009	151-0444-03
A10A1Q243	151-0358-01			TRANSISTOR:SILICON,NPN,SCREENED	80009	151-0358-01
A10A1Q312	151-0406-01			TRANSISTOR:SILICON,PNP,SCREENED	80009	151-0406-01
A10A1Q324	151-0150-03			TRANSISTOR:SCREENED,2N3440	04713	ST1366H
A10A1Q334	151-0444-03			TRANSISTOR:SILICON,NPN	80009	151-0444-03
A10A1Q343	151-0150-03			TRANSISTOR:SCREENED,2N3440	04713	ST1366H
A10A1Q420	151-0301-02			TRANSISTOR:SILICON,PNP	04713	2N2907A
A10A1Q633	151-0216-02			TRANSISTOR:PNP,SI PRESTRESSED & TESTED	80009	151-0216-02
A10A1Q637	151-0216-02			TRANSISTOR:PNP,SI PRESTRESSED & TESTED	80009	151-0216-02
A10A1Q639	151-0216-02			TRANSISTOR:PNP,SI PRESTRESSED & TESTED	80009	151-0216-02
A10A1Q727	151-0701-01			TRANSISTOR:25C2527G,SCREENED	000IG	23C2527-G-TEK2
A10A1Q730	151-0192-03			TRANSISTOR:SILICON,NPN	80009	151-0192-03
A10A1Q731	151-0192-03			TRANSISTOR:SILICON,NPN	80009	151-0192-03
A10A1Q747	151-0701-01			TRANSISTOR:25C2527G,SCREENED	000IG	23C2527-G-TEK2
A10A1R113	321-0389-00			RES.,FXD,FILM:110K OHM,1%,0.125W	91637	MFF1816G11002F
A10A1R122	315-0103-00			RES.,FXD,CMPSN:10K OHM,5%,0.25W	01121	CB1035
A10A1R140	303-0510-00			RES.,FXD,CMPSN:51 OHM,5%,1W	01121	GB5105
A10A1R141	305-0183-00			RES.,FXD,CMPSN:18K OHM,5%,2W	01121	HB1835
A10A1R211	321-0211-00			RES.,FXD,FILM:1.54K OHM,1%,0.125W	91637	MFF1816G15400F
A10A1R212	315-0103-00			RES.,FXD,CMPSN:10K OHM,5%,0.25W	01121	CB1035
A10A1R213	315-0332-00			RES.,FXD,CMPSN:3.3K OHM,5%,0.25W	01121	CB3325
A10A1R220	315-0221-00			RES.,FXD,CMPSN:220 OHM,5%,0.25W	01121	CB2215
A10A1R230	315-0101-00			RES.,FXD,CMPSN:100 OHM,5%,0.25W	01121	CB1015
A10A1R231	315-0471-00			RES.,FXD,CMPSN:470 OHM,5%,0.25W	01121	CB4715
A10A1R234	315-0133-00			RES.,FXD,CMPSN:13K OHM,5%,0.25W	01121	CB1335
A10A1R240	315-0102-00			RES.,FXD,CMPSN:1K OHM,5%,0.25W	01121	CB1025
A10A1R241	315-0393-00			RES.,FXD,CMPSN:39K OHM,5%,0.25W	01121	CB3935
A10A1R311	308-0799-00			RES.,FXD,WW:1 OHM,1%,4W	91637	NS21R000F
A10A1R312	315-0152-00			RES.,FXD,CMPSN:1.5K OHM,5%,0.25W	01121	CB1525
A10A1R314	321-0193-00			RES.,FXD,FILM:1K OHM,1%,0.125W	01121	ORD BY DESCR
A10A1R317	315-0561-00			RES.,FXD,CMPSN:560 OHM,5%,0.25W	01121	CB5615
A10A1R320	315-0121-00			RES.,FXD,CMPSN:120 OHM,5%,0.25W	01121	CB1215
A10A1R322	315-0100-00			RES.,FXD,CMPSN:10 OHM,5%,0.25W	01121	CB1005
A10A1R332	308-0836-00			RES.,FXD,WW:1.2 OHM,5%,1W,FUSIBLE	75042	BW-20F-1.2 OHM
A10A1R333	315-0623-00			RES.,FXD,CMPSN:62K OHM,5%,0.25W	01121	CB6235
A10A1R335	315-0471-00			RES.,FXD,CMPSN:470 OHM,5%,0.25W	01121	CB4715
A10A1R336	308-0836-00			RES.,FXD,WW:1.2 OHM,5%,1W,FUSIBLE	75042	BW-20F-1.2 OHM
A10A1R341	315-0471-00			RES.,FXD,CMPSN:470 OHM,5%,0.25W	01121	CB4715
A10A1R342	308-0441-00			RES.,FXD,WW:3 OHM,5%,3W	91637	CW2B-3R00J

Component No.	Tektronix Part No.	Serial/Model No. Eff	Dscont	Name & Description	Mfr Code	Mfr Part Number
A10A1R344	315-0202-00			RES.,FXD,CMPSN:2K OHM,5%,0.25W	01121	CB2025
A10A1R350	315-0100-00			RES.,FXD,CMPSN:10 OHM,5%,0.25W	01121	CB1005
A10A1R352	315-0563-00			RES.,FXD,CMPSN:56K OHM,5%,0.25W	01121	CB5635
A10A1R353	315-0152-00			RES.,FXD,CMPSN:1.5K OHM,5%,0.25W	01121	CB1525
A10A1R354	308-0836-00			RES.,FXD,WW:1.2 OHM,5%,1W,FUSIBLE	75042	BW-20F-1.2 OHM
A10A1R413	315-0113-00			RES.,FXD,CMPSN:11K OHM,5%,0.25W	01121	CB1135
A10A1R414	321-0193-00			RES.,FXD,FILM:1K OHM,1%,0.125W	01121	ORD BY DESCR
A10A1R415	315-0103-00			RES.,FXD,CMPSN:10K OHM,5%,0.25W	01121	CB1035
A10A1R421	315-0222-00			RES.,FXD,CMPSN:2.2K OHM,5%,0.25W	01121	CB2225
A10A1R422	301-0751-00			RES.,FXD,CMPSN:750 OHM,5%,0.50W	01121	EB7515
A10A1R423	321-0376-00			RES.,FXD,FILM:80.6K OHM,1%,0.125W	91637	MFF1816G80601F
A10A1R424	315-0103-00			RES.,FXD,CMPSN:10K OHM,5%,0.25W	01121	CB1035
A10A1R431	301-0751-00			RES.,FXD,CMPSN:750 OHM,5%,0.50W	01121	EB7515
A10A1R512	321-0255-00			RES.,FXD,FILM:4.42K OHM,1%,0.125W	91637	MFF1816G44200F
A10A1R513	321-0289-00			RES.,FXD,FILM:10K OHM,1%,0.125W	91637	MFF1816G10001F
A10A1R514	321-0204-00			RES.,FXD,FILM:1.3K OHM,1%,0.125W	91637	MFF1816G13000F
A10A1R534	303-0821-00			RES.,FXD,CMPSN:820 OHM,5%,1W	01121	GB8215
A10A1R544	308-0836-00			RES.,FXD,WW:1.2 OHM,5%,1W,FUSIBLE	75042	BW-20F-1.2 OHM
A10A1R550	321-0260-00			RES.,FXD,FILM:4.99K OHM,1%,0.125W	91637	MFF1816G49900F
A10A1R551	311-1238-00			RES.,VAR,NONWIR:5K OHM,10%,0.50W	73138	72-27-0
A10A1R552	321-0260-00			RES.,FXD,FILM:4.99K OHM,1%,0.125W	91637	MFF1816G49900F
A10A1R553	311-1238-00			RES.,VAR,NONWIR:5K OHM,10%,0.50W	73138	72-27-0
A10A1R621	321-1210-01			RES.,FXD,FILM:1.52K OHM,0.5%,0.125W	91637	MFF1816G15200D
A10A1R630	321-0196-00			RES.,FXD,FILM:1.07K OHM,1%,0.125W	91637	MFF1816G10700F
A10A1R631	321-0097-00			RES.,FXD,FILM:100 OHM,1%,0.125W	91637	MFF1816G100R0F
A10A1R633	308-0836-00			RES.,FXD,WW:1.2 OHM,5%,1W,FUSIBLE	75042	BW-20F-1.2 OHM
A10A1R634	321-0245-00			RES.,FXD,FILM:3.48K OHM,1%,0.125W	91637	MFF1816G34800F
A10A1R635	321-0816-03			RES.,FXD,FILM:5K OHM,0.25%,0.125W	91637	MFF1816D50000C
A10A1R636	321-0816-03			RES.,FXD,FILM:5K OHM,0.25%,0.125W	91637	MFF1816D50000C
A10A1R640	311-0635-00			RES.,VAR,NONWW:TRMR,1K OHM,10%,0.5%,0.5W	02111	65Y102T010
A10A1R641	308-0836-00			RES.,FXD,WW:1.2 OHM,5%,1W,FUSIBLE	75042	BW-20F-1.2 OHM
A10A1R643	307-0107-00			RES.,FXD,CMPSN:5.6 OHM,5%,0.25W	01121	CB56G5
A10A1R644	321-1210-01			RES.,FXD,FILM:1.52K OHM,0.5%,0.125W	91637	MFF1816G15200D
A10A1R720	321-0816-03			RES.,FXD,FILM:5K OHM,0.25%,0.125W	91637	MFF1816D50000C
A10A1R721	321-0816-03			RES.,FXD,FILM:5K OHM,0.25%,0.125W	91637	MFF1816D50000C
A10A1R725	321-0193-00			RES.,FXD,FILM:1K OHM,1%,0.125W	01121	ORD BY DESCR
A10A1R733	315-0471-00			RES.,FXD,CMPSN:470 OHM,5%,0.25W	01121	CB4715
A10A1R734	315-0470-00			RES.,FXD,CMPSN:47 OHM,5%,0.25W	01121	CB4705
A10A1R736	315-0471-00			RES.,FXD,CMPSN:470 OHM,5%,0.25W	01121	CB4715
A10A1R737	315-0470-00			RES.,FXD,CMPSN:47 OHM,5%,0.25W	01121	CB4705
A10A1R742	321-0193-00			RES.,FXD,FILM:1K OHM,1%,0.125W	01121	ORD BY DESCR
A10A1R743	321-0816-03			RES.,FXD,FILM:5K OHM,0.25%,0.125W	91637	MFF1816D50000C
A10A1R744	321-0816-03			RES.,FXD,FILM:5K OHM,0.25%,0.125W	91637	MFF1816D50000C
A10A1R820	308-0799-00			RES.,FXD,WW:1 OHM,1%,4W	91637	NS21R000F
A10A1R821	315-0102-00			RES.,FXD,CMPSN:1K OHM,5%,0.25W	01121	CB1025
A10A1R822	308-0836-00			RES.,FXD,WW:1.2 OHM,5%,1W,FUSIBLE	75042	BW-20F-1.2 OHM
A10A1R823	307-0107-00			RES.,FXD,CMPSN:5.6 OHM,5%,0.25W	01121	CB56G5
A10A1R831	308-0836-00	B010100	B010151	RES.,FXD,WW:1.2 OHM,5%,1W,FUSIBLE	75042	BW-20F-1.2 OHM
A10A1R840	308-0799-00	B010100	B010151	RES.,FXD,WW:1 OHM,1%,4W	91637	NS21R000F
A10A1R841	308-0836-00			RES.,FXD,WW:1.2 OHM,5%,1W,FUSIBLE	75042	BW-20F-1.2 OHM
A10A1T540	120-1321-00			TRANSFORMER,RF:PINCUSHION	80009	120-1321-00
A10A1U210	156-0067-13			MICROCIRCUIT,LI:OPNL AMPL,SELECTED	01295	UA741CJG4
A10A1U416	156-0067-13			MICROCIRCUIT,LI:OPNL AMPL,SELECTED	01295	UA741CJG4
A10A1U834	156-0872-00			MICROCIRCUIT,LI:VOLTAGE REGULATOR	04713	MC7912C
A10A1U842	156-0285-00			MICROCIRCUIT,LI:VOLTAGE REGULATOR	27014	LM340T-12

Component No.	Tektronix Part No.	Serial/Model No. Eff	Dscont	Name & Description	Mfr Code	Mfr Part Number
A11A1	670-6350-00	B010100	B010159	CKT BOARD ASSY:HORIZONTAL DEFLECTION	80009	670-6350-00
A11A1	670-6350-01	B010160		CKT BOARD ASSY:HORIZONTAL DEFLECTION	80009	670-6350-01
A11A1C121	290-0818-00			CAP.,FXD,ELCTLT:390UF,+100-10%,40V	56289	672D397H040DS5C
A11A1C123	290-0770-00			CAP.,FXD,ELCTLT:100UF,+50-10%,25V	56289	502D230
A11A1C124	290-0290-00			CAP.,FXD,ELCTLT:10UF,20%,25V	56289	30D472
A11A1C131	290-0770-00			CAP.,FXD,ELCTLT:100UF,+50-10%,25V	56289	502D230
A11A1C132	283-0673-00	B010100	B010159	CAP.,FXD,MICA D:455PF,1%,500V	00853	D155F4550F0
A11A1C132	----- -----			(USED WITH 670-6350-00 ONLY)		
A11A1C133	283-0648-00	B010100	B010159	CAP.,FXD,MICA D:10PF,5%,100V	00853	D151C100D0
A11A1C133	----- -----			(USED WITH 670-6350-00 ONLY)		
A11A1C134	283-0067-00	B010100	B010159	CAP.,FXD,CER DI:0.001UF,10%,200V	59660	835-515-Z5D0102K
A11A1C134	----- -----			(USED WITH 670-6350-00 ONLY)		
A11A1C135	283-0067-00	B010100	B010159	CAP.,FXD,CER DI:0.001UF,10%,200V	59660	835-515-Z5D0102K
A11A1C135	----- -----			(USED WITH 670-6350-00 ONLY)		
A11A1C136	290-0770-00			CAP.,FXD,ELCTLT:100UF,+50-10%,25V	56289	502D230
A11A1C141	283-0028-00			CAP.,FXD,CER DI:0.0022UF,20%,50V	59660	0805585Y5SO222M
A11A1C142	290-0782-00			CAP.,FXD,ELCTLT:4.7UF,+75-10%,35V	55680	ULA1V4R7TEA
A11A1C143	283-0010-00			CAP.,FXD,CER DI:0.05UF,+100-20%,50V	56289	1C10Z5U503Z050B
A11A1C144	290-0782-00			CAP.,FXD,ELCTLT:4.7UF,+75-10%,35V	55680	ULA1V4R7TEA
A11A1C145	283-0010-00			CAP.,FXD,CER DI:0.05UF,+100-20%,50V	56289	1C10Z5U503Z050B
A11A1C146	281-0534-00			CAP.,FXD,CER DI:3.3PF,+/-0.25PF,500V	04222	7001-COJ-3R3C
A11A1C147	290-0746-00			CAP.,FXD,ELCTLT:47UF,+50-10%,16V	55680	ULA1C470TEA
A11A1C148	290-0746-00			CAP.,FXD,ELCTLT:47UF,+50-10%,16V	55680	ULA1C470TEA
A11A1C221	281-0775-00			CAP.,FXD,CER DI:0.1UF,20%,50V	04222	MA205E104MAA
A11A1C222	281-0775-00			CAP.,FXD,CER DI:0.1UF,20%,50V	04222	MA205E104MAA
A11A1C330	285-0931-00			CAP.,FXD,PLSTC:0.005UF,5%,2000V	56289	715P184
A11A1C410	285-0932-00			CAP.,FXD,PLSTC:1UF,10%,400V	14752	230B1E105K
A11A1C412	283-0267-00			CAP.,FXD,CER DI:0.01UF,20%,500V	60705	562CBD501AL103MA
A11A1C421	283-0078-00			CAP.,FXD,CER DI:0.001UF,20%,500V	59660	0801 547X5F0102M
A11A1C422	283-0335-00			CAP.,FXD,CER DI:0.1UF,20%,600V	51642	500 600W5R104M
A11A1C430	290-0770-00			CAP.,FXD,ELCTLT:100UF,+50-10%,25V	56289	502D230
A11A1C510	281-0572-00			CAP.,FXD,CER DI:6.8PF,+/-0.5PF,500V	59660	301-000C0H0689D
A11A1C520	283-0134-00			CAP.,FXD,CER DI:0.47UF,+80-20%,50V	72982	8131N087Z5U0474Z
A11A1C521	283-0644-00			CAP.,FXD,MICA D:150PF,1%,500V	00853	D155F151F0
A11A1C530	283-0644-00			CAP.,FXD,MICA D:150PF,1%,500V	00853	D155F151F0
A11A1C540	290-0770-00			CAP.,FXD,ELCTLT:100UF,+50-10%,25V	56289	502D230
A11A1C541	290-0770-00			CAP.,FXD,ELCTLT:100UF,+50-10%,25V	56289	502D230
A11A1C542	283-0599-00			CAP.,FXD,MICA D:98PF,5%,500V	00853	D105F980J0
A11A1C610	281-0775-00			CAP.,FXD,CER DI:0.1UF,20%,50V	04222	MA205E104MAA
A11A1C611	281-0775-00			CAP.,FXD,CER DI:0.1UF,20%,50V	04222	MA205E104MAA
A11A1C612	281-0775-00			CAP.,FXD,CER DI:0.1UF,20%,50V	04222	MA205E104MAA
A11A1C613	281-0775-00			CAP.,FXD,CER DI:0.1UF,20%,50V	04222	MA205E104MAA
A11A1C614	283-0134-00			CAP.,FXD,CER DI:0.47UF,+80-20%,50V	72982	8131N087Z5U0474Z
A11A1C620	283-0644-00			CAP.,FXD,MICA D:150PF,1%,500V	00853	D155F151F0
A11A1C621	285-0659-00			CAP.,FXD,PLSTC:0.001UF,10%,100V	84411	TEK24-10291
A11A1C630	290-0778-00			CAP.,FXD,ELCTLT:1UF,+50-10%,50V	54473	ECE-A50N1
A11A1C631	281-0775-00			CAP.,FXD,CER DI:0.1UF,20%,50V	04222	MA205E104MAA
A11A1C640	283-0793-00			CAP.,FXD,MICA D:3035PF,1%,500V	09023	CD19FD(3035)F03
A11A1C641	281-0775-00			CAP.,FXD,CER DI:0.1UF,20%,50V	04222	MA205E104MAA
A11A1C720	281-0775-00			CAP.,FXD,CER DI:0.1UF,20%,50V	04222	MA205E104MAA
A11A1C730	281-0775-00			CAP.,FXD,CER DI:0.1UF,20%,50V	04222	MA205E104MAA
A11A1C731	283-0067-00			CAP.,FXD,CER DI:0.001UF,10%,200V	59660	835-515-Z5D0102K
A11A1C732	283-0142-00			CAP.,FXD,CER DI:0.0027UF,5%,200V	59660	875571YEE0272J
A11A1C740	283-0041-00			CAP.,FXD,CER DI:0.0033UF,5%,500V	59660	841-542B332J

Component No.	Tektronix Part No.	Serial/Model No. Eff	Dscont	Name & Description	Mfr Code	Mfr Part Number
A11A1C810	290-0770-00			CAP.,FXD,ELCTLT:100UF,+50-10%,25V	56289	502D230
A11A1C811	290-0770-00			CAP.,FXD,ELCTLT:100UF,+50-10%,25V	56289	502D230
A11A1C820	283-0773-00			CAP.,FXD,MICA D:578PF,1%,300V	00853	D15-3F5780F0
A11A1C830	281-0572-00			CAP.,FXD,CER DI:6.8PF,+/-0.5PF,500V	59660	301-000C0H0689D
A11A1C831	290-0804-00			CAP.,FXD,ELCTLT:10UF,+50-10%,25V	55680	ULA1E100TEA
A11A1C840	283-0239-00			CAP.,FXD,CER DI:0.022UF,10%,50V	72982	8121N083X7R0223K
A11A1C910	290-0778-00			CAP.,FXD,ELCTLT:1UF,+50-10%,50V	54473	ECE-A50N1
A11A1C911	290-0770-00			CAP.,FXD,ELCTLT:100UF,+50-10%,25V	56289	502D230
A11A1C920	285-0932-00			CAP.,FXD,PLSTC:1UF,10%,400V	14752	230B1E105K
A11A1C921	283-0189-00			CAP.,FXD,CER DI:0.1UF,20%,400V	56289	5C40X5R104M400B
A11A1C930	283-0028-00			CAP.,FXD,CER DI:0.0022UF,20%,50V	59660	0805585Y5SO222M
A11A1C931	283-0600-00			CAP.,FXD,MICA D:43PF,5%,500V	00853	D105E430J0
A11A1C940	281-0775-00			CAP.,FXD,CER DI:0.1UF,20%,50V	04222	MA205E104MAA
A11A1C941	281-0775-00			CAP.,FXD,CER DI:0.1UF,20%,50V	04222	MA205E104MAA
A11A1C942	283-0067-00			CAP.,FXD,CER DI:0.001UF,10%,200V	59660	835-515-Z5D0102K
A11A1C943	290-0569-00			CAP.,FXD,ELCTLT:50UF,+75-10%,250V	56289	68D10476
A11A1CR133	152-0322-00	B010121	B010159	SEMICOND DEVICE:SILICON,15V,HOT CARRIER	50434	5082-2672
A11A1CR310	152-0789-00			SEMICOND DEVICE:SILICON,RECT,1000V,3.0A	04713	SR3681K
A11A1CR311	152-0789-00			SEMICOND DEVICE:SILICON,RECT,1000V,3.0A	04713	SR3681K
A11A1CR320	152-0385-00	B010100	B010114	SEMICOND DEVICE:SILICON,2000V,100MA	83003	VB20-2
A11A1CR320	152-0639-00	B010115		SEMICOND DEVICE:RECT,SI,10KV,10MA	52306	CX345
A11A1CR339	152-0066-00			SEMICOND DVC DI:RECT,SI,400V,1A,D0-41	05828	GP10G-020
A11A1CR410	152-0141-02			SEMICOND DVC,DI:SW,SI,30V,150MA,30V,DO-35	01295	1N4152R
A11A1CR421	152-0141-02			SEMICOND DVC,DI:SW,SI,30V,150MA,30V,DO-35	01295	1N4152R
A11A1CR510	152-0141-02			SEMICOND DVC,DI:SW,SI,30V,150MA,30V,DO-35	01295	1N4152R
A11A1CR511	152-0141-02			SEMICOND DVC,DI:SW,SI,30V,150MA,30V,DO-35	01295	1N4152R
A11A1CR512	152-0141-02			SEMICOND DVC,DI:SW,SI,30V,150MA,30V,DO-35	01295	1N4152R
A11A1CR513	152-0141-02			SEMICOND DVC,DI:SW,SI,30V,150MA,30V,DO-35	01295	1N4152R
A11A1CR520	152-0141-02			SEMICOND DVC,DI:SW,SI,30V,150MA,30V,DO-35	01295	1N4152R
A11A1CR521	152-0141-02			SEMICOND DVC,DI:SW,SI,30V,150MA,30V,DO-35	01295	1N4152R
A11A1CR522	152-0141-02			SEMICOND DVC,DI:SW,SI,30V,150MA,30V,DO-35	01295	1N4152R
A11A1CR609	152-0141-02			SEMICOND DVC,DI:SW,SI,30V,150MA,30V,DO-35	01295	1N4152R
A11A1CR610	152-0141-02			SEMICOND DVC,DI:SW,SI,30V,150MA,30V,DO-35	01295	1N4152R
A11A1CR620	152-0141-02			SEMICOND DVC,DI:SW,SI,30V,150MA,30V,DO-35	01295	1N4152R
A11A1CR630	152-0141-02			SEMICOND DVC,DI:SW,SI,30V,150MA,30V,DO-35	01295	1N4152R
A11A1CR710	152-0141-02			SEMICOND DVC,DI:SW,SI,30V,150MA,30V,DO-35	01295	1N4152R
A11A1CR711	152-0141-02			SEMICOND DVC,DI:SW,SI,30V,150MA,30V,DO-35	01295	1N4152R
A11A1CR720	152-0066-00			SEMICOND DVC DI:RECT,SI,400V,1A,D0-41	05828	GP10G-020
A11A1CR730	152-0457-00			SEMICOND DEVICE:SILICON,25V	28480	5082-2068
A11A1CR731	152-0457-00			SEMICOND DEVICE:SILICON,25V	28480	5082-2068
A11A1CR741	152-0457-00			SEMICOND DEVICE:SILICON,25V	28480	5082-2068
A11A1CR812	152-0457-00			SEMICOND DEVICE:SILICON,25V	28480	5082-2068
A11A1CR930	152-0141-02			SEMICOND DVC,DI:SW,SI,30V,150MA,30V,DO-35	01295	1N4152R
A11A1CR931	152-0141-02			SEMICOND DVC,DI:SW,SI,30V,150MA,30V,DO-35	01295	1N4152R
A11A1CR940	152-0141-02			SEMICOND DVC,DI:SW,SI,30V,150MA,30V,DO-35	01295	1N4152R
A11A1F820	159-0042-00			FUSE,CARTRIDGE:3AG,0.75A,250V,FAST-BLOW	71400	AGC 3/4
A11A1L110	108-1078-00			COIL,RF:FIXED,1.85MH	80009	108-1078-00
A11A1L121	108-0734-00	B010100	B010159	COIL,RF:FIXED,160NH	80009	108-0734-00
A11A1L135	108-0245-00	B010160		COIL,RF:3.9UH	76493	B6310-1
A11A1L340	108-1079-00			COIL,RF:FIXED,ASSEMBLY,(2)25MH	80009	108-1079-00
A11A1Q121	151-0349-04	B010100	B010159	TRANSISTOR:SILICON,NPN,SCREENED	80009	151-0349-04
A11A1Q121	151-0701-01	B010160		TRANSISTOR:25C2527G,SCREENED	000IG	23C2527-G-TEK2
A11A1Q131	151-0103-02			TRANSISTOR:SILICON,NPN,SEL	04713	OBD
A11A1Q132	151-0134-00			TRANSISTOR:SILICON,PNP	80009	151-0134-00

Component No.	Tektronix Part No.	Serial/Model No. Eff	Dscont	Name & Description	Mfr Code	Mfr Part Number
A11A1Q133	151-0349-04	B010100	B010159	TRANSISTOR:SILICON,NPN,SCREENED	80009	151-0349-04
A11A1Q133	151-0701-01	B010160		TRANSISTOR:25C2527G,SCREENED	000IG	23C2527-G-TEK2
A11A1Q210	151-0476-00			TRANSISTOR:SILICON,NPN	02735	68430
A11A1Q230	151-0482-01			TRANSISTOR:SILICON,PNP	80009	151-0482-01
A11A1Q240	151-0301-02			TRANSISTOR:SILICON,PNP	04713	2N2907A
A11A1Q330	151-0747-00			TRANSISTOR:SILICON,NPN	04713	SJ6926
A11A1Q346	151-0405-02			TRANSISTOR:SILICON,NPN,SCREENED	80009	151-0405-02
A11A1Q440	151-0405-02			TRANSISTOR:SILICON,NPN,SCREENED	80009	151-0405-02
A11A1Q441	151-0192-03			TRANSISTOR:SILICON,NPN	80009	151-0192-03
A11A1Q442	151-0405-02			TRANSISTOR:SILICON,NPN,SCREENED	80009	151-0405-02
A11A1Q510	151-0302-01			TRANSISTOR:SILICON,NPN,SEL	80009	151-0302-01
A11A1Q610	151-0192-03			TRANSISTOR:SILICON,NPN	80009	151-0192-03
A11A1Q630	151-0301-02			TRANSISTOR:SILICON,PNP	04713	2N2907A
A11A1Q720	151-0443-02			TRANSISTOR:SILICON,PNP	80009	151-0443-02
A11A1Q721	151-0444-03			TRANSISTOR:SILICON,NPN	80009	151-0444-03
A11A1Q740	151-0302-01			TRANSISTOR:SILICON,NPN,SEL	80009	151-0302-01
A11A1Q920	151-0315-00			TRANSISTOR:SILICON,NPN	04713	SJ7032
A11A1Q930	151-0169-01			TRANSISTOR:SILICON,NPN,SEL	04713	ST830H
A11A1Q931	151-0280-01			TRANSISTOR:SILICON,PNP,SEL	04713	ST1390H
A11A1R110	308-0123-00			RES.,FXD,WW:20 OHM,5%,5W	05347	CS6-20 R0J
A11A1R111	307-0103-00			RES.,FXD,CMPSN:2.7 OHM,5%,0.25W	01121	CB27G5
A11A1R112	315-0181-00			RES.,FXD,CMPSN:180 OHM,5%,0.25W	01121	CB1815
A11A1R121	308-0677-00			RES.,FXD,WW:1 OHM,5%,2W	75042	BWH-1R000J
A11A1R122	308-0677-00			RES.,FXD,WW:1 OHM,5%,2W	75042	BWH-1R000J
A11A1R131	315-0100-00	B010100	B010159	RES.,FXD,CMPSN:10 OHM,5%,0.25W	01121	CB1005
A11A1R132	315-0221-00	B010100	B010120	RES.,FXD,CMPSN:220 OHM,5%,0.25W	01121	CB2215
A11A1R132	315-0680-00	B010121	B010159	RES.,FXD,CMPSN:68 OHM,5%,0.25W	01121	CB6805
A11A1R132	315-0220-00	B010160		RES.,FXD,CMPSN:22 OHM,5%,0.25W	01121	CB2205
A11A1R133	315-0221-00	B010100	B010120	RES.,FXD,CMPSN:220 OHM,5%,0.25W	01121	CB2215
A11A1R133	315-0241-00	B010160		RES.,FXD,CMPSN:240 OHM,5%,0.25W	01121	CB2415
A11A1R134	315-0181-00			RES.,FXD,CMPSN:180 OHM,5%,0.25W	01121	CB1815
A11A1R135	315-0241-00	B010160		RES.,FXD,CMPSN:240 OHM,5%,0.25W	01121	CB2415
A11A1R136	315-0220-00			RES.,FXD,CMPSN:22 OHM,5%,0.25W	01121	CB2205
A11A1R136	------ ------			(USED WITH 670-6350-01 ONLY)		
A11A1R141	315-0151-00			RES.,FXD,CMPSN:150 OHM,5%,0.25W	01121	CB1515
A11A1R142	315-0330-00			RES.,FXD,CMPSN:33 OHM,5%,0.25W	01121	CB3305
A11A1R143	321-0331-00	B010100	B010159	RES.,FXD,FILM:27.4K OHM,1%,0.125W	91637	MFF1816G27401F
A11A1R143	321-0312-00	B010160		RES.,FXD,FILM:17.4K OHM,1%,0.125W	91637	MFF1816G17401F
A11A1R144	311-1245-00	B010100	B010159	RES.,VAR,NONWIR:10K OHM,10%,0.50W	73138	72-28-0
A11A1R144	311-1240-00	B010160		RES.,VAR,NONWIR:25K OHM,10%,0.50W	73138	72-30-0
A11A1R146	321-0273-00			RES.,FXD,FILM:6.81K OHM,1%,0.125W	91637	MFF1816G68100F
A11A1R147	315-0330-00			RES.,FXD,CMPSN:33 OHM,5%,0.25W	01121	CB3305
A11A1R148	315-0752-00			RES.,FXD,CMPSN:7.5K OHM,5%,0.25W	01121	CB7525
A11A1R149	311-1245-00			RES.,VAR,NONWIR:10K OHM,10%,0.50W	73138	72-28-0
A11A1R230	321-0239-00			RES.,FXD,FILM:3.01K OHM,1%,0.125W	91637	MFF1816G30100F
A11A1R240	321-0351-00			RES.,FXD,FILM:44.2K OHM,1%,0.125W	91637	MFF1816G44201F
A11A1R241	315-0302-00			RES.,FXD,CMPSN:3K OHM,5%,0.25W	01121	CB3025
A11A1R242	315-0121-00			RES.,FXD,CMPSN:120 OHM,5%,0.25W	01121	CB1215
A11A1R243	307-0103-00			RES.,FXD,CMPSN:2.7 OHM,5%,0.25W	01121	CB27G5
A11A1R244	308-0837-00			RES.,FXD,WW:6.2 OHM,1%,7.0W	05347	CS7-6R20F
A11A1R245	315-0183-00			RES.,FXD,CMPSN:18K OHM,5%,0.25W	01121	CB1835
A11A1R246	315-0751-00			RES.,FXD,CMPSN:750 OHM,5%,0.25W	01121	CB7515
A11A1R312	301-0104-00			RES.,FXD,CMPSN:100K OHM,5%,0.5W	01121	EB1045
A11A1R319	301-0104-00			RES.,FXD,CMPSN:100K OHM,5%,0.5W	01121	EB1045

Component No.	Tektronix Part No.	Serial/Model No. Eff	Dscont	Name & Description	Mfr Code	Mfr Part Number
A11A1R330	308-0838-00			RES.,FXD,WW:12.0 OHM,1%,5.0W	05347	CS6-12R0F
A11A1R339	315-0102-00			RES.,FXD,CMPSN:1K OHM,5%,0.25W	01121	CB1025
A11A1R345	315-0470-00			RES.,FXD,CMPSN:47 OHM,5%,0.25W	01121	CB4705
A11A1R346	315-0102-00			RES.,FXD,CMPSN:1K OHM,5%,0.25W	01121	CB1025
A11A1R347	315-0153-00			RES.,FXD,CMPSN:15K OHM,5%,0.25W	01121	CB1535
A11A1R409	315-0332-00			RES.,FXD,CMPSN:3.3K OHM,5%,0.25W	01121	CB3325
A11A1R410	315-0103-00			RES.,FXD,CMPSN:10K OHM,5%,0.25W	01121	CB1035
A11A1R411	315-0273-00			RES.,FXD,CMPSN:27K OHM,5%,0.25W	01121	CB2735
A11A1R412	315-0473-00			RES.,FXD,CMPSN:47K OHM,5%,0.25W	01121	CB4735
A11A1R420	305-0303-00			RES.,FXD,CMPSN:30K OHM,5%,2W	01121	HB3035
A11A1R430	315-0153-00			RES.,FXD,CMPSN:15K OHM,5%,0.25W	01121	CB1535
A11A1R431	315-0103-00			RES.,FXD,CMPSN:10K OHM,5%,0.25W	01121	CB1035
A11A1R432	315-0101-00			RES.,FXD,CMPSN:100 OHM,5%,0.25W	01121	CB1015
A11A1R440	315-0470-00			RES.,FXD,CMPSN:47 OHM,5%,0.25W	01121	CB4705
A11A1R441	315-0102-00			RES.,FXD,CMPSN:1K OHM,5%,0.25W	01121	CB1025
A11A1R510	315-0471-00			RES.,FXD,CMPSN:470 OHM,5%,0.25W	01121	CB4715
A11A1R511	321-0193-00			RES.,FXD,FILM:1K OHM,1%,0.125W	01121	ORD BY DESCR
A11A1R512	321-0294-00			RES.,FXD,FILM:11.3K OHM,1%,0.125W	91637	CMF55116G11301F
A11A1R513	315-0152-00			RES.,FXD,CMPSN:1.5K OHM,5%,0.25W	01121	CB1525
A11A1R514	315-0101-00			RES.,FXD,CMPSN:100 OHM,5%,0.25W	01121	CB1015
A11A1R520	315-0332-00			RES.,FXD,CMPSN:3.3K OHM,5%,0.25W	01121	CB3325
A11A1R521	315-0102-00			RES.,FXD,CMPSN:1K OHM,5%,0.25W	01121	CB1025
A11A1R522	315-0102-00			RES.,FXD,CMPSN:1K OHM,5%,0.25W	01121	CB1025
A11A1R523	315-0153-00			RES.,FXD,CMPSN:15K OHM,5%,0.25W	01121	CB1535
A11A1R530	315-0101-00			RES.,FXD,CMPSN:100 OHM,5%,0.25W	01121	CB1015
A11A1R531	315-0153-00			RES.,FXD,CMPSN:15K OHM,5%,0.25W	01121	CB1535
A11A1R532	315-0103-00			RES.,FXD,CMPSN:10K OHM,5%,0.25W	01121	CB1035
A11A1R533	321-0296-00			RES.,FXD,FILM:11.8K OHM,1%,0.125W	91637	MFF1816G11801F
A11A1R609	315-0103-03			RES.,FXD,CMPSN:10K OHM,5%,0.25W	01121	CB1035
A11A1R610	315-0562-00			RES.,FXD,CMPSN:5.6K OHM,5%,0.25W	01121	CB5625
A11A1R611	315-0682-00			RES.,FXD,CMPSN:6.8K OHM,5%,0.25W	01121	CB6825
A11A1R612	315-0203-00			RES.,FXD,CMPSN:20K OHM,5%,0.25W	01121	CB2035
A11A1R613	315-0102-00			RES.,FXD,CMPSN:1K OHM,5%,0.25W	01121	CB1025
A11A1R614	315-0123-00			RES.,FXD,CMPSN:12K OHM,5%,0.25W	01121	CB1235
A11A1R620	311-1860-00			RES.,VAR,NONWIR:TRMR,10K OHM,0.50W	32997	3299X-R27-103
A11A1R621	315-0103-00			RES.,FXD,CMPSN:10K OHM,5%,0.25W	01121	CB1035
A11A1R622	315-0122-00			RES.,FXD,CMPSN:1.2K OHM,5%,0.25W	01121	CB1225
A11A1R623	321-0280-00			RES.,FXD,FILM:8.06K OHM,1%,0.125W	91637	MFF1816G80600F
A11A1R624	315-0103-00			RES.,FXD,CMPSN:10K OHM,5%,0.25W	01121	CB1035
A11A1R625	315-0103-00			RES.,FXD,CMPSN:10K OHM,5%,0.25W	01121	CB1035
A11A1R626	315-0245-00			RES.,FXD,CMPSN:2.4M OHM,5%,0.25W	01121	CB2455
A11A1R630	315-0222-00			RES.,FXD,CMPSN:2.2K OHM,5%,0.25W	01121	CB2225
A11A1R631	315-0153-00			RES.,FXD,CMPSN:15K OHM,5%,0.25W	01121	CB1535
A11A1R632	315-0102-00			RES.,FXD,CMPSN:1K OHM,5%,0.25W	01121	CB1025
A11A1R633	315-0102-00			RES.,FXD,CMPSN:1K OHM,5%,0.25W	01121	CB1025
A11A1R634	315-0101-00			RES.,FXD,CMPSN:100 OHM,5%,0.25W	01121	CB1015
A11A1R635	321-0289-00			RES.,FXD,FILM:10K OHM,1%,0.125W	91637	MFF1816G10001F
A11A1R640	321-0283-00			RES.,FXD,FILM:8.66K OHM,1%,0.125W	91637	CMF55116G86600F
A11A1R641	315-0184-00			RES.,FXD,CMPSN:180K OHM,5%,0.25W	01121	CB1845
A11A1R710	315-0303-00			RES.,FXD,CMPSN:30K OHM,5%,0.25W	01121	CB3035
A11A1R711	315-0470-00			RES.,FXD,CMPSN:47 OHM,5%,0.25W	01121	CB4705
A11A1R712	308-0836-00			RES.,FXD,WW:1.2 OHM,5%,1W,FUSIBLE	75042	BW-20F-1.2 OHM
A11A1R720	321-0262-00			RES.,FXD,FILM:5.23K OHM,1%,0.125W	91637	MFF1816G52300F
A11A1R721	323-0412-00			RES.,FXD,FILM:191K OHM,1%,0.50W	75042	CECT0-1913F

Component No.	Tektronix Part No.	Serial/Model No. Eff	Dscont	Name & Description	Mfr Code	Mfr Part Number
A11A1R722	315-0203-00			RES.,FXD,CMPSN:20K OHM,5%,0.25W	01121	CB2035
A11A1R723	311-0609-00			RES.,VAR,NONWIR:2K OHM,10%,0.50W	73138	82-26-1
A11A1R724	311-0660-00			RES.,VAR,NONWIR:TRMR,200K OHM,0.5W	73138	82-35-1
A11A1R730	315-0392-00			RES.,FXD,CMPSN:3.9K OHM,5%,0.25W	01121	CB3925
A11A1R731	321-0356-00			RES.,FXD,FILM:49.9K OHM,1%,0.125W	91637	MFF1816G49901F
A11A1R732	321-0356-00			RES.,FXD,FILM:49.9K OHM,1%,0.125W	91637	MFF1816G49901F
A11A1R733	321-0289-00			RES.,FXD,FILM:10K OHM,1%,0.125W	91637	MFF1816G10001F
A11A1R734	315-0563-00			RES.,FXD,CMPSN:56K OHM,5%,0.25W	01121	CB5635
A11A1R735	315-0273-00			RES.,FXD,CMPSN:27K OHM,5%,0.25W	01121	CB2735
A11A1R739	315-0512-00			RES.,FXD,CMPSN:5.1K OHM,5%,0.25W	01121	CB5125
A11A1R740	315-0362-00			RES.,FXD,CMPSN:3.6K OHM,5%,0.25W	01121	CB3625
A11A1R741	315-0473-00			RES.,FXD,CMPSN:47K OHM,5%,0.25W	01121	CB4735
A11A1R742	315-0473-00			RES.,FXD,CMPSN:47K OHM,5%,0.25W	01121	CB4735
A11A1R743	315-0133-00			RES.,FXD,CMPSN:13K OHM,5%,0.25W	01121	CB1335
A11A1R744	315-0822-00			RES.,FXD,CMPSN:8.2K OHM,5%,0.25W	01121	CB8225
A11A1R745	315-0153-00			RES.,FXD,CMPSN:15K OHM,5%,0.25W	01121	CB1535
A11A1R746	315-0103-00			RES.,FXD,CMPSN:10K OHM,5%,0.25W	01121	CB1035
A11A1R747	315-0103-00			RES.,FXD,CMPSN:10K OHM,5%,0.25W	01121	CB1035
A11A1R810	308-0836-00			RES.,FXD,WW:1.2 OHM,5%,1W,FUSIBLE	75042	BW-20F-1.2 OHM
A11A1R811	315-0102-00			RES.,FXD,CMPSN:1K OHM,5%,0.25W	01121	CB1025
A11A1R812	315-0100-00			RES.,FXD,CMPSN:10 OHM,5%,0.25W	01121	CB1005
A11A1R813	308-0836-00			RES.,FXD,WW:1.2 OHM,5%,1W,FUSIBLE	75042	BW-20F-1.2 OHM
A11A1R820	315-0513-00			RES.,FXD,CMPSN:51K OHM,5%,0.25W	01121	CB5135
A11A1R821	303-0100-00			RES.,FXD,CMPSN:10 OHM,5%,1W	01121	GB1005
A11A1R822	308-0836-00			RES.,FXD,WW:1.2 OHM,5%,1W,FUSIBLE	75042	BW-20F-1.2 OHM
A11A1R823	301-0104-00			RES.,FXD,CMPSN:100K OHM,5%,0.5W	01121	EB1045
A11A1R830	315-0185-00			RES.,FXD,CMPSN:1.8M OHM,5%,0.25W	01121	CB1855
A11A1R831	321-0256-00			RES.,FXD,FILM:4.53K OHM,1%,0.125W	91637	MFF1816G45300F
A11A1R832	321-0304-00			RES.,FXD,FILM:14.3K OHM,1%,0.125W	91637	MFF1816G14301F
A11A1R833	315-0275-00			RES.,FXD,CMPSN:2.7M OHM,5%,0.25W	01121	CB2755
A11A1R834	321-0380-00			RES.,FXD,FILM:88.7K OHM,1%,0.125W	91637	MFF1816G88701F
A11A1R835	321-1714-03			RES.,FXD,FILM:120K OHM,0.25%,0.125W	91637	MFF1816D12002C
A11A1R836	321-0193-00			RES.,FXD,FILM:1K OHM,1%,0.125W	01121	ORD BY DESCR
A11A1R837	315-0202-00			RES.,FXD,CMPSN:2K OHM,5%,0.25W	01121	CB2025
A11A1R840	315-0103-00			RES.,FXD,CMPSN:10K OHM,5%,0.25W	01121	CB1035
A11A1R841	315-0225-00			RES.,FXD,CMPSN:2.2M OHM,5%,0.25W	01121	CB2255
A11A1R842	315-0755-00			RES.,FXD,CMPSN:7.5M OHM,5%,0.25W	01121	CB7555
A11A1R843	315-0750-00			RES.,FXD,CMPSN:75 OHM,5%,0.25W	01121	CB7505
A11A1R844	321-0265-00			RES.,FXD,FILM:5.62K OHM,1%,0.125W	91637	MFF1816G56200F
A11A1R845	315-0562-00			RES.,FXD,CMPSN:5.6K OHM,5%,0.25W	01121	CB5625
A11A1R846	321-0272-00			RES.,FXD,FILM:6.65K OHM,1%,0.125W	91637	MFF1816G66500F
A11A1R920	308-0344-00			RES.,FXD,WW:18.2 OHM,1%,3W	91637	RS2B-18R20F-TR
A11A1R921	315-0561-00			RES.,FXD,CMPSN:560 OHM,5%,0.25W	01121	CB5615
A11A1R922	315-0101-00			RES.,FXD,CMPSN:100 OHM,5%,0.25W	01121	CB1015
A11A1R929	315-0103-00			RES.,FXD,CMPSN:10K OHM,5%,0.25W	01121	CB1035
A11A1R930	315-0562-00			RES.,FXD,CMPSN:5.6K OHM,5%,0.25W	01121	CB5625
A11A1R931	315-0103-00			RES.,FXD,CMPSN:10K OHM,5%,0.25W	01121	CB1035
A11A1R932	315-0681-00			RES.,FXD,CMPSN:680 OHM,5%,0.25W	01121	CB6815
A11A1T110	120-1320-00	B010100	B010159	TRANSFORMER,RF:HORIZ LINEARITY	80009	120-1320-00
A11A1T110	120-1434-00	B010160		TRANSFORMER,RF:HORIZ LINEARITY	80009	120-1434-00
A11A1T111	120-1319-00			TRANSFORMER,RF:TOROID,2 WINDINGS	80009	120-1319-00
A11A1T320	120-1318-00			TRANSFORMER,RF:HORIZ DEFLECTION	80009	120-1318-00
A11A1U141	156-0742-02			MICROCIRCUIT,LI:OPERATIONAL AMPLIFIER,SEL	01295	LM318JG
A11A1U230	156-0067-13			MICROCIRCUIT,LI:OPNL AMPL,SELECTED	01295	UA741CJG4

Component No.	Tektronix Part No.	Serial/Model No. Eff	Dscont	Name & Description	Mfr Code	Mfr Part Number
A11A1U510	156-0742-02			MICROCIRCUIT,LI:OPERATIONAL AMPLIFIER,SEL	01295	LM318JG
A11A1U511	156-1126-01			MICROCIRCUIT,LI:VOLTAGE COMPARATOR,SEL	01295	LM311JG4
A11A1U520	156-0275-01			MICROCIRCUIT,DI:DIFF LINE DRVR,SCRN	07263	9614
A11A1U530	156-0721-02			MICROCIRCUIT,DI:QUAD 2-IN NAND SCHMITT TRI	04713	SN74LS132NDS
A11A1U620	156-0936-00			MICROCIRCUIT,LI:OPERATIONAL AMPLIFIER	80009	156-0936-00
A11A1U630	156-0706-02			MICROCIRCUIT,DI:DUAL MONOSTABLE MV W/SCHMIT	01295	SN74221 (NP3 OR
A11A1U730	156-0158-03			MICROCIRCUIT,LI:DUAL OPNL AMPL,CHK	80009	156-0158-03
A11A1U830	156-0514-01			MICROCIRCUIT,DI:DIFF 4-CHANNEL MUX,SEL	80009	156-0514-01
A11A1U910	156-0277-01			MICROCIRCUIT,LI:POSITIVE VOLTAGE REG	04713	MC7805CTD
A11A1U940	156-1191-01			MICROCIRCUIT,LI:DUAL BI-FET OP-AMP,8 DIP	01295	TL072ACP3
A11A1VR420	152-0195-01			SEMICOND DEVICE:ZENER,0.4W,5.1V,5%,TESTED	80009	152-0195-01
A11A1VR611	152-0688-00			SEMICOND DEVICE:ZENER,2.4V,5%,0.4W	04713	1N4370A
A11A1W247	131-0566-00			BUS CONDUCTOR:DUMMY RES,2.375,22 AWG	57668	JWW-0200E0

Component No.	Tektronix Part No.	Serial/Model No. Eff	Dscont	Name & Description	Mfr Code	Mfr Part Number
A11A2	670-6352-00	B010100	B010409	CKT BOARD ASSY:H DELAY STABILIZER	80009	670-6352-00
A11A2	670-6352-03	B010410		CKT BOARD ASSY:H DELAY STABILIZER	80009	670-6352-03
A11A2C106	285-1214-00			CAP.,FXD,PLSTC:0.350UF,2%,400V	84411	TEK-221-35424
A11A2C107	285-1230-00			CAP.,FXD,PLSTC:0.055UF,2%,400V	84411	TEK240-55324
A11A2C108	285-1227-00			CAP.,FXD,MTLZD:0.15UF,2%,400V	84411	X363UW-15424
A11A2C116	290-0771-00			CAP.,FXD,ELCTLT:220UF,+50-10%,10VDC	56289	502D231
A11A2C117	281-0775-00			CAP.,FXD,CER DI:0.1UF,20%,50V	04222	MA205E104MAA
A11A2C120	281-0775-00			CAP.,FXD,CER DI:0.1UF,20%,50V	04222	MA205E104MAA
A11A2C121	290-0804-00			CAP.,FXD,ELCTLT:10UF,+50-10%,25V	55680	ULA1E100TEA
A11A2C123	290-0804-00			CAP.,FXD,ELCTLT:10UF,+50-10%,25V	55680	ULA1E100TEA
A11A2C124	283-0603-00			CAP.,FXD,MICA D:113PF,2%,300V	00853	D155F1130G0
A11A2C138	283-0594-00			CAP.,FXD,MICA D:0.001UF,1%,100V	00853	D151F102F0
A11A2C210	285-1214-00			CAP.,FXD,PLSTC:0.350UF,2%,400V	84411	TEK-221-35424
A11A2C222	283-0599-00			CAP.,FXD,MICA D:98PF,5%,500V	00853	D105F980J0
A11A2C230	283-0672-00			CAP.,FXD,MICA D:200PF,1%,500V	00853	D155F2010F0
A11A2C231	283-0397-00			CAP.,FXD,CER DI:1160PF,2%,100V	T1356	RPE122901COG122G
A11A2C232	281-0775-00			CAP.,FXD,CER DI:0.1UF,20%,50V	04222	MA205E104MAA
A11A2C235	283-0616-00			CAP.,FXD,MICA D:75PF,5%,500V	00853	D155E750J0
A11A2C300	283-0618-00			CAP.,FXD,MICA D:130PF,2%,400V	00853	D155F131G0
A11A2C310	285-1229-00			CAP.,FXD,MTLZD:1.84UF,5%,400V	84411	X363UW-1845-54
A11A2C314	290-0804-00			CAP.,FXD,ELCTLT:10UF,+50-10%,25V	55680	ULA1E100TEA
A11A2C315	281-0775-00			CAP.,FXD,CER DI:0.1UF,20%,50V	04222	MA205E104MAA
A11A2C321	281-0775-00			CAP.,FXD,CER DI:0.1UF,20%,50V	04222	MA205E104MAA
A11A2C322	283-0058-00			CAP.,FXD,CER DI:0.027UF,10%,100V	56289	1C20X7R273K100B
A11A2C324	281-0775-00			CAP.,FXD,CER DI:0.1UF,20%,50V	04222	MA205E104MAA
A11A2C328	285-0659-00			CAP.,FXD,PLSTC:0.001UF,10%,100V	84411	TEK24-10291
A11A2C332	281-0775-00			CAP.,FXD,CER DI:0.1UF,20%,50V	04222	MA205E104MAA
A11A2C333	281-0775-00			CAP.,FXD,CER DI:0.1UF,20%,50V	04222	MA205E104MAA
A11A2C335	285-0597-00			CAP.,FXD,PLSTC:0.001UF,1%,100V	14752	41OB1B102F
A11A2C357	285-1228-00			CAP.,FXD,MTLZD:0.82UF,5%,400V	84411	X363UW-82454
A11A2C406	281-0775-00			CAP.,FXD,CER DI:0.1UF,20%,50V	04222	MA205E104MAA
A11A2C407	281-0775-00			CAP.,FXD,CER DI:0.1UF,20%,50V	04222	MA205E104MAA
A11A2C415	281-0775-00			CAP.,FXD,CER DI:0.1UF,20%,50V	04222	MA205E104MAA
A11A2C420	283-0142-00			CAP.,FXD,CER DI:0.0027UF,5%,200V	59660	875571YEE0272J
A11A2C421	281-0775-00			CAP.,FXD,CER DI:0.1UF,20%,50V	04222	MA205E104MAA
A11A2C422	283-0142-00			CAP.,FXD,CER DI:0.0027UF,5%,200V	59660	875571YEE0272J
A11A2C429	283-0198-00			CAP.,FXD,CER DI:0.22UF,20%,50V	56289	1C10Z5U223M050B
A11A2C435	290-0804-00			CAP.,FXD,ELCTLT:10UF,+50-10%,25V	55680	ULA1E100TEA
A11A2C436	281-0775-00			CAP.,FXD,CER DI:0.1UF,20%,50V	04222	MA205E104MAA
A11A2CR127	152-0141-02			SEMICOND DVC,DI:SW,SI,30V,150MA,30V,DO-35	01295	1N4152R
A11A2CR128	152-0141-02			SEMICOND DVC,DI:SW,SI,30V,150MA,30V,DO-35	01295	1N4152R
A11A2CR132	152-0141-02			SEMICOND DVC,DI:SW,SI,30V,150MA,30V,DO-35	01295	1N4152R
A11A2CR133	152-0141-02			SEMICOND DVC,DI:SW,SI,30V,150MA,30V,DO-35	01295	1N4152R
A11A2CR136	152-0141-02			SEMICOND DVC,DI:SW,SI,30V,150MA,30V,DO-35	01295	1N4152R
A11A2CR137	152-0141-02			SEMICOND DVC,DI:SW,SI,30V,150MA,30V,DO-35	01295	1N4152R
A11A2CR221	152-0141-02			SEMICOND DVC,DI:SW,SI,30V,150MA,30V,DO-35	01295	1N4152R
A11A2CR223	152-0141-02			SEMICOND DVC,DI:SW,SI,30V,150MA,30V,DO-35	01295	1N4152R
A11A2CR226	152-0141-02			SEMICOND DVC,DI:SW,SI,30V,150MA,30V,DO-35	01295	1N4152R
A11A2CR407	152-0141-02			SEMICOND DVC,DI:SW,SI,30V,150MA,30V,DO-35	01295	1N4152R
A11A2CR410	152-0141-02			SEMICOND DVC,DI:SW,SI,30V,150MA,30V,DO-35	01295	1N4152R
A11A2CR412	152-0141-02			SEMICOND DVC,DI:SW,SI,30V,150MA,30V,DO-35	01295	1N4152R
A11A2CR414	152-0141-02			SEMICOND DVC,DI:SW,SI,30V,150MA,30V,DO-35	01295	1N4152R
A11A2CR421	152-0141-02			SEMICOND DVC,DI:SW,SI,30V,150MA,30V,DO-35	01295	1N4152R
A11A2CR427	152-0141-02			SEMICOND DVC,DI:SW,SI,30V,150MA,30V,DO-35	01295	1N4152R

Component No.	Tektronix Part No.	Serial/Model No. Eff	Dscont	Name & Description	Mfr Code	Mfr Part Number
A11A2CR428	152-0141-02			SEMICOND DVC,DI:SW,SI,30V,150MA,30V,DO-35	01295	1N4152R
A11A2CR508	152-0457-00			SEMICOND DEVICE:SILICON,25V	28480	5082-2068
A11A2CR508	----- -----			(ENDED USAGE 670-6352-00 ONLY)		
A11A2CR508	152-0457-01			SEMICOND DVC DI:SELECTED	T0040	152-0457-01
A11A2CR508	----- -----			(BEGAN USAGE 670-6352-03 ONLY)		
A11A2CR510	152-0457-00			SEMICOND DEVICE:SILICON,25V	28480	5082-2068
A11A2CR510	----- -----			(ENDED USAGE 670-6352-00 ONLY)		
A11A2CR510	152-0457-01			SEMICOND DVC,DI:SELECTED	T0040	152-0457-01
A11A2CR510	----- -----			(BEGAN USAGE 670-6352-03 ONLY)		
A11A2CR511	152-0141-02			SEMICOND DVC,DI:SW,SI,30V,150MA,30V,DO-35	01295	1N4152R
A11A2CR520	152-0141-02			SEMICOND DVC,DI:SW,SI,30V,150MA,30V,DO-35	01295	1N4152R
A11A2CR521	152-0457-00			SEMICOND DEVICE:SILICON,25V	28480	5082-2068
A11A2CR521	----- -----			(ENDED USAGE 670-6352-00 ONLY)		
A11A2CR521	152-0457-01			SEMICOND DVC,DI:SELECTED	T0040	152-0457-01
A11A2CR521	----- -----			(BEGAN USAGE 670-6352-03 ONLY)		
A11A2L115	108-0473-00			COIL,RF:150UH	80009	108-0473-00
A11A2Q221	151-0301-02			TRANSISTOR:SILICON,PNP	04713	2N2907A
A11A2Q223	151-0192-03			TRANSISTOR:SILICON,NPN	80009	151-0192-03
A11A2Q316	151-0301-02			TRANSISTOR:SILICON,PNP	04713	2N2907A
A11A2Q323	151-0188-03			TRANSISTOR:SILICON,PNP,SEL	80009	151-0188-03
A11A2Q323	----- -----			(BEGAN USAGE 670-6352-03 ONLY)		
A11A2Q331	151-0508-01			TRANSISTOR:UJT,ST,T0-68	80009	151-0508-01
A11A2Q332	151-0192-03			TRANSISTOR:SILICON,NPN	80009	151-0192-03
A11A2Q515	151-0302-01			TRANSISTOR:SILICON,NPN,SEL	80009	151-0302-01
A11A2Q528	151-0302-01			TRANSISTOR:SILICON,NPN,SEL	80009	151-0302-01
A11A2R114	315-0100-00			RES.,FXD,CMPSN:10 OHM,5%,0.25W	01121	CB1005
A11A2R115	315-0680-00			RES.,FXD,CMPSN:68 OHM,5%,0.25W	01121	CB6805
A11A2R117	321-0296-00			RES.,FXD,FILM:11.8K OHM,1%,0.125W	91637	MFF1816G11801F
A11A2R121	315-0100-00			RES.,FXD,CMPSN:10 OHM,5%,0.25W	01121	CB1005
A11A2R127	315-0101-00			RES.,FXD,CMPSN:100 OHM,5%,0.25W	01121	CB1015
A11A2R132	315-0101-00			RES.,FXD,CMPSN:100 OHM,5%,0.25W	01121	CB1015
A11A2R135	315-0101-00			RES.,FXD,CMPSN:100 OHM,5%,0.25W	01121	CB1015
A11A2R136	315-0472-00			RES.,FXD,CMPSN:4.7K OHM,5%,0.25W	01121	CB4725
A11A2R137	315-0101-00			RES.,FXD,CMPSN:100 OHM,5%,0.25W	01121	CB1015
A11A2R138	321-0761-03			RES.,FXD,FILM:35K OHM,0.25%,0.125W	91637	MFF1816D35001C
A11A2R215	315-0102-00			RES.,FXD,CMPSN:1K OHM,5%,0.25W	01121	CB1025
A11A2R216	315-0102-00			RES.,FXD,CMPSN:1K OHM,5%,0.25W	01121	CB1025
A11A2R217	315-0102-00			RES.,FXD,CMPSN:1K OHM,5%,0.25W	01121	CB1025
A11A2R221	315-0622-00			RES.,FXD,CMPSN:6.2K OHM,5%,0.25W	01121	CB6225
A11A2R222	315-0103-00			RES.,FXD,CMPSN:10K OHM,5%,0.25W	01121	CB1035
A11A2R223	315-0123-00			RES.,FXD,CMPSN:12K OHM,5%,0.25W	01121	CB1235
A11A2R224	315-0472-00			RES.,FXD,CMPSN:4.7K OHM,5%,0.25W	01121	CB4725
A11A2R225	315-0103-00			RES.,FXD,CMPSN:10K OHM,5%,0.25W	01121	CB1035
A11A2R226	315-0133-00			RES.,FXD,CMPSN:13K OHM,5%,0.25W	01121	CB1335
A11A2R227	315-0102-00			RES.,FXD,CMPSN:1K OHM,5%,0.25W	01121	CB1025
A11A2R228	315-0102-00			RES.,FXD,CMPSN:1K OHM,5%,0.25W	01121	CB1025
A11A2R229	315-0103-00			RES.,FXD,CMPSN:10K OHM,5%,0.25W	01121	CB1035
A11A2R230	315-0153-00			RES.,FXD,CMPSN:15K OHM,5%,0.25W	01121	CB1535
A11A2R231	321-0373-00			RES.,FXD,FILM:75K OHM, 1%,0.125W	91637	MFF1816G75001F
A11A2R232	321-0329-00			RES.,FXD,FILM:26.1K OHM,1%,0.125W	91637	MFF1816G26101F
A11A2R233	321-0394-00			RES.,FXD,FILM:124K OHM,1%,0.125W	91637	MFF1816G12402F
A11A2R234	315-0102-00			RES.,FXD,CMPSN:1K OHM,5%,0.25W	01121	CB1025
A11A2R235	315-0271-00			RES.,FXD,CMPSN:270 OHM,5%,0.25W	01121	CB2715
A11A2R236	315-0682-00			RES.,FXD,CMPSN:6.8K OHM,5%,0.25W	01121	CB6825

Component No.	Tektronix Part No.	Serial/Model No. Eff	Dscont	Name & Description	Mfr Code	Mfr Part Number
A11A2R238	315-0472-00			RES.,FXD,CMPSN:4.7K OHM,5%,0.25W	01121	CB4725
A11A2R313	315-0103-00			RES.,FXD,CMPSN:10K OHM,5%,0.25W	01121	CB1035
A11A2R314	315-0133-00			RES.,FXD,CMPSN:13K OHM,5%,0.25W	01121	CB1335
A11A2R315	315-0102-00			RES.,FXD,CMPSN:1K OHM,5%,0.25W	01121	CB1025
A11A2R316	315-0104-00			RES.,FXD,CMPSN:100K OHM,5%,0.25W	01121	CB1045
A11A2R319	315-0103-00			RES.,FXD,CMPSN:10K OHM,5%,0.25W	01121	CB1035
A11A2R319	----- -----			(BEGAN USAGE 670-6352-03 ONLY)		
A11A2R320	315-0102-00			RES.,FXD,CMPSN:1K OHM,5%,0.25W	01121	CB1025
A11A2R321	321-0203-00			RES.,FXD,FILM:1.27K OHM,1%,0.125W	91637	MFF1816G12700F
A11A2R322	321-0193-00			RES.,FXD,FILM:1K OHM,1%,0.125W	01121	ORD BY DESCR
A11A2R323	315-0512-00			RES.,FXD,CMPSN:5.1K OHM,5%,0.25W	01121	CB5125
A11A2R324	315-0103-00			RES.,FXD,CMPSN:10K OHM,5%,0.25W	01121	CB1035
A11A2R325	315-0106-00			RES.,FXD,CMPSN:10M OHM,5%,0.25W	01121	CB1065
A11A2R332	315-0104-00			RES.,FXD,CMPSN:100K OHM,5%,0.25W	01121	CB1045
A11A2R405	321-0434-00			RES.,FXD,FILM:324K OHM,1%,0.125W	91637	MFF1816G32402F
A11A2R406	315-0100-00			RES.,FXD,CMPSN:10 OHM,5%,0.25W	01121	CB1005
A11A2R407	315-0152-00			RES.,FXD,CMPSN:1.5K OHM,5%,0.25W	01121	CB1525
A11A2R410	315-0182-00			RES.,FXD,CMPSN:1.8K OHM,5%,0.25W	01121	CB1825
A11A2R413	321-0210-00			RES.,FXD,FILM:1.5K OHM,1%,0.125W	91637	MFF1816G15000F
A11A2R414	321-0132-00			RES.,FXD,FILM:232 OHM,1%,0.125W	91637	MFF1816G232R0F
A11A2R420	315-0272-00			RES.,FXD,CMPSN:2.7K OHM,5%,0.25W	01121	CB2725
A11A2R421	315-0103-00			RES.,FXD,CMPSN:10K OHM,5%,0.25W	01121	CB1035
A11A2R422	315-0681-00			RES.,FXD,CMPSN:680 OHM,5%,0.25W	01121	CB6815
A11A2R426	321-0270-00			RES.,FXD,FILM:6.34K OHM,1%,0.125W	91637	CMF55116G63400F
A11A2R427	321-0256-00			RES.,FXD,FILM:4.53K OHM,1%,0.125W	91637	MFF1816G45300F
A11A2R428	315-0514-00			RES.,FXD,CMPSN:510K OHM,5%,0.25W	01121	CB5145
A11A2R434	321-0291-00			RES.,FXD,FILM:10.5K OHM,1%,0.125W	91637	MFF1816G10501F
A11A2R435	321-0289-00			RES.,FXD,FILM:10K OHM,1%,0.125W	91637	MFF1816G10001F
A11A2R436	311-0633-00			RES.,VAR,NONWIR:5K OHM,10%,0.50W	73138	82-30-1
A11A2R437	315-0751-00			RES.,FXD,CMPSN:750 OHM,5%,0.25W	01121	CB7515
A11A2R507	315-0101-00			RES.,FXD,CMPSN:100 OHM,5%,0.25W	01121	CB1015
A11A2R508	315-0101-00			RES.,FXD,CMPSN:100 OHM,5%,0.25W	01121	CB1015
A11A2R509	315-0152-00			RES.,FXD,CMPSN:1.5K OHM,5%,0.25W	01121	CB1525
A11A2R510	315-0103-00			RES.,FXD,CMPSN:10K OHM,5%,0.25W	01121	CB1035
A11A2R521	315-0101-00			RES.,FXD,CMPSN:100 OHM,5%,0.25W	01121	CB1015
A11A2R522	315-0152-00			RES.,FXD,CMPSN:1.5K OHM,5%,0.25W	01121	CB1525
A11A2R528	315-0183-00			RES.,FXD,CMPSN:18K OHM,5%,0.25W	01121	CB1835
A11A2R529	315-0152-00			RES.,FXD,CMPSN:1.5K OHM,5%,0.25W	01121	CB1525
A11A2U124	156-0274-01			MICROCIRCUIT,DI:DUAL DIFF LINERCVR,SCRN	07263	9615
A11A2U215	156-0072-02			MICROCIRCUIT,DI:MONOSTABLE MV,BURN-IN	01295	SN74121
A11A2U217	156-0387-02	B010100	B010159	MICROCIRCUIT,DI:DUAL J-K FF,BURN IN	01295	SN74LS73
A11A2U217	156-0387-02	B010160		MICROCIRCUIT,DI:DUAL J-K FF,BURN IN	01295	SN74LS73
A11A2U321	156-0158-03			MICROCIRCUIT,LI:DUAL OPNL AMPL,CHK	80009	156-0158-03
A11A2U323	156-0936-00			MICROCIRCUIT,LI:OPERATIONAL AMPLIFIER	80009	156-0936-00
A11A2U332	156-1149-01			MICROCIRCUIT,LI:OPER AMPL,JFET,BURN-IN	27014	GLEA134/A+
A11A2U427	156-1126-01			MICROCIRCUIT,LI:VOLTAGE COMPARATOR,SEL	01295	LM311JG4
A11A2VR315	152-0395-00			SEMICOND DEVICE:ZENER,0.4W,4.3V,5%	14552	TD332317
A11A2VR335	152-0055-00			SEMICOND DEVICE:ZENER,0.4W,11V,5%	04713	SZG35009K1
A11A2VR335	----- -----			(BEGAN USAGE 670-6352-03 ONLY)		
A11A2VR413	152-0638-00			SEMICOND DEVICE:ZENER,0.4W,7V,5%	80009	152-0638-00
A11A2VR437	152-0212-00			SEMICOND DEVICE:ZENER,0.5W,9V,5%	04713	SZ50646RL

Component No.	Tektronix Part No.	Serial/Model No. Eff	Dscont	Name & Description	Mfr Code	Mfr Part Number
A12	672-1049-00			CRT SOCKET ASSY:	80009	672-1049-00
A12C212	290-0947-00	B010135		CAP.,FXD,ELCTLT:33UF,+50-10%,160V	55680	UHC2C330TFA
A12C305	285-1082-00			CAP.,FXD,PLSTC:0.47UF,20%,200V	14752	230B1C474
A12C317	285-1082-00			CAP.,FXD,PLSTC:0.47UF,20%,200V	14752	230B1C474
A12C329	285-1082-00			CAP.,FXD,PLSTC:0.47UF,20%,200V	14752	230B1C474
A12C409	290-0806-00			CAP.,FXD,ELCTLT:3.3UF,+75-10%,350VDC	55680	UHU2V3RTEA
A12C425	290-0806-00			CAP.,FXD,ELCTLT:3.3UF,+75-10%,350VDC	55680	UHU2V3RTEA
A12C437	290-0806-00			CAP.,FXD,ELCTLT:3.3UF,+75-10%,350VDC	55680	UHU2V3RTEA
A12E209	119-0181-00			ARSR,ELEC SURGE:230V,GAS FILLED	74276	CG230L
A12E225	119-0181-00			ARSR,ELEC SURGE:230V,GAS FILLED	74276	CG230L
A12E237	119-0181-00			ARSR,ELEC SURGE:230V,GAS FILLED	74276	CG230L
A12L105	108-0422-00			COIL,RF:FIXED,82UH	80009	108-0422-00
A12L115	108-0422-00			COIL,RF:FIXED,82UH	80009	108-0422-00
A12L129	108-0422-00			COIL,RF:FIXED,82UH	80009	108-0422-00
A12L409	114-0407-00			COIL,RF:VAR,1.9-4.5UH	80009	114-0407-00
A12L419	114-0407-00			COIL,RF:VAR,1.9-4.5UH	80009	114-0407-00
A12L445	114-0407-00			COIL,RF:VAR,1.9-4.5UH	80009	114-0407-00
A12R102	308-0836-00			RES.,FXD,WW:1.2 OHM,5%,1W,FUSIBLE	75042	BW-20F-1.2 OHM
A12R112	308-0836-00			RES.,FXD,WW:1.2 OHM,5%,1W,FUSIBLE	75042	BW-20F-1.2 OHM
A12R206	308-0834-00			RES.,FXD,WW:500 OHM,1%,13W	91637	NS105000R0F
A12R209	305-0201-00			RES.,FXD,CMPSN:200 OHM,5%,2W	01121	HB2015
A12R212	308-0836-00			RES.,FXD,WW:1.2 OHM,5%,1W,FUSIBLE	75042	BW-20F-1.2 OHM
A12R219	308-0834-00			RES.,FXD,WW:500 OHM,1%,13W	91637	NS105000R0F
A12R225	305-0201-00			RES.,FXD,CMPSN:200 OHM,5%,2W	01121	HB2015
A12R234	308-0834-00			RES.,FXD,WW:500 OHM,1%,13W	91637	NS105000R0F
A12R237	305-0201-00			RES.,FXD,CMPSN:200 OHM,5%,2W	01121	HB2015
A12R309	305-0101-02			RES.,FXD,CMPSN:100 OHM,5%,2W	01121	HB1015
A12R325	305-0101-02			RES.,FXD,CMPSN:100 OHM,5%,2W	01121	HB1015
A12R337	305-0101-02			RES.,FXD,CMPSN:100 OHM,5%,2W	01121	HB1015
A12R405	315-0434-00			RES.,FXD,CMPSN:430K OHM,5%,0.25W	01121	CB4345
A12R417	315-0434-00			RES.,FXD,CMPSN:430K OHM,5%,0.25W	01121	CB4345
A12R425	315-0434-00			RES.,FXD,CMPSN:430K OHM,5%,0.25W	01121	CB4345

Component No.	Tektronix Part No.	Serial/Model No. Eff	Dscont	Name & Description	Mfr Code	Mfr Part Number
A13	672-0875-02	B010100	B010379	MODULE ASSY:VIDEO AMPL	80009	672-0875-02
A13	672-0875-03	B010380		CKT BOARD ASSY:VIDEO AMPL	80009	672-0875-03
A13E290	276-0541-00			SHIELDING BEAD,:	80009	276-0541-00
A13E490	276-0541-00			SHIELDING BEAD,:	80009	276-0541-00
A13E690	276-0541-00			SHIELDING BEAD,:	80009	276-0541-00
A13A1	670-6355-02	B010100	B010379	CKT BOARD ASSY:VIDEO AMPL	80009	670-6355-02
A13A1	670-6355-03	B010138		CKT BOARD ASSY:VIDEO AMPL	80009	670-6355-03
A13A1C105	290-0804-00			CAP.,FXD,ELCTLT:10UF,+50-10%,25V	55680	ULA1E100TEA
A13A1C106	290-0804-00			CAP.,FXD,ELCTLT:10UF,+50-10%,25V	55680	ULA1E100TEA
A13A1C107	290-0942-00			CAP.,FXD.ELCTLT:100UF,+100-10%,25V	56289	672D107H025CG2C
A13A1C108	290-0942-00			CAP.,FXD.ELCTLT:100UF,+100-10%,25V	56289	672D107H025CG2C
A13A1C110	290-0942-00			CAP.,FXD.ELCTLT:100UF,+100-10%,25V	56289	672D107H025CG2C
A13A1C115	290-0800-00			CAP.,FXD,ELCTLT:250UF,+100-10%,20V	56289	672D257H0200M5C
A13A1C121	281-0773-00			CAP.,FXD,CER DI:0.1UF,20%,50V	04222	MA205E104MAA
A13A1C130	283-0059-00			CAP.,FXD,CER DI:1UF,+80-20%,50V	51642	400050Z5U105Z
A13A1C134	281-0775-00			CAP.,FXD,CER DI:0.1UF,20%,50V	04222	MA205E104MAA
A13A1C142	283-0017-00	B010100	B010134	CAP.,FXD,CER DI:1UF,+80-20%,3V	T0679	RT31052-H
A13A1C142	283-0059-00	B010135		CAP.,FXD,CER DI:1UF,+80-20%,50V	51642	400050Z5U105Z
A13A1C145	281-0775-00			CAP.,FXD,CER DI:0.1UF,20%,50V	04222	MA205E104MAA
A13A1C147	281-0810-00			CAP.,FXD,CER DI:5.6PF,0.5%,100V	04222	GC10-1A5R6D
A13A1C150	283-0017-00	B010100	B010134	CAP.,FXD,CER DI:1UF,+80-20%,3V	T0679	RT31052-H
A13A1C150	283-0059-00	B010135		CAP.,FXD,CER DI:1UF,+80-20%,50V	51642	400050Z5U105Z
A13A1C160	281-0791-00			CAP.,FXD,CER DI:270PF,10%,100V	04222	MA101A271KAA
A13A1C164	285-0629-00			CAP.,FXD,PLSTC:0.047UF,20%,100V	56289	192P47302
A13A1C173	283-0059-00			CAP.,FXD,CER DI:1UF,+80-20%,50V	51642	400050Z5U105Z
A13A1C179	283-0168-00	B010131		CAP.,FXD,CER DI:12PF,5%,100V	72982	8101B121C0G0120J
A13A1C180	283-0185-00	B010131		CAP.,FXD,CER DI:2.5PF,5%,50V	72982	8101B057C0K0295B
A13A1C184	281-0773-00			CAP.,FXD,CER DI:0.1UF,20%,50V	04222	MA205E104MAA
A13A1C187	281-0775-00			CAP.,FXD,CER DI:0.1UF,20%,50V	04222	MA205E104MAA
A13A1C188	283-0600-00	B010131		CAP.,FXD,MICA D:43PF,5%,500V	00853	D105E430J0
A13A1C205	290-0939-00			CAP.,FXD,ELCTLT:10UF,+100-10%,100V	56289	672D106H100CG2C
A13A1C209	290-0779-00			CAP.,FXD,ELCTLT:10UF,+50-10%,50VDC	56289	502D237
A13A1C216	290-0758-00			CAP.,FXD,ELCTLT:2.2UF,+50-10%,160V	56289	502D227
A13A1C239	281-0773-00			CAP.,FXD,CER DI:0.1UF,20%,50V	04222	MA205E104MAA
A13A1C240	281-0773-00			CAP.,FXD,CER DI:0.1UF,20%,50V	04222	MA205E104MAA
A13A1C241	281-0773-00			CAP.,FXD,CER DI:0.1UF,20%,50V	04222	MA205E104MAA
A13A1C251	281-0773-00			CAP.,FXD,CER DI:0.1UF,20%,50V	04222	MA205E104MAA
A13A1C254	281-0773-00			CAP.,FXD,CER DI:0.1UF,20%,50V	04222	MA205E104MAA
A13A1C264	285-1082-00			CAP.,FXD,PLSTC:0.47UF,20%,200V	14752	230B1C474
A13A1C265	281-0500-00			CAP.,FXD,CER DI:2.2PF,+/-0.5PF,500V	59660	0301-080-C0J0
A13A1C266	281-0773-00			CAP.,FXD,CER DI:0.1UF,20%,50V	04222	MA205E104MAA
A13A1C275	281-0773-00			CAP.,FXD,CER DI:0.1UF,20%,50V	04222	MA205E104MAA
A13A1C281	281-0773-00			CAP.,FXD,CER DI:0.1UF,20%,50V	04222	MA205E104MAA
A13A1C292	285-1050-00			CAP.,FXD,PLSTC:0.1UF,1%,200V	14752	230B1C104F
A13A1C308	281-0775-00			CAP.,FXD,CER DI:0.1UF,20%,50V	04222	MA205E104MAA
A13A1C312	281-0775-00			CAP.,FXD,CER DI:0.1UF,20%,50V	04222	MA205E104MAA
A13A1C325	283-0059-00			CAP.,FXD,CER DI:1UF,+80-20%,50V	51642	400050Z5U105Z
A13A1C327	281-0773-00			CAP.,FXD,CER DI:0.1UF,20%,50V	04222	MA205E104MAA
A13A1C337	281-0775-00			CAP.,FXD,CER DI:0.1UF,20%,50V	04222	MA205E104MAA
A13A1C342	283-0017-00	B010100	B010134	CAP.,FXD,CER DI:1UF,+80-20%,3V	T0679	RT31052-H
A13A1C342	283-0059-00	B010135		CAP.,FXD,CER DI:1UF,+80-20%,50V	51642	400050Z5U105Z
A13A1C345	281-0775-00			CAP.,FXD,CER DI:0.1UF,20%,50V	04222	MA205E104MAA

Component No.	Tektronix Part No.	Serial/Model No. Eff	Dscont	Name & Description	Mfr Code	Mfr Part Number
A13A1C347	281-0810-00			CAP.,FXD,CER DI:5.6PF,0.5%,100V	04222	GC10-1A5R6D
A13A1C351	283-0017-00	B010100	B010134	CAP.,FXD,CER DI:1UF,+80-20%,3V	T0679	RT31052-H
A13A1C351	283-0059-00	B010135		CAP.,FXD,CER DI:1UF,+80-20%,50V	51642	RT31052-H
A13A1C364	285-0629-00			CAP.,FXD,PLSTC:0.047UF,20%,100V	56289	192P47302
A13A1C373	283-0059-00			CAP.,FXD,CER DI:1UF,+80-20%,50V	51642	400050Z5U105Z
A13A1C379	283-0168-00	B010131		CAP.,FXD,CER DI:12PF,5%,100V	72982	8101B121C0G0120J
A13A1C380	283-0185-00	B010131		CAP.,FXD,CER DI:2.5PF,5%,50V	72982	8101B057C0K0295B
A13A1C383	281-0773-00			CAP.,FXD,CER DI:0.1UF,20%,50V	04222	MA205E104MAA
A13A1C386	281-0775-00			CAP.,FXD,CER DI:0.1UF,20%,50V	04222	MA205E104MAA
A13A1C388	283-0600-00	B010131		CAP.,FXD,MICA D:43PF,5%,500V	00853	D105E430J0
A13A1C408	281-0809-00			CAP.,FXD,CER DI:200PF,5%,100V	04222	GC101A201J
A13A1C417	281-0812-00			CAP.,FXD,CER DI:1000PF,10%,100V	04222	MA101C102KAA
A13A1C436	281-0773-00			CAP.,FXD,CER DI:0.1UF,20%,50V	04222	MA205E104MAA
A13A1C437	281-0773-00			CAP.,FXD,CER DI:0.1UF,20%,50V	04222	MA205E104MAA
A13A1C440	281-0773-00			CAP.,FXD,CER DI:0.1UF,20%,50V	04222	MA205E104MAA
A13A1C447	281-0773-00			CAP.,FXD,CER DI:0.1UF,20%,50V	04222	MA205E104MAA
A13A1C450	281-0773-00			CAP.,FXD,CER DI:0.1UF,20%,50V	04222	MA205E104MAA
A13A1C453	281-0773-00			CAP.,FXD,CER DI:0.1UF,20%,50V	04222	MA205E104MAA
A13A1C462	285-1082-00			CAP.,FXD,PLSTC:0.47UF,20%,200V	14752	230B1C474
A13A1C463	281-0500-00			CAP.,FXD,CER DI:2.2PF,+/-0.5PF,500V	59660	0301-080-C0J0
A13A1C476	281-0773-00			CAP.,FXD,CER DI:0.1UF,20%,50V	04222	MA205E104MAA
A13A1C481	281-0773-00			CAP.,FXD,CER DI:0.1UF,20%,50V	04222	MA205E104MAA
A13A1C492	285-1050-00			CAP.,FXD,PLSTC:0.1UF,1%,200V	14752	230B1C104F
A13A1C505	281-0809-00			CAP.,FXD,CER DI:200PF,5%,100V	04222	GC101A201J
A13A1C508	281-0814-00			CAP.,FXD,CER DI:100PF,10%,100V	04222	GC101A101K
A13A1C516	281-0791-00			CAP.,FXD,CER DI:270PF,10%,100V	04222	MA101A271KAA
A13A1C517	281-0823-00			CAP.,FXD,CER DI:470PF,10%,50V	12969	CGB471KDN
A13A1C524	283-0059-00			CAP.,FXD,CER DI:1UF,+80-20%,50V	51642	400050Z5U105Z
A13A1C525	281-0773-00			CAP.,FXD,CER DI:0.1UF,20%,50V	04222	MA205E104MAA
A13A1C533	281-0775-00			CAP.,FXD,CER DI:0.1UF,20%,50V	04222	MA205E104MAA
A13A1C541	283-0017-00	B010100	B010134	CAP.,FXD,CER DI:1UF,+80-20%,3V	T0679	RT31052-H
A13A1C541	283-0059-00	B010135		CAP.,FXD,CER DI:1UF,+80-20%,50V	51642	400050Z5U105Z
A13A1C546	281-0775-00			CAP.,FXD,CER DI:0.1UF,20%,50V	04222	MA205E104MAA
A13A1C547	281-0773-00			CAP.,FXD,CER DI:0.1UF,20%,50V	04222	MA205E104MAA
A13A1C551	281-0810-00			CAP.,FXD,CER DI:5.6PF,0.5%,100V	04222	GC10-1A5R6D
A13A1C552	283-0017-00	B010100	B010134	CAP.,FXD,CER DI:1UF,+80-20%,3V	T0679	RT31052-H
A13A1C552	283-0059-00	B010135		CAP.,FXD,CER DI:1UF,+80-20%,50V	51642	400050Z5U105Z
A13A1C556	281-0773-00			CAP.,FXD,CER DI:0.1UF,20%,50V	04222	MA205E104MAA
A13A1C561	281-0791-00			CAP.,FXD,CER DI:270PF,10%,100V	04222	MA101A271KAA
A13A1C566	285-0629-00			CAP.,FXD,PLSTC:0.047UF,20%,100V	56289	192P47302
A13A1C575	283-0059-00			CAP.,FXD,CER DI:1UF,+80-20%,50V	51642	400050Z5U105Z
A13A1C576	281-0500-00			CAP.,FXD,CER DI:2.2PF,+/-0.5PF,500V	59660	0301-080-C0J0
A13A1C579	283-0168-00	B010131		CAP.,FXD,CER DI:12PF,5%,100V	72982	8101B121C0G0120J
A13A1C580	283-0185-00	B010131		CAP.,FXD,CER DI:2.5PF,5%,50V	72982	8101B057C0K0295B
A13A1C583	281-0773-00			CAP.,FXD,CER DI:0.1UF,20%,50V	04222	MA205E104MAA
A13A1C586	281-0775-00			CAP.,FXD,CER DI:0.1UF,20%,50V	04222	MA205E104MAA
A13A1C588	283-0600-00	B010131		CAP.,FXD,MICA D:43PF,5%,500V	00853	D105E430J0
A13A1C602	283-0268-00			CAP.,FXD,CER DI:0.015UF,10%,50V	56289	1C20X7R153K050B
A13A1C636	281-0773-00			CAP.,FXD,CER DI:0.1UF,20%,50V	04222	MA205E104MAA
A13A1C640	281-0773-00			CAP.,FXD,CER DI:0.1UF,20%,50V	04222	MA205E104MAA
A13A1C650	281-0773-00			CAP.,FXD,CER DI:0.1UF,20%,50V	04222	MA205E104MAA
A13A1C665	285-1082-00			CAP.,FXD,PLSTC:0.47UF,20%,200V	14752	230B1C474
A13A1C667	281-0773-00			CAP.,FXD,CER DI:0.1UF,20%,50V	04222	MA205E104MAA

Component No.	Tektronix Part No.	Serial/Model No. Eff	Dscont	Name & Description	Mfr Code	Mfr Part Number
A13A1C672	281-0773-00			CAP.,FXD,CER DI:0.1UF,20%,50V	04222	MA205E104MAA
A13A1C681	281-0773-00			CAP.,FXD,CER DI:0.1UF,20%,50V	04222	MA205E104MAA
A13A1C692	285-1050-00			CAP.,FXD,PLSTC:0.1UF,1%,200V	14752	230B1C104F
A13A1CR123	152-0141-02			SEMICOND DVC,DI:SW,SI,30V,150MA,30V,DO-35	01295	1N4152R
A13A1CR139	152-0141-02			SEMICOND DVC,DI:SW,SI,30V,150MA,30V,DO-35	01295	1N4152R
A13A1CR140	152-0141-02			SEMICOND DVC,DI:SW,SI,30V,150MA,30V,DO-35	01295	1N4152R
A13A1CR150	152-0141-02			SEMICOND DVC,DI:SW,SI,30V,150MA,30V,DO-35	01295	1N4152R
A13A1CR151	152-0141-02			SEMICOND DVC,DI:SW,SI,30V,150MA,30V,DO-35	01295	1N4152R
A13A1CR152	152-0141-02			SEMICOND DVC,DI:SW,SI,30V,150MA,30V,DO-35	01295	1N4152R
A13A1CR160	152-0141-02			SEMICOND DVC,DI:SW,SI,30V,150MA,30V,DO-35	01295	1N4152R
A13A1CR161	152-0141-02			SEMICOND DVC,DI:SW,SI,30V,150MA,30V,DO-35	01295	1N4152R
A13A1CR185	152-0141-02			SEMICOND DVC,DI:SW,SI,30V,150MA,30V,DO-35	01295	1N4152R
A13A1CR186	152-0141-02			SEMICOND DVC,DI:SW,SI,30V,150MA,30V,DO-35	01295	1N4152R
A13A1CR191	152-0141-02			SEMICOND DVC,DI:SW,SI,30V,150MA,30V,DO-35	01295	1N4152R
A13A1CR229	152-0141-02			SEMICOND DVC,DI:SW,SI,30V,150MA,30V,DO-35	01295	1N4152R
A13A1CR230	152-0141-02			SEMICOND DVC,DI:SW,SI,30V,150MA,30V,DO-35	01295	1N4152R
A13A1CR231	152-0141-02			SEMICOND DVC,DI:SW,SI,30V,150MA,30V,DO-35	01295	1N4152R
A13A1CR232	152-0141-02			SEMICOND DVC,DI:SW,SI,30V,150MA,30V,DO-35	01295	1N4152R
A13A1CR233	152-0141-02			SEMICOND DVC,DI:SW,SI,30V,150MA,30V,DO-35	01295	1N4152R
A13A1CR234	152-0141-02			SEMICOND DVC,DI:SW,SI,30V,150MA,30V,DO-35	01295	1N4152R
A13A1CR250	152-0141-02			SEMICOND DVC,DI:SW,SI,30V,150MA,30V,DO-35	01295	1N4152R
A13A1CR252	152-0141-02			SEMICOND DVC,DI:SW,SI,30V,150MA,30V,DO-35	01295	1N4152R
A13A1CR254	152-0141-02			SEMICOND DVC,DI:SW,SI,30V,150MA,30V,DO-35	01295	1N4152R
A13A1CR255	152-0141-02			SEMICOND DVC,DI:SW,SI,30V,150MA,30V,DO-35	01295	1N4152R
A13A1CR274	152-0242-00			SEMICOND DVC:SIG,SI,225V,0.2A,D0-7	07263	FDH5004
A13A1CR275	152-0242-00			SEMICOND DVC:SIG,SI,225V,0.2A,D0-7	07263	FDH5004
A13A1CR277	152-0141-02			SEMICOND DVC,DI:SW,SI,30V,150MA,30V,DO-35	01295	1N4152R
A13A1CR281	152-0141-02			SEMICOND DVC,DI:SW,SI,30V,150MA,30V,DO-35	01295	1N4152R
A13A1CR282	152-0141-02			SEMICOND DVC,DI:SW,SI,30V,150MA,30V,DO-35	01295	1N4152R
A13A1CR293	152-0242-00			SEMICOND DVC:SIG,SI,225V,0.2A,D0-7	07263	FDH5004
A13A1CR294	152-0242-00			SEMICOND DVC:SIG,SI,225V,0.2A,D0-7	07263	FDH5004
A13A1CR335	152-0141-02			SEMICOND DVC,DI:SW,SI,30V,150MA,30V,DO-35	01295	1N4152R
A13A1CR336	152-0141-02			SEMICOND DVC,DI:SW,SI,30V,150MA,30V,DO-35	01295	1N4152R
A13A1CR351	152-0141-02			SEMICOND DVC,DI:SW,SI,30V,150MA,30V,DO-35	01295	1N4152R
A13A1CR352	152-0141-02			SEMICOND DVC,DI:SW,SI,30V,150MA,30V,DO-35	01295	1N4152R
A13A1CR353	152-0141-02			SEMICOND DVC,DI:SW,SI,30V,150MA,30V,DO-35	01295	1N4152R
A13A1CR360	152-0141-02			SEMICOND DVC,DI:SW,SI,30V,150MA,30V,DO-35	01295	1N4152R
A13A1CR361	152-0141-02			SEMICOND DVC,DI:SW,SI,30V,150MA,30V,DO-35	01295	1N4152R
A13A1CR385	152-0141-02			SEMICOND DVC,DI:SW,SI,30V,150MA,30V,DO-35	01295	1N4152R
A13A1CR386	152-0141-02			SEMICOND DVC,DI:SW,SI,30V,150MA,30V,DO-35	01295	1N4152R
A13A1CR391	152-0141-02			SEMICOND DVC,DI:SW,SI,30V,150MA,30V,DO-35	01295	1N4152R
A13A1CR402	152-0141-02			SEMICOND DVC,DI:SW,SI,30V,150MA,30V,DO-35	01295	1N4152R
A13A1CR415	152-0141-02			SEMICOND DVC,DI:SW,SI,30V,150MA,30V,DO-35	01295	1N4152R
A13A1CR422	152-0141-02			SEMICOND DVC,DI:SW,SI,30V,150MA,30V,DO-35	01295	1N4152R
A13A1CR423	152-0141-02			SEMICOND DVC,DI:SW,SI,30V,150MA,30V,DO-35	01295	1N4152R
A13A1CR424	152-0141-02			SEMICOND DVC,DI:SW,SI,30V,150MA,30V,DO-35	01295	1N4152R
A13A1CR425	152-0141-02			SEMICOND DVC,DI:SW,SI,30V,150MA,30V,DO-35	01295	1N4152R
A13A1CR438	152-0141-02			SEMICOND DVC,DI:SW,SI,30V,150MA,30V,DO-35	01295	1N4152R
A13A1CR439	152-0141-02			SEMICOND DVC,DI:SW,SI,30V,150MA,30V,DO-35	01295	1N4152R
A13A1CR450	152-0141-02			SEMICOND DVC,DI:SW,SI,30V,150MA,30V,DO-35	01295	1N4152R
A13A1CR451	152-0141-02			SEMICOND DVC,DI:SW,SI,30V,150MA,30V,DO-35	01295	1N4152R
A13A1CR453	152-0141-02			SEMICOND DVC,DI:SW,SI,30V,150MA,30V,DO-35	01295	1N4152R
A13A1CR454	152-0141-02			SEMICOND DVC,DI:SW,SI,30V,150MA,30V,DO-35	01295	1N4152R
A13A1CR474	152-0242-00			SEMICOND DVC:SIG,SI,225V,0.2A,D0-7	07263	FDH5004

Component No.	Tektronix Part No.	Serial/Model No. Eff	Dscont	Name & Description	Mfr Code	Mfr Part Number
A13A1CR475	152-0242-00			SEMICOND DVC:SIG,SI,225V,0.2A,D0-7	07263	FDH5004
A13A1CR477	152-0141-02			SEMICOND DVC,DI:SW,SI,30V,150MA,30V,DO-35	01295	1N4152R
A13A1CR481	152-0141-02			SEMICOND DVC,DI:SW,SI,30V,150MA,30V,DO-35	01295	1N4152R
A13A1CR482	152-0141-02			SEMICOND DVC,DI:SW,SI,30V,150MA,30V,DO-35	01295	1N4152R
A13A1CR493	152-0242-00			SEMICOND DVC:SIG,SI,225V,0.2A,D0-7	07263	FDH5004
A13A1CR494	152-0242-00			SEMICOND DVC:SIG,SI,225V,0.2A,D0-7	07263	FDH5004
A13A1CR519	152-0141-02			SEMICOND DVC,DI:SW,SI,30V,150MA,30V,DO-35	01295	1N4152R
A13A1CR535	152-0141-02			SEMICOND DVC,DI:SW,SI,30V,150MA,30V,DO-35	01295	1N4152R
A13A1CR536	152-0141-02			SEMICOND DVC,DI:SW,SI,30V,150MA,30V,DO-35	01295	1N4152R
A13A1CR537	152-0141-02			SEMICOND DVC,DI:SW,SI,30V,150MA,30V,DO-35	01295	1N4152R
A13A1CR539	152-0141-02			SEMICOND DVC,DI:SW,SI,30V,150MA,30V,DO-35	01295	1N4152R
A13A1CR551	152-0141-02			SEMICOND DVC,DI:SW,SI,30V,150MA,30V,DO-35	01295	1N4152R
A13A1CR552	152-0141-02			SEMICOND DVC,DI:SW,SI,30V,150MA,30V,DO-35	01295	1N4152R
A13A1CR553	152-0141-02			SEMICOND DVC,DI:SW,SI,30V,150MA,30V,DO-35	01295	1N4152R
A13A1CR556	152-0141-02			SEMICOND DVC,DI:SW,SI,30V,150MA,30V,DO-35	01295	1N4152R
A13A1CR561	152-0141-02			SEMICOND DVC,DI:SW,SI,30V,150MA,30V,DO-35	01295	1N4152R
A13A1CR562	152-0141-02			SEMICOND DVC,DI:SW,SI,30V,150MA,30V,DO-35	01295	1N4152R
A13A1CR579	152-0141-02			SEMICOND DVC,DI:SW,SI,30V,150MA,30V,DO-35	01295	1N4152R
A13A1CR585	152-0141-02			SEMICOND DVC,DI:SW,SI,30V,150MA,30V,DO-35	01295	1N4152R
A13A1CR586	152-0141-02			SEMICOND DVC,DI:SW,SI,30V,150MA,30V,DO-35	01295	1N4152R
A13A1CR591	152-0141-02			SEMICOND DVC,DI:SW,SI,30V,150MA,30V,DO-35	01295	1N4152R
A13A1CR604	152-0141-02			SEMICOND DVC,DI:SW,SI,30V,150MA,30V,DO-35	01295	1N4152R
A13A1CR614	152-0141-02			SEMICOND DVC,DI:SW,SI,30V,150MA,30V,DO-35	01295	1N4152R
A13A1CR616	152-0141-02			SEMICOND DVC,DI:SW,SI,30V,150MA,30V,DO-35	01295	1N4152R
A13A1CR617	152-0141-02			SEMICOND DVC,DI:SW,SI,30V,150MA,30V,DO-35	01295	1N4152R
A13A1CR618	152-0141-02			SEMICOND DVC,DI:SW,SI,30V,150MA,30V,DO-35	01295	1N4152R
A13A1CR623	152-0141-02			SEMICOND DVC,DI:SW,SI,30V,150MA,30V,DO-35	01295	1N4152R
A13A1CR624	152-0141-02			SEMICOND DVC,DI:SW,SI,30V,150MA,30V,DO-35	01295	1N4152R
A13A1CR625	152-0141-02			SEMICOND DVC,DI:SW,SI,30V,150MA,30V,DO-35	01295	1N4152R
A13A1CR626	152-0141-02			SEMICOND DVC,DI:SW,SI,30V,150MA,30V,DO-35	01295	1N4152R
A13A1CR650	152-0141-02			SEMICOND DVC,DI:SW,SI,30V,150MA,30V,DO-35	01295	1N4152R
A13A1CR651	152-0141-02			SEMICOND DVC,DI:SW,SI,30V,150MA,30V,DO-35	01295	1N4152R
A13A1CR652	152-0141-02			SEMICOND DVC,DI:SW,SI,30V,150MA,30V,DO-35	01295	1N4152R
A13A1CR671	152-0242-00			SEMICOND DVC:SIG,SI,225V,0.2A,D0-7	07263	FDH5004
A13A1CR672	152-0242-00			SEMICOND DVC:SIG,SI,225V,0.2A,D0-7	07263	FDH5004
A13A1CR681	152-0141-02			SEMICOND DVC,DI:SW,SI,30V,150MA,30V,DO-35	01295	1N4152R
A13A1CR682	152-0141-02			SEMICOND DVC,DI:SW,SI,30V,150MA,30V,DO-35	01295	1N4152R
A13A1CR694	152-0242-00			SEMICOND DVC:SIG,SI,225V,0.2A,D0-7	07263	FDH5004
A13A1CR695	152-0242-00			SEMICOND DVC:SIG,SI,225V,0.2A,D0-7	07263	FDH5004
A13A1L173	114-0220-00			COIL,RF:1-3UH,CORE 276-0568-00	80009	114-0220-00
A13A1L304	108-0422-00			COIL,RF:FIXED,82UH	80009	108-0422-00
A13A1L373	114-0220-00			COIL,RF:1-3UH,CORE 276-0568-00	80009	114-0220-00
A13A1L573	114-0220-00			COIL,RF:1-3UH,CORE 276-0568-00	80009	114-0220-00
A13A1Q131	151-0302-01			TRANSISTOR:SILICON,NPN,SEL	80009	151-0302-01
A13A1Q136	151-0302-01			TRANSISTOR:SILICON,NPN,SEL	80009	151-0302-01
A13A1Q137	151-0302-01			TRANSISTOR:SILICON,NPN,SEL	80009	151-0302-01
A13A1Q138	151-0459-01			TRANSISTOR:SILICON,PNP	80009	151-0459-01
A13A1Q147	151-0254-00			TRANSISTOR:SILICON,NPN	03508	X38L3118
A13A1Q148	151-0459-01			TRANSISTOR:SILICON,PNP	80009	151-0459-01
A13A1Q149	151-1021-00			TRANSISTOR:SILICON,JFE	17856	FN815
A13A1Q150	151-0192-03			TRANSISTOR:SILICON,NPN	80009	151-0192-03
A13A1Q155	151-0230-00			TRANSISTOR:SILICON,NPN	01295	SAC6176
A13A1Q156	151-0230-00			TRANSISTOR:SILICON,NPN	01295	SAC6176
A13A1Q157	151-0230-00			TRANSISTOR:SILICON,NPN	01295	SAC6176

Component No.	Tektronix Part No.	Serial/Model No. Eff	Dscont	Name & Description	Mfr Code	Mfr Part Number
A13A1Q159	151-0109-00			TRANSISTOR:SILICON,NPN	80009	151-0109-00
A13A1Q162	151-0280-01			TRANSISTOR:SILICON,PNP,SEL	04713	ST1390H
A13A1Q163	151-0254-00			TRANSISTOR:SILICON,NPN	03508	X38L3118
A13A1Q173	151-0302-01			TRANSISTOR:SILICON,NPN,SEL	80009	151-0302-01
A13A1Q181	151-0441-00			TRANSISTOR:SILICON,NPN	04713	SRF501
A13A1Q182	151-0434-02	B010100	B010130	TRANSISTOR:SS7144,SELECTED	80009	151-0434-02
A13A1Q182	151-0271-00	B010131		TRANSISTOR:SILICON,PNP	04713	SPS8236
A13A1Q230	151-0459-01			TRANSISTOR:SILICON,PNP	80009	151-0459-01
A13A1Q246	151-0127-04			TRANSISTOR:SILICON,NPN,PRESTRESSED	80009	151-0127-04
A13A1Q247	151-0192-03			TRANSISTOR:SILICON,NPN	80009	151-0192-03
A13A1Q251	151-0254-00			TRANSISTOR:SILICON,NPN	03508	X38L3118
A13A1Q281	151-0254-00			TRANSISTOR:SILICON,NPN	03508	X38L3118
A13A1Q291	151-1143-00	B010100	B010130	TRANSISTOR:FE,N-CHANNEL,SI,TO-117	80009	151-1143-00
A13A1Q291	151-1143-01	B010131		TRANSISTOR:FE,N-CHANNEL,SI,SCRN	80009	151-1143-01
A13A1Q325	151-0302-01			TRANSISTOR:SILICON,NPN,SEL	80009	151-0302-01
A13A1Q330	151-0302-01			TRANSISTOR:SILICON,NPN,SEL	80009	151-0302-01
A13A1Q337	151-0459-01			TRANSISTOR:SILICON,PNP	80009	151-0459-01
A13A1Q338	151-0302-01			TRANSISTOR:SILICON,NPN,SEL	80009	151-0302-01
A13A1Q339	151-0302-01			TRANSISTOR:SILICON,NPN,SEL	80009	151-0302-01
A13A1Q347	151-0254-00			TRANSISTOR:SILICON,NPN	03508	X38L3118
A13A1Q348	151-0459-01			TRANSISTOR:SILICON,PNP	80009	151-0459-01
A13A1Q349	151-1021-00			TRANSISTOR:SILICON,JFE	17856	FN815
A13A1Q350	151-0192-03			TRANSISTOR:SILICON,NPN	80009	151-0192-03
A13A1Q355	151-0230-00			TRANSISTOR:SILICON,NPN	01295	SAC6176
A13A1Q356	151-0230-00			TRANSISTOR:SILICON,NPN	01295	SAC6176
A13A1Q357	151-0230-00			TRANSISTOR:SILICON,NPN	01295	SAC6176
A13A1Q358	151-0109-00			TRANSISTOR:SILICON,NPN	80009	151-0109-00
A13A1Q362	151-0280-01			TRANSISTOR:SILICON,PNP,SEL	04713	ST1390H
A13A1Q363	151-0254-00			TRANSISTOR:SILICON,NPN	03508	X38L3118
A13A1Q373	151-0302-01			TRANSISTOR:SILICON,NPN,SEL	80009	151-0302-01
A13A1Q381	151-0441-00			TRANSISTOR:SILICON,NPN	04713	SRF501
A13A1Q382	151-0434-02	B010100	B010130	TRANSISTOR:SS7144,SELECTED	80009	151-0434-02
A13A1Q382	151-0271-00	B010131		TRANSISTOR:SILICON,PNP	04713	SPS8236
A13A1Q400	151-0301-02			TRANSISTOR:SILICON,PNP	04713	2N2907A
A13A1Q408	151-0459-01			TRANSISTOR:SILICON,PNP	80009	151-0459-01
A13A1Q409	151-0459-01			TRANSISTOR:SILICON,PNP	80009	151-0459-01
A13A1Q431	151-0459-01			TRANSISTOR:SILICON,PNP	80009	151-0459-01
A13A1Q445	151-0127-04			TRANSISTOR:SILICON,NPN,PRESTRESSED	80009	151-0127-04
A13A1Q446	151-0192-03			TRANSISTOR:SILICON,NPN	80009	151-0192-03
A13A1Q450	151-0254-00			TRANSISTOR:SILICON,NPN	03508	X38L3118
A13A1Q481	151-0254-00			TRANSISTOR:SILICON,NPN	03508	X38L3118
A13A1Q491	151-1143-00	B010100	B010130	TRANSISTOR:FE,N-CHANNEL,SI,TO-117	80009	151-1143-00
A13A1Q491	151-1143-01	B010131		TRANSISTOR:FE,N-CHANNEL,SI,SCRN	80009	151-1143-01
A13A1Q524	151-0302-01			TRANSISTOR:SILICON,NPN,SEL	80009	151-0302-01
A13A1Q537	151-0302-01			TRANSISTOR:SILICON,NPN,SEL	80009	151-0302-01
A13A1Q538	151-0459-01			TRANSISTOR:SILICON,PNP	80009	151-0459-01
A13A1Q539	151-0302-01			TRANSISTOR:SILICON,NPN,SEL	80009	151-0302-01
A13A1Q542	151-0254-00			TRANSISTOR:SILICON,NPN	03508	X38L3118
A13A1Q543	151-0459-01			TRANSISTOR:SILICON,PNP	80009	151-0459-01
A13A1Q544	151-1021-00			TRANSISTOR:SILICON,JFE	17856	FN815
A13A1Q545	151-0192-03			TRANSISTOR:SILICON,NPN	80009	151-0192-03
A13A1Q546	151-0127-04			TRANSISTOR:SILICON,NPN,PRESTRESSED	80009	151-0127-04
A13A1Q551	151-0254-00			TRANSISTOR:SILICON,NPN	03508	X38L3118
A13A1Q552	151-0230-00			TRANSISTOR:SILICON,NPN	01295	SAC6176

Component No.	Tektronix Part No.	Serial/Model No. Eff	Dscont	Name & Description	Mfr Code	Mfr Part Number
A13A1Q553	151-0230-00			TRANSISTOR:SILICON,NPN	01295	SAC6176
A13A1Q554	151-0230-00			TRANSISTOR:SILICON,NPN	01295	SAC6176
A13A1Q562	151-0280-01			TRANSISTOR:SILICON,PNP,SEL	04713	ST1390H
A13A1Q564	151-0109-00			TRANSISTOR:SILICON,NPN	80009	151-0109-00
A13A1Q565	151-0254-00			TRANSISTOR:SILICON,NPN	03508	X38L3118
A13A1Q575	151-0302-01			TRANSISTOR:SILICON,NPN,SEL	80009	151-0302-01
A13A1Q581	151-0434-02	B010100	B010130	TRANSISTOR:SS7144,SELECTED	80009	151-0434-02
A13A1Q581	151-0271-00	B010131		TRANSISTOR:SILICON,PNP	04713	SPS8236
A13A1Q582	151-0441-00			TRANSISTOR:SILICON,NPN	04713	SRF501
A13A1Q608	151-0459-01			TRANSISTOR:SILICON,PNP	80009	151-0459-01
A13A1Q635	151-0459-01			TRANSISTOR:SILICON,PNP	80009	151-0459-01
A13A1Q643	151-0192-03			TRANSISTOR:SILICON,NPN	80009	151-0192-03
A13A1Q681	151-0254-00			TRANSISTOR:SILICON,NPN	03508	X38L3118
A13A1Q691	151-1143-00	B010100	B010130	TRANSISTOR:FE,N-CHANNEL,SI,TO-117	80009	151-1143-00
A13A1Q691	151-1143-01	B010131		TRANSISTOR:FE,N-CHANNEL,SI,SCRN	80009	151-1143-01
A13A1R119	311-0607-00			RES.,VAR,NONWIR:10K OHM,10%,0.50W	73138	82-25-2
A13A1R120	321-0193-00			RES.,FXD,FILM:1K OHM,1%,0.125W	01121	ORD BY DESCR
A13A1R122	321-0346-00			RES.,FXD,FILM:39.2K OHM,1%,0.125W	91637	CMF55116G32201F
A13A1R125	311-1232-00			RES.,VAR,NONWIR:50K OHM,20%,0.50W	32997	3386F-T04-503
A13A1R126	315-0104-00			RES.,FXD,CMPSN:100K OHM,5%,0.25W	01121	CB1045
A13A1R127	321-0222-00			RES.,FXD,FILM:2K OHM,1%,0.125W	91637	MFF1816G20000F
A13A1R128	315-0100-00			RES.,FXD,CMPSN:10 OHM,5%,0.25W	01121	CB1005
A13A1R129	315-0100-00			RES.,FXD,CMPSN:10 OHM,5%,0.25W	01121	CB1005
A13A1R130	315-0101-00			RES.,FXD,CMPSN:100 OHM,5%,0.25W	01121	CB1015
A13A1R131	321-0222-00			RES.,FXD,FILM:2K OHM,1%,0.125W	91637	MFF1816G20000F
A13A1R133	321-0178-00			RES.,FXD,FILM:698 OHM,1%,0.125W	91637	MFF1816G698R0F
A13A1R134	321-0188-00			RES.,FXD,FILM:887 OHM,1%,0.125W	91637	MFF1816G887R0F
A13A1R135	311-1223-00			RES.,VAR,NONWIR:TRMR,250 OHM,0.5W	73138	72-5-0
A13A1R136	315-0821-00			RES.,FXD,CMPSN:820 OHM,5%,0.25W	01121	CB8215
A13A1R140	315-0391-00			RES.,FXD,CMPSN:390 OHM,5%,0.25W	01121	CB3915
A13A1R141	315-0472-00			RES.,FXD,CMPSN:4.7K OHM,5%,0.25W	01121	CB4725
A13A1R142	315-0101-00			RES.,FXD,CMPSN:100 OHM,5%,0.25W	01121	CB1015
A13A1R143	315-0152-00			RES.,FXD,CMPSN:1.5K OHM,5%,0.25W	01121	CB1525
A13A1R144	315-0103-00			RES.,FXD,CMPSN:10K OHM,5%,0.25W	01121	CB1035
A13A1R145	315-0302-00			RES.,FXD,CMPSN:3K OHM,5%,0.25W	01121	CB3025
A13A1R146	321-0164-00			RES.,FXD,FILM:499 OHM,1%,0.125W	91637	MFF1816G499R0F
A13A1R150	315-0101-00			RES.,FXD,CMPSN:100 OHM,5%,0.25W	01121	CB1015
A13A1R151	315-0100-00			RES.,FXD,CMPSN:10 OHM,5%,0.25W	01121	CB1005
A13A1R152	315-0100-00			RES.,FXD,CMPSN:10 OHM,5%,0.25W	01121	CB1005
A13A1R153	321-0213-00			RES.,FXD,FILM:1.62K OHM,1%,0.125W	91637	MFF1816G16200F
A13A1R154	321-0306-00			RES.,FXD,FILM:15K OHM,1%,0.125W	91637	MFF1816G15001F
A13A1R155	321-0297-00			RES.,FXD,FILM:12.1K OHM,1%,0.125W	91637	MFF1816G12101F
A13A1R157	315-0911-00			RES.,FXD,CMPSN:910 OHM,5%,0.25W	01121	CB9115
A13A1R161	315-0473-00			RES.,FXD,CMPSN:47K OHM,5%,0.25W	01121	CB4735
A13A1R162	315-0513-00			RES.,FXD,CMPSN:51K OHM,5%,0.25W	01121	CB5135
A13A1R170	315-0124-00			RES.,FXD,CMPSN:120K OHM,5%,0.25W	01121	CB1245
A13A1R171	315-0434-00			RES.,FXD,CMPSN:430K OHM,5%,0.25W	01121	CB4345
A13A1R172	301-0823-00			RES.,FXD,CMPSN:82K OHM,5%,0.50W	01121	EB8235
A13A1R173	311-1226-00			RES.,VAR,NONWIR:2.5K OHM,20%,0.50W	32997	3386F-T04-252
A13A1R174	321-0157-00			RES.,FXD,FILM:422 OHM,1%,0.125W	91637	MFF1816G422R0F
A13A1R175	315-0470-00			RES.,FXD,CMPSN:47 OHM,5%,0.25W	01121	CB4705
A13A1R179	315-0221-00	B010131		RES.,FXD,CMPSN:220 OHM,5%,0.25W	01121	CB2215
A13A1R180	315-0111-00	B010131		RES.,FXD,CMPSN:110 OHM,5%,0.25W	01121	CB1115

Component No.	Tektronix Part No.	Serial/Model No. Eff	Dscont	Name & Description	Mfr Code	Mfr Part Number
A13A1R181	321-0222-00	B010100	B010130	RES.,FXD,FILM:2K OHM,1%,0.125W	91637	MFF1816G20000F
A13A1R181	321-0739-01	B010131		RES.,FXD,FILM:1.68K OHM,0.5%,0.125W	91637	MFF1816G16800D
A13A1R182	321-0222-00	B010100	B010130	RES.,FXD,FILM:2K OHM,1%,0.125W	91637	MFF1816G20000F
A13A1R182	321-0191-09	B010131		RES.,FXD,FILM:953 OHM,1%,0.125W	24546	NE55E9530F
A13A1R183	321-0193-00	B010100	B010130	RES.,FXD,FILM:1K OHM,1%,0.125W	01121	ORD BY DESCR
A13A1R183	321-0612-00	B010131		RES.,FXD,FILM:500 OHM,1%,0.125W	91637	MFF1816G500R0F
A13A1R184	315-0302-00	B010100	B010130	RES.,FXD,CMPSN:3K OHM,5%,0.25W	01121	CB3025
A13A1R184	301-0391-00	B010131		RES.,FXD,CMPSN:390 OHM,5%,0.5W	01121	EB3915
A13A1R185	315-0182-00	B010100	B010130	RES.,FXD,CMPSN:1.8K OHM,5%,0.25W	01121	CB1825
A13A1R185	315-0331-00	B010131		RES.,FXD,CMPSN:330 OHM,5%,0.25W	01121	CB3315
A13A1R186	315-0222-00	B010100	B010130	RES.,FXD,CMPSN:2.2K OHM,5%,0.25W	01121	CB2225
A13A1R186	301-0122-00	B010131		RES.,FXD,CMPSN:1.2K OHM,5%,0.5W	01121	EB1225
A13A1R187	315-0510-00	B010100	B010130	RES.,FXD,CMPSN:51 OHM,5%,0.25W	01121	CB5105
A13A1R187	----- -----	B010131		WIRE STRAP:		
A13A1R188	315-0332-00	B010100	B010130	RES.,FXD,CMPSN:3.3K OHM,5%,0.25W	01121	CB3325
A13A1R188	301-0391-00	B010131		RES.,FXD,CMPSN:390 OHM,5%,0.5W	01121	EB3915
A13A1R189	323-0233-00	B010131		RES.,FXD,FILM:2.61K OHM,1%,0.50W	75042	CECT0-2611F
A13A1R191	311-1466-00	B010100	B010130	RES.,VAR,NONWW:TRMR,2K OHM,0.5W	02111	63M202T602
A13A1R191	311-1225-00	B010131		RES.,VAR,NONWIR:1K OHM,20%,0.50W	32997	3386F-T04-102
A13A1R193	323-0093-00			RES.,FXD,FILM:90.9 OHM,1%,0.50W	75042	CECT0-90R90F
A13A1R194	323-0093-00			RES.,FXD,FILM:90.9 OHM,1%,0.50W	75042	CECT0-90R90F
A13A1R195	323-0207-00			RES.,FXD,FILM:1.4K OHM,1%,0.50W	75042	CECT0-1401F
A13A1R195	----- -----			(BEGAN USAGE 670-6355-03)		
A13A1R204	308-0836-00			RES.,FXD,WW:1.2 OHM,5%,1W,FUSIBLE	75042	BW-20F-1.2 OHM
A13A1R206	308-0836-00			RES.,FXD,WW:1.2 OHM,5%,1W,FUSIBLE	75042	BW-20F-1.2 OHM
A13A1R207	301-0331-00			RES.,FXD,CMPSN:330 OHM,5%,0.5W	01121	EB3315
A13A1R208	308-0836-00			RES.,FXD,WW:1.2 OHM,5%,1W,FUSIBLE	75042	BW-20F-1.2 OHM
A13A1R215	321-0354-00			RES.,FXD,FILM:47.5K OHM,1%,0.125W	91637	CMF55116G47501F
A13A1R217	315-0101-00			RES.,FXD,CMPSN:100 OHM,5%,0.25W	01121	CB1015
A13A1R218	315-0273-00			RES.,FXD,CMPSN:27K OHM,5%,0.25W	01121	CB2735
A13A1R219	315-0273-00			RES.,FXD,CMPSN:27K OHM,5%,0.25W	01121	CB2735
A13A1R221	321-0326-00			RES.,FXD,FILM:24.3K OHM,1%,0.125W	91637	CMF55116G24301F
A13A1R222	321-0089-00			RES.,FXD,FILM:82.5 OHM,1%,0.125W	91637	MFF1816G82R50F
A13A1R223	321-0186-00			RES.,FXD,FILM:845 OHM,1%,0.125W	91637	MFF1816G845R0F
A13A1R224	321-0460-00			RES.,FXD,FILM:604K OHM,1%,0.125W	91637	MFF1816G60402F
A13A1R225	321-0309-00			RES.,FXD,FILM:16.2K OHM,1%,0.125W,TC=TO	91637	CMF55116G16201F
A13A1R226	321-0321-00			RES.,FXD,FILM:21.5K OHM,1%,0.125W	91637	MFF1816G21501F
A13A1R227	315-0273-00			RES.,FXD,CMPSN:27K OHM,5%,0.25W	01121	CB2735
A13A1R228	315-0273-00			RES.,FXD,CMPSN:27K OHM,5%,0.25W	01121	CB2735
A13A1R230	315-0472-00			RES.,FXD,CMPSN:4.7K OHM,5%,0.25W	01121	CB4725
A13A1R231	315-0511-00			RES.,FXD,CMPSN:510 OHM,5%,0.25W	01121	CB5115
A13A1R232	315-0821-00			RES.,FXD,CMPSN:820 OHM,5%,0.25W	01121	CB8215
A13A1R234	315-0681-00			RES.,FXD,CMPSN:680 OHM,5%,0.25W	01121	CB6815
A13A1R235	315-0122-00			RES.,FXD,CMPSN:1.2K OHM,5%,0.25W	01121	CB1225
A13A1R236	301-0911-00			RES.,FXD,CMPSN:910 OHM,5%,0.50W	01121	EB9115
A13A1R237	315-0512-00			RES.,FXD,CMPSN:5.1K OHM,5%,0.25W	01121	CB5125
A13A1R238	315-0103-00			RES.,FXD,CMPSN:10K OHM,5%,0.25W	01121	CB1035
A13A1R239	315-0512-00			RES.,FXD,CMPSN:5.1K OHM,5%,0.25W	01121	CB5125
A13A1R242	315-0152-00			RES.,FXD,CMPSN:1.5K OHM,5%,0.25W	01121	CB1525
A13A1R243	315-0113-00			RES.,FXD,CMPSN:11K OHM,5%,0.25W	01121	CB1135
A13A1R244	315-0164-00			RES.,FXD,CMPSN:160K OHM,5%,0.25W	01121	CB1645
A13A1R245	321-0222-00			RES.,FXD,FILM:2K OHM,1%,0.125W	91637	MFF1816G20000F
A13A1R246	321-0053-00			RES.,FXD,FILM:34.8 OHM,1%,0.125W	91637	MFF1816G34R80F
A13A1R249	315-0100-00			RES.,FXD,CMPSN:10 OHM,5%,0.25W	01121	CB1005

Component No.	Tektronix Part No.	Serial/Model No. Eff	Dscont	Name & Description	Mfr Code	Mfr Part Number
A13A1R250	315-0100-00			RES.,FXD,CMPSN:10 OHM,5%,0.25W	01121	CB1005
A13A1R252	315-0103-00			RES.,FXD,CMPSN:10K OHM,5%,0.25W	01121	CB1035
A13A1R253	301-0102-00			RES.,FXD,CMPSN:1K OHM,5%,0.50W	01121	EB1025
A13A1R254	321-0364-00			RES.,FXD,FILM:60.4K OHM,1%,0.125W	91637	CMF55116G60401F
A13A1R255	315-0471-00			RES.,FXD,CMPSN:470 OHM,5%,0.25W	01121	CB4715
A13A1R265	321-0510-00			RES.,FXD,FILM:2M OHM,1%,0.125W	91637	HFF188G20003F
A13A1R266	321-0510-00			RES.,FXD,FILM:2M OHM,1%,0.125W	91637	HFF188G20003F
A13A1R271	315-0103-00			RES.,FXD,CMPSN:10K OHM,5%,0.25W	01121	HFF188G20003F
A13A1R273	315-0363-00			RES.,FXD,CMPSN:36K OHM,5%,0.25W	01121	CB3635
A13A1R274	315-0103-00			RES.,FXD,CMPSN:10K OHM,5%,0.25W	01121	CB1035
A13A1R275	315-0103-00			RES.,FXD,CMPSN:10K OHM,5%,0.25W	01121	CB1035
A13A1R277	315-0102-00			RES.,FXD,CMPSN:1K OHM,5%,0.25W	01121	CB1025
A13A1R281	315-0303-00			RES.,FXD,CMPSN:30K OHM,5%,0.25W	01121	CB3035
A13A1R282	321-0364-00	B010100	B010129	RES.,FXD,FILM:60.4K OHM,1%,0.125W	91637	CMF55116G60401F
A13A1R282	321-0393-00	B010130		RES.,FXD,FILM:121K OHM,1%,0.125W	91637	CMF55116G12102F
A13A1R293	321-0385-00			RES.,FXD,FILM:100K OHM,1%,0.125W	91637	MFF1816G10002F
A13A1R305	321-0240-00			RES.,FXD,FILM:3.09K OHM,1%,0.125W	91637	MFF1816G30900F
A13A1R306	321-0340-00			RES.,FXD,FILM:34K OHM,1%,0.125W	91637	CMF55116G34001F
A13A1R307	321-0351-00			RES.,FXD,FILM:44.2K OHM,1%,0.125W	91637	MFF1816G44201F
A13A1R309	315-0103-00			RES.,FXD,CMPSN:10K OHM,5%,0.25W	01121	CB1035
A13A1R310	321-0333-00			RES.,FXD,FILM:28.7K OHM,1%,0.125W	91637	CMF55116G28701F
A13A1R312	321-0330-00			RES.,FXD,FILM:26.7K OHM,1%,0.125W	91637	MFF1816G26701F
A13A1R316	321-0210-00			RES.,FXD,FILM:1.5K OHM,1%,0.125W	91637	MFF1816G15000F
A13A1R317	321-0236-00			RES.,FXD,FILM:2.8K OHM,1%,0.125W	91637	MFF1816G28000F
A13A1R322	321-0222-00			RES.,FXD,FILM:2K OHM,1%,0.125W	91637	MFF1816G20000F
A13A1R323	315-0100-00			RES.,FXD,CMPSN:10 OHM,5%,0.25W	01121	CB1005
A13A1R324	315-0100-00			RES.,FXD,CMPSN:10 OHM,5%,0.25W	01121	CB1005
A13A1R326	315-0273-00			RES.,FXD,CMPSN:27K OHM,5%,0.25W	01121	CB2735
A13A1R327	321-0346-00			RES.,FXD,FILM:39.2K OHM,1%,0.125W	91637	CMF55116G32201F
A13A1R328	321-0318-00			RES.,FXD,FILM:20K OHM,1%,0.125W	91637	MFF1816G20001F
A13A1R329	321-0090-00			RES.,FXD,FILM:84.5 OHM,1%,0.125W	91637	MFF1816G84R50F
A13A1R330	321-0178-00			RES.,FXD,FILM:698 OHM,1%,0.125W	91637	MFF1816G698R0F
A13A1R332	315-0101-00			RES.,FXD,CMPSN:100 OHM,5%,0.25W	01121	CB1015
A13A1R333	321-0222-00			RES.,FXD,FILM:2K OHM,1%,0.125W	91637	MFF1816G20000F
A13A1R334	321-0178-00			RES.,FXD,FILM:698 OHM,1%,0.125W	91637	MFF1816G698R0F
A13A1R335	311-1223-00			RES.,VAR,NONWIR:TRMR,250 OHM,0.5W	73138	72-5-0
A13A1R336	321-0180-00			RES.,FXD,FILM:732 OHM,1%,0.125W	91637	MFF1816G732R0F
A13A1R338	315-0821-00			RES.,FXD,CMPSN:820 OHM,5%,0.25W	01121	CB8215
A13A1R340	315-0391-00			RES.,FXD,CMPSN:390 OHM,5%,0.25W	01121	CB3915
A13A1R341	315-0472-00			RES.,FXD,CMPSN:4.7K OHM,5%,0.25W	01121	CB4725
A13A1R342	315-0101-00			RES.,FXD,CMPSN:100 OHM,5%,0.25W	01121	CB1015
A13A1R343	315-0152-00			RES.,FXD,CMPSN:1.5K OHM,5%,0.25W	01121	CB1525
A13A1R344	315-0103-00			RES.,FXD,CMPSN:10K OHM,5%,0.25W	01121	CB1035
A13A1R345	315-0302-00			RES.,FXD,CMPSN:3K OHM,5%,0.25W	01121	CB3025
A13A1R346	321-0164-00			RES.,FXD,FILM:499 OHM,1%,0.125W	91637	MFF1816G499R0F
A13A1R351	315-0101-00			RES.,FXD,CMPSN:100 OHM,5%,0.25W	01121	CB1015
A13A1R352	315-0100-00			RES.,FXD,CMPSN:10 OHM,5%,0.25W	01121	CB1005
A13A1R354	315-0100-00			RES.,FXD,CMPSN:10 OHM,5%,0.25W	01121	CB1005
A13A1R355	321-0213-00			RES.,FXD,FILM:1.62K OHM,1%,0.125W	91637	MFF1816G16200F
A13A1R356	321-0297-00			RES.,FXD,FILM:12.1K OHM,1%,0.125W	91637	MFF1816G12101F
A13A1R357	315-0911-00			RES.,FXD,CMPSN:910 OHM,5%,0.25W	01121	CB9115
A13A1R360	321-0306-00			RES.,FXD,FILM:15K OHM,1%,0.125W	91637	MFF1816G15001F
A13A1R361	315-0473-00			RES.,FXD,CMPSN:47K OHM,5%,0.25W	01121	CB4735

Component No.	Tektronix Part No.	Serial/Model No. Eff	Dscont	Name & Description	Mfr Code	Mfr Part Number
A13A1R362	315-0513-00			RES.,FXD,CMPSN:51K OHM,5%,0.25W	01121	CB5135
A13A1R371	315-0124-00			RES.,FXD,CMPSN:120K OHM,5%,0.25W	01121	CB1245
A13A1R372	315-0434-00			RES.,FXD,CMPSN:430K OHM,5%,0.25W	01121	CB4345
A13A1R373	301-0823-00			RES.,FXD,CMPSN:82K OHM,5%,0.50W	01121	EB8235
A13A1R374	321-0157-00			RES.,FXD,FILM:422 OHM,1%,0.125W	91637	MFF1816G422R0F
A13A1R375	315-0470-00			RES.,FXD,CMPSN:47 OHM,5%,0.25W	01121	CB4705
A13A1R379	315-0221-00	B010131		RES.,FXD,CMPSN:220 OHM,5%,0.25W	01121	CB2215
A13A1R380	315-0111-00	B010131		RES.,FXD,CMPSN:110 OHM,5%,0.25W	01121	CB1115
A13A1R381	321-0222-00	B010100	B010130	RES.,FXD,FILM:2K OHM,1%,0.125W	91637	MFF1816G20000F
A13A1R381	321-0739-01	B010131		RES.,FXD,FILM:1.68K OHM,0.5%,0.125W	91637	MFF1816G16800D
A13A1R382	321-0222-00	B010100	B010130	RES.,FXD,FILM:2K OHM,1%,0.125W	91637	MFF1816G20000F
A13A1R382	321-0191-09	B010131		RES.,FXD,FILM:953 OHM,1%,0.125W	24546	NE55E9530F
A13A1R383	321-0193-00	B010100	B010130	RES.,FXD,FILM:1K OHM,1%,0.125W	01121	ORD BY DESCR
A13A1R383	321-0612-00	B010131		RES.,FXD,FILM:500 OHM,1%,0.125W	91637	MFF1816G500R0F
A13A1R384	315-0182-00	B010100	B010130	RES.,FXD,CMPSN:1.8K OHM,5%,0.25W	01121	CB1825
A13A1R384	315-0331-00	B010131		RES.,FXD,CMPSN:330 OHM,5%,0.25W	01121	CB3315
A13A1R385	315-0222-00	B010100	B010130	RES.,FXD,CMPSN:2.2K OHM,5%,0.25W	01121	CB2225
A13A1R385	301-0122-00	B010131		RES.,FXD,CMPSN:1.2K OHM,5%,0.5W	01121	EB1225
A13A1R386	315-0510-00	B010100	B010130	RES.,FXD,CMPSN:51 OHM,5%,0.25W	01121	CB5105
A13A1R386	----- -----	B010131	B010134	WIRE STRAP:		
A13A1R386	315-0510-00	B010135		RES.,FXD,CMPSN:51 OHM,5%,0.25W	01121	CB5105
A13A1R387	315-0302-00	B010100	B010130	RES.,FXD,CMPSN:3K OHM,5%,0.25W	01121	CB3025
A13A1R387	301-0391-00	B010131		RES.,FXD,CMPSN:390 OHM,5%,0.5W	01121	EB3915
A13A1R388	315-0332-00	B010100	B010130	RES.,FXD,CMPSN:3.3K OHM,5%,0.25W	01121	CB3325
A13A1R388	301-0391-00	B010131		RES.,FXD,CMPSN:390 OHM,5%,0.5W	01121	EB3915
A13A1R389	323-0233-00	B010131		RES.,FXD,FILM:2.61K OHM,1%,0.50W	75042	CECT0-2611F
A13A1R391	311-1466-00	B010100	B010130	RES.,VAR,NONWW:TRMR,2K OHM,0.5W	02111	63M202T602
A13A1R391	311-1225-00	B010131		RES.,VAR,NONWIR:1K OHM,20%,0.50W	32997	3386F-T04-102
A13A1R392	323-0093-00			RES.,FXD,FILM:90.9 OHM,1%,0.50W	75042	CECT0-90R90F
A13A1R394	323-0093-00			RES.,FXD,FILM:90.9 OHM,1%,0.50W	75042	CECT0-90R90F
A13A1R395	323-0207-00			RES.,FXD,FILM:1.4K OHM,1%,0.50W	75042	CECT0-1401F
A13A1R395	----- -----			(BEGAN USAGE 670-6355-03)		
A13A1R400	311-1226-00			RES.,VAR,NONWIR:2.5K OHM,20%,0.50W	32997	3386F-T04-252
A13A1R401	315-0103-00			RES.,FXD,CMPSN:10K OHM,5%,0.25W	01121	CB1035
A13A1R403	315-0562-00			RES.,FXD,CMPSN:5.6K OHM,5%,0.25W	01121	CB5625
A13A1R404	315-0821-00			RES.,FXD,CMPSN:820 OHM,5%,0.25W	01121	CB8215
A13A1R405	315-0273-00			RES.,FXD,CMPSN:27K OHM,5%,0.25W	01121	CB2735
A13A1R406	315-0102-00			RES.,FXD,CMPSN:1K OHM,5%,0.25W	01121	CB1025
A13A1R407	315-0102-00			RES.,FXD,CMPSN:1K OHM,5%,0.25W	01121	CB1025
A13A1R416	315-0222-00			RES.,FXD,CMPSN:2.2K OHM,5%,0.25W	01121	CB2225
A13A1R418	315-0182-00			RES.,FXD,CMPSN:1.8K OHM,5%,0.25W	01121	CB1825
A13A1R419	315-0273-00			RES.,FXD,CMPSN:27K OHM,5%,0.25W	01121	CB2735
A13A1R420	315-0273-00			RES.,FXD,CMPSN:27K OHM,5%,0.25W	01121	CB2735
A13A1R421	315-0273-00			RES.,FXD,CMPSN:27K OHM,5%,0.25W	01121	CB2735
A13A1R427	321-0460-00			RES.,FXD,FILM:604K OHM,1%,0.125W	91637	MFF1816G60402F
A13A1R428	321-0309-00			RES.,FXD,FILM:16.2K OHM,1%,0.125W,TC=TO	91637	CMF55116G16201F
A13A1R429	321-0321-00			RES.,FXD,FILM:21.5K OHM,1%,0.125W	91637	MFF1816G21501F
A13A1R430	315-0472-00			RES.,FXD,CMPSN:4.7K OHM,5%,0.25W	01121	CB4725
A13A1R431	315-0511-00			RES.,FXD,CMPSN:510 OHM,5%,0.25W	01121	CB5115
A13A1R432	315-0681-00			RES.,FXD,CMPSN:680 OHM,5%,0.25W	01121	CB6815
A13A1R433	315-0122-00			RES.,FXD,CMPSN:1.2K OHM,5%,0.25W	01121	CB1225
A13A1R434	301-0911-00			RES.,FXD,CMPSN:910 OHM,5%,0.50W	01121	EB9115
A13A1R435	315-0512-00			RES.,FXD,CMPSN:5.1K OHM,5%,0.25W	01121	CB5125
A13A1R436	315-0103-00			RES.,FXD,CMPSN:10K OHM,5%,0.25W	01121	CB1035

Component No.	Tektronix Part No.	Serial/Model No. Eff	Dscont	Name & Description	Mfr Code	Mfr Part Number
A13A1R437	315-0512-00			RES.,FXD,CMPSN:5.1K OHM,5%,0.25W	01121	CB5125
A13A1R438	315-0821-00			RES.,FXD,CMPSN:820 OHM,5%,0.25W	01121	CB8215
A13A1R441	315-0152-00			RES.,FXD,CMPSN:1.5K OHM,5%,0.25W	01121	CB1525
A13A1R442	315-0113-00			RES.,FXD,CMPSN:11K OHM,5%,0.25W	01121	CB1135
A13A1R443	315-0164-00			RES.,FXD,CMPSN:160K OHM,5%,0.25W	01121	CB1645
A13A1R444	321-0222-00			RES.,FXD,FILM:2K OHM,1%,0.125W	91637	MFF1816G20000F
A13A1R445	321-0053-00			RES.,FXD,FILM:34.8 OHM,1%,0.125W	91637	MFF1816G34R80F
A13A1R449	315-0100-00			RES.,FXD,CMPSN:10 OHM,5%,0.25W	01121	CB1005
A13A1R450	315-0100-00			RES.,FXD,CMPSN:10 OHM,5%,0.25W	01121	CB1005
A13A1R451	315-0103-00			RES.,FXD,CMPSN:10K OHM,5%,0.25W	01121	CB1035
A13A1R452	301-0102-00			RES.,FXD,CMPSN:1K OHM,5%,0.50W	01121	EB1025
A13A1R453	321-0364-00			RES.,FXD,FILM:60.4K OHM,1%,0.125W	91637	CMF55116G60401F
A13A1R454	315-0471-00			RES.,FXD,CMPSN:470 OHM,5%,0.25W	01121	CB4715
A13A1R463	321-0510-00			RES.,FXD,FILM:2M OHM,1%,0.125W	91637	HFF188G20003F
A13A1R465	321-0510-00			RES.,FXD,FILM:2M OHM,1%,0.125W	91637	HFF188G20003F
A13A1R471	315-0102-00			RES.,FXD,CMPSN:1K OHM,5%,0.25W	01121	CB1025
A13A1R472	315-0103-00			RES.,FXD,CMPSN:10K OHM,5%,0.25W	01121	CB1035
A13A1R473	315-0363-00			RES.,FXD,CMPSN:36K OHM,5%,0.25W	01121	CB3635
A13A1R474	315-0103-00			RES.,FXD,CMPSN:10K OHM,5%,0.25W	01121	CB1035
A13A1R475	315-0103-00			RES.,FXD,CMPSN:10K OHM,5%,0.25W	01121	CB1035
A13A1R477	315-0102-00			RES.,FXD,CMPSN:1K OHM,5%,0.25W	01121	CB1025
A13A1R481	315-0303-00			RES.,FXD,CMPSN:30K OHM,5%,0.25W	01121	CB3035
A13A1R482	321-0364-00	B010100	B010129	RES.,FXD,FILM:60.4K OHM,1%,0.125W	91637	CMF55116G60401F
A13A1R482	321-0393-00	B010130		RES.,FXD,FILM:121K OHM,1%,0.125W	91637	CMF55116G12102F
A13A1R493	321-0385-00			RES.,FXD,FILM:100K OHM,1%,0.125W	91637	MFF1816G10002F
A13A1R506	315-0273-00			RES.,FXD,CMPSN:27K OHM,5%,0.25W	01121	CB2735
A13A1R509	315-0153-00			RES.,FXD,CMPSN:15K OHM,5%,0.25W	01121	CB1535
A13A1R515	315-0182-00			RES.,FXD,CMPSN:1.8K OHM,5%,0.25W	01121	CB1825
A13A1R518	315-0332-00			RES.,FXD,CMPSN:3.3K OHM,5%,0.25W	01121	CB3325
A13A1R519	321-0346-00			RES.,FXD,FILM:39.2K OHM,1%,0.125W	91637	CMF55116G32201F
A13A1R520	315-0104-00			RES.,FXD,CMPSN:100K OHM,5%,0.25W	01121	CB1045
A13A1R521	321-0222-00			RES.,FXD,FILM:2K OHM,1%,0.125W	91637	MFF1816G20000F
A13A1R522	315-0100-00			RES.,FXD,CMPSN:10 OHM,5%,0.25W	01121	CB1005
A13A1R523	315-0100-00			RES.,FXD,CMPSN:10 OHM,5%,0.25W	01121	CB1005
A13A1R525	311-1232-00			RES.,VAR,NONWIR:50K OHM,20%,0.50W	32997	3386F-T04-503
A13A1R526	321-0311-00			RES.,FXD,FILM:16.9K OHM,1%,0.125W	91637	MFF1816G16901F
A13A1R527	321-0090-00			RES.,FXD,FILM:84.5 OHM,1%,0.125W	91637	MFF1816G84R50F
A13A1R528	321-0171-00			RES.,FXD,FILM:590 OHM,1%,0.125W	91637	MFF1816G590R0F
A13A1R529	321-0460-00			RES.,FXD,FILM:604K OHM,1%,0.125W	91637	MFF1816G60402F
A13A1R530	321-0309-00			RES.,FXD,FILM:16.2K OHM,1%,0.125W,TC=TO	91637	CMF55116G16201F
A13A1R531	321-0321-00			RES.,FXD,FILM:21.5K OHM,1%,0.125W	91637	MFF1816G21501F
A13A1R532	315-0101-00			RES.,FXD,CMPSN:100 OHM,5%,0.25W	01121	CB1015
A13A1R533	321-0222-00			RES.,FXD,FILM:2K OHM,1%,0.125W	91637	MFF1816G20000F
A13A1R534	321-0178-00			RES.,FXD,FILM:698 OHM,1%,0.125W	91637	MFF1816G698R0F
A13A1R535	311-1223-00			RES.,VAR,NONWIR:TRMR,250 OHM,0.5W	73138	72-5-0
A13A1R536	315-0821-00			RES.,FXD,CMPSN:820 OHM,5%,0.25W	01121	CB8215
A13A1R537	315-0472-00			RES.,FXD,CMPSN:4.7K OHM,5%,0.25W	01121	CB4725
A13A1R538	315-0511-00			RES.,FXD,CMPSN:510 OHM,5%,0.25W	01121	CB5115
A13A1R539	321-0174-00			RES.,FXD,FILM:634 OHM,1%,0.125W	91637	MFF1816G634R0F
A13A1R540	315-0821-00			RES.,FXD,CMPSN:820 OHM,5%,0.25W	01121	CB8215
A13A1R541	315-0391-00			RES.,FXD,CMPSN:390 OHM,5%,0.25W	01121	CB3915
A13A1R542	315-0472-00			RES.,FXD,CMPSN:4.7K OHM,5%,0.25W	01121	CB4725
A13A1R543	315-0101-00			RES.,FXD,CMPSN:100 OHM,5%,0.25W	01121	CB1015
A13A1R544	315-0152-00			RES.,FXD,CMPSN:1.5K OHM,5%,0.25W	01121	CB1525

Component No.	Tektronix Part No.	Serial/Model No. Eff	Dscont	Name & Description	Mfr Code	Mfr Part Number
A13A1R545	315-0103-00			RES.,FXD,CMPSN:10K OHM,5%,0.25W	01121	CB1035
A13A1R546	315-0302-00			RES.,FXD,CMPSN:3K OHM,5%,0.25W	01121	CB3025
A13A1R547	321-0164-00			RES.,FXD,FILM:499 OHM,1%,0.125W	91637	MFF1816G499R0F
A13A1R548	315-0152-00			RES.,FXD,CMPSN:1.5K OHM,5%,0.25W	01121	CB1525
A13A1R549	315-0113-00			RES.,FXD,CMPSN:11K OHM,5%,0.25W	01121	CB1135
A13A1R550	315-0164-00			RES.,FXD,CMPSN:160K OHM,5%,0.25W	01121	CB1645
A13A1R552	315-0101-00			RES.,FXD,CMPSN:100 OHM,5%,0.25W	01121	CB1015
A13A1R553	315-0100-00			RES.,FXD,CMPSN:10 OHM,5%,0.25W	01121	CB1005
A13A1R554	315-0100-00			RES.,FXD,CMPSN:10 OHM,5%,0.25W	01121	CB1005
A13A1R555	321-0213-00			RES.,FXD,FILM:1.62K OHM,1%,0.125W	91637	MFF1816G16200F
A13A1R556	321-0306-00			RES.,FXD,FILM:15K OHM,1%,0.125W	91637	MFF1816G15001F
A13A1R557	315-0911-00			RES.,FXD,CMPSN:910 OHM,5%,0.25W	01121	CB9115
A13A1R562	315-0473-00			RES.,FXD,CMPSN:47K OHM,5%,0.25W	01121	CB4735
A13A1R563	315-0513-00			RES.,FXD,CMPSN:51K OHM,5%,0.25W	01121	CB5135
A13A1R570	315-0221-00	B010131		RES.,FXD,CMPSN:220 OHM,5%,0.25W	01121	CB2215
A13A1R571	315-0124-00			RES.,FXD,CMPSN:120K OHM,5%,0.25W	01121	CB1245
A13A1R572	315-0434-00			RES.,FXD,CMPSN:430K OHM,5%,0.25W	01121	CB4345
A13A1R573	301-0823-00			RES.,FXD,CMPSN:82K OHM,5%,0.50W	01121	EB8235
A13A1R574	321-0157-00			RES.,FXD,FILM:422 OHM,1%,0.125W	91637	MFF1816G422R0F
A13A1R575	315-0470-00			RES.,FXD,CMPSN:47 OHM,5%,0.25W	01121	CB4705
A13A1R576	315-0102-00			RES.,FXD,CMPSN:1K OHM,5%,0.25W	01121	CB1025
A13A1R577	315-0103-00			RES.,FXD,CMPSN:10K OHM,5%,0.25W	01121	CB1035
A13A1R578	315-0363-00			RES.,FXD,CMPSN:36K OHM,5%,0.25W	01121	CB3635
A13A1R579	315-0102-00			RES.,FXD,CMPSN:1K OHM,5%,0.25W	01121	CB1025
A13A1R580	315-0111-00	B010131		RES.,FXD,CMPSN:110 OHM,5%,0.25W	01121	CB1115
A13A1R581	321-0222-00	B010100	B010130	RES.,FXD,FILM:2K OHM,1%,0.125W	91637	MFF1816G20000F
A13A1R581	321-0739-01	B010131		RES.,FXD,FILM:1.68K OHM,0.5%,0.125W	91637	MFF1816G16800D
A13A1R582	321-0222-00	B010100	B010130	RES.,FXD,FILM:2K OHM,1%,0.125W	91637	MFF1816G20000F
A13A1R582	321-0191-09	B010131		RES.,FXD,FILM:953 OHM,1%,0.125W	24546	NE55E9530F
A13A1R583	321-0193-00	B010100	B010130	RES.,FXD,FILM:1K OHM,1%,0.125W	01121	ORD BY DESCR
A13A1R583	321-0612-00	B010131		RES.,FXD,FILM:500 OHM,1%,0.125W	91637	MFF1816G500R0F
A13A1R584	315-0182-00	B010100	B010130	RES.,FXD,CMPSN:1.8K OHM,5%,0.25W	01121	CB1825
A13A1R584	315-0331-00	B010131		RES.,FXD,CMPSN:330 OHM,5%,0.25W	01121	CB3315
A13A1R585	315-0222-00	B010100	B010130	RES.,FXD,CMPSN:2.2K OHM,5%,0.25W	01121	CB2225
A13A1R585	301-0122-00	B010131	B010134	RES.,FXD,CMPSN:1.2K OHM,5%,0.5W	01121	EB1225
A13A1R586	315-0510-00	B010135		RES.,FXD,CMPSN:51 OHM,5%,0.25W	01121	CB5105
A13A1R586	----- -----	B010131		WIRE STRAP:		
A13A1R586	315-0510-00	B010100	B010130	RES.,FXD,CMPSN:51 OHM,5%,0.25W	01121	CB5105
A13A1R587	315-0302-00	B010100	B010130	RES.,FXD,CMPSN:3K OHM,5%,0.25W	01121	CB3025
A13A1R587	301-0391-00	B010131		RES.,FXD,CMPSN:390 OHM,5%,0.5W	01121	EB3915
A13A1R588	315-0332-00	B010100	B010130	RES.,FXD,CMPSN:3.3K OHM,5%,0.25W	01121	CB3325
A13A1R588	301-0391-00	B010131		RES.,FXD,CMPSN:390 OHM,5%,0.5W	01121	EB3915
A13A1R589	323-0233-00	B010131		RES.,FXD,FILM:2.61K OHM,1%,0.50W	75042	CECT0-2611F
A13A1R591	311-1466-00	B010100	B010130	RES.,VAR,NONWW:TRMR,2K OHM,0.5W	02111	63M202T602
A13A1R591	311-1225-00	B010131		RES.,VAR,NONWIR:1K OHM,20%,0.50W	32997	3386F-T04-102
A13A1R593	323-0093-00			RES.,FXD,FILM:90.9 OHM,1%,0.50W	75042	CECT0-90R90F
A13A1R594	323-0093-00			RES.,FXD,FILM:90.9 OHM,1%,0.50W	75042	CECT0-90R90F
A13A1R595	323-0207-00			RES.,FXD,FILM:1.4K OHM,1%,0.50W	75042	CECT0-1401F
A13A1R595	----- -----			(BEGAN USAGE 670-6355-03)		
A13A1R600	311-1226-00			RES.,VAR,NONWIR:2.5K OHM,20%,0.50W	32997	3386F-T04-252
A13A1R603	315-0363-00			RES.,FXD,CMPSN:36K OHM,5%,0.25W	01121	CB3635
A13A1R606	315-0101-00			RES.,FXD,CMPSN:100 OHM,5%,0.25W	01121	CB1015
A13A1R607	315-0512-00			RES.,FXD,CMPSN:5.1K OHM,5%,0.25W	01121	CB5125
A13A1R612	315-0183-00			RES.,FXD,CMPSN:18K OHM,5%,0.25W	01121	CB1835

Component No.	Tektronix Part No.	Serial/Model No. Eff	Dscont	Name & Description	Mfr Code	Mfr Part Number
A13A1R613	301-0152-00			RES.,FXD,CMPSN:1.5K OHM,5%,0.5W	01121	EB1525
A13A1R615	315-0101-00			RES.,FXD,CMPSN:100 OHM,5%,0.25W	01121	CB1015
A13A1R619	315-0273-00			RES.,FXD,CMPSN:27K OHM,5%,0.25W	01121	CB2735
A13A1R620	315-0273-00			RES.,FXD,CMPSN:27K OHM,5%,0.25W	01121	CB2735
A13A1R621	315-0273-00			RES.,FXD,CMPSN:27K OHM,5%,0.25W	01121	CB2735
A13A1R622	315-0273-00			RES.,FXD,CMPSN:27K OHM,5%,0.25W	01121	CB2735
A13A1R631	315-0681-00			RES.,FXD,CMPSN:680 OHM,5%,0.25W	01121	CB6815
A13A1R632	315-0122-00			RES.,FXD,CMPSN:1.2K OHM,5%,0.25W	01121	CB1225
A13A1R633	301-0911-00			RES.,FXD,CMPSN:910 OHM,5%,0.50W	01121	EB9115
A13A1R634	315-0512-00			RES.,FXD,CMPSN:5.1K OHM,5%,0.25W	01121	CB5125
A13A1R635	315-0103-00			RES.,FXD,CMPSN:10K OHM,5%,0.25W	01121	CB1035
A13A1R636	315-0512-00			RES.,FXD,CMPSN:5.1K OHM,5%,0.25W	01121	CB5125
A13A1R641	321-0222-00			RES.,FXD,FILM:2K OHM,1%,0.125W	91637	MFF1816G20000F
A13A1R642	321-0053-00			RES.,FXD,FILM:34.8 OHM,1%,0.125W	91637	MFF1816G34R80F
A13A1R645	315-0100-00			RES.,FXD,CMPSN:10 OHM,5%,0.25W	01121	CB1005
A13A1R646	315-0100-00			RES.,FXD,CMPSN:10 OHM,5%,0.25W	01121	CB1005
A13A1R650	315-0471-00			RES.,FXD,CMPSN:470 OHM,5%,0.25W	01121	CB4715
A13A1R651	315-0103-00			RES.,FXD,CMPSN:10K OHM,5%,0.25W	01121	CB1035
A13A1R652	301-0102-00			RES.,FXD,CMPSN:1K OHM,5%,0.50W	01121	EB1025
A13A1R653	321-0364-00			RES.,FXD,FILM:60.4K OHM,1%,0.125W	91637	CMF55116G60401F
A13A1R654	321-0297-00			RES.,FXD,FILM:12.1K OHM,1%,0.125W	91637	MFF1816G12101F
A13A1R666	321-0510-00			RES.,FXD,FILM:2M OHM,1%,0.125W	91637	HFF188G20003F
A13A1R668	321-0510-00			RES.,FXD,FILM:2M OHM,1%,0.125W	91637	HFF188G20003F
A13A1R671	315-0103-00			RES.,FXD,CMPSN:10K OHM,5%,0.25W	01121	CB1035
A13A1R672	315-0103-00			RES.,FXD,CMPSN:10K OHM,5%,0.25W	01121	CB1035
A13A1R681	315-0303-00			RES.,FXD,CMPSN:30K OHM,5%,0.25W	01121	CB3035
A13A1R683	321-0364-00	B010100	B010129	RES.,FXD,FILM:60.4K OHM,1%,0.125W	91637	CMF55116G60401F
A13A1R683	321-0393-00	B010130		RES.,FXD,FILM:121K OHM,1%,0.125W	91637	CMF55116G12102F
A13A1R694	321-0385-00			RES.,FXD,FILM:100K OHM,1%,0.125W	91637	MFF1816G10002F
A13A1U101	156-0277-01			MICROCIRCUIT,LI:POSITIVE VOLTAGE REG	04713	MC7805CTD
A13A1U120	156-0872-01			MICROCIRCUIT,LI:VOLTAGE REGULATOR	04713	MC7912CTD
A13A1U121	156-1161-00			MICROCIRCUIT,LI:VOLTAGE REGULATOR	27014	LM317T
A13A1U240	156-0936-00			MICROCIRCUIT,LI:OPERATIONAL AMPLIFIER	80009	156-0936-00
A13A1U248	156-0936-00			MICROCIRCUIT,LI:OPERATIONAL AMPLIFIER	80009	156-0936-00
A13A1U256	156-0936-00			MICROCIRCUIT,LI:OPERATIONAL AMPLIFIER	80009	156-0936-00
A13A1U267	156-0770-00			MICROCIRCUIT,LI:OPERATIONAL AMPLIFIER	27014	LF356H
A13A1U277	156-0936-00			MICROCIRCUIT,LI:OPERATIONAL AMPLIFIER	80009	156-0936-00
A13A1U310	156-0067-13			MICROCIRCUIT,LI:OPNL AMPL,SELECTED	01295	UA741CJG4
A13A1U440	156-0936-00			MICROCIRCUIT,LI:OPERATIONAL AMPLIFIER	80009	156-0936-00
A13A1U448	156-0936-00			MICROCIRCUIT,LI:OPERATIONAL AMPLIFIER	80009	156-0936-00
A13A1U455	156-0936-00			MICROCIRCUIT,LI:OPERATIONAL AMPLIFIER	80009	156-0936-00
A13A1U466	156-0770-00			MICROCIRCUIT,LI:OPERATIONAL AMPLIFIER	27014	LF356H
A13A1U477	156-0936-00			MICROCIRCUIT,LI:OPERATIONAL AMPLIFIER	80009	156-0936-00
A13A1U507	156-0405-03			MICROCIRCUIT,DI:DUAL RETRIG MONOSTABLE MV	07263	9602
A13A1U510	156-0405-03			MICROCIRCUIT,DI:DUAL RETRIG MONOSTABLE MV	07263	9602
A13A1U640	156-0936-00			MICROCIRCUIT,LI:OPERATIONAL AMPLIFIER	80009	156-0936-00
A13A1U644	156-0936-00			MICROCIRCUIT,LI:OPERATIONAL AMPLIFIER	80009	156-0936-00
A13A1U666	156-0936-00			MICROCIRCUIT,LI:OPERATIONAL AMPLIFIER	80009	156-0936-00
A13A1U669	156-0770-00			MICROCIRCUIT,LI:OPERATIONAL AMPLIFIER	27014	LF356H
A13A1U674	156-0936-00			MICROCIRCUIT,LI:OPERATIONAL AMPLIFIER	80009	156-0936-00

Component No.	Tektronix Part No.	Serial/Model No. Eff	Dscont	Name & Description	Mfr Code	Mfr Part Number
A14A1	670-6361-00	B010100	B020749	CKT BOARD ASSY:CONVERGENCE OUTPUT	80009	670-6361-00
A14A1	670-6361-02	B020750		CKT BOARD ASSY:CONVERGENCE OUTPUT	80009	670-6361-02
A14A1C112	290-0950-00			CAP.,FXD,ELCTLT:100UF,+50-10%,50V	55680	ULB1H101TJAANA
A14A1C122	290-0950-00			CAP.,FXD,ELCTLT:100UF,+50-10%,50V	55680	ULB1H101TJAANA
A14A1C145	290-0950-00			CAP.,FXD,ELCTLT:100UF,+50-10%,50V	55680	ULB1H101TJAANA
A14A1C226	290-0755-00			CAP.,FXD,ELCTLT:100UF,+50-10%,10V	55680	ULA1A01TEA
A14A1C255	290-0950-00			CAP.,FXD,ELCTLT:100UF,+50-10%,50V	55680	ULB1H101TJAANA
A14A1C314	290-0950-00			CAP.,FXD,ELCTLT:100UF,+50-10%,50V	55680	ULB1H101TJAANA
A14A1C324	290-0950-00			CAP.,FXD,ELCTLT:100UF,+50-10%,50V	55680	ULB1H101TJAANA
A14A1C426	290-0755-00			CAP.,FXD,ELCTLT:100UF,+50-10%,10V	55680	ULA1A01TEA
A14A1C452	290-0950-00			CAP.,FXD,ELCTLT:100UF,+50-10%,50V	55680	ULB1H101TJAANA
A14A1C455	290-0950-00			CAP.,FXD,ELCTLT:100UF,+50-10%,50V	55680	ULB1H101TJAANA
A14A1C511	290-0950-00			CAP.,FXD,ELCTLT:100UF,+50-10%,50V	55680	ULB1H101TJAANA
A14A1C521	290-0950-00			CAP.,FXD,ELCTLT:100UF,+50-10%,50V	55680	ULB1H101TJAANA
A14A1C626	290-0755-00			CAP.,FXD,ELCTLT:100UF,+50-10%,10V	55680	ULA1A01TEA
A14A1C652	290-0950-00			CAP.,FXD,ELCTLT:100UF,+50-10%,50V	55680	ULB1H101TJAANA
A14A1C711	290-0950-00			CAP.,FXD,ELCTLT:100UF,+50-10%,50V	55680	ULB1H101TJAANA
A14A1C721	290-0950-00			CAP.,FXD,ELCTLT:100UF,+50-10%,50V	55680	ULB1H101TJAANA
A14A1C742	290-0950-00			CAP.,FXD,ELCTLT:100UF,+50-10%,50V	55680	ULB1H101TJAANA
A14A1C826	290-0755-00			CAP.,FXD,ELCTLT:100UF,+50-10%,10V	55680	ULA1A01TEA
A14A1C924	283-0059-00			CAP.,FXD,CER DI:1UF,+80-20%,50V	51642	400050Z5U105Z
A14A1C926	283-0059-00			CAP.,FXD,CER DI:1UF,+80-20%,50V	51642	400050Z5U105Z
A14A1C929	283-0059-00			CAP.,FXD,CER DI:1UF,+80-20%,50V	51642	400050Z5U105Z
A14A1C935	283-0059-00			CAP.,FXD,CER DI:1UF,+80-20%,50V	51642	400050Z5U105Z
A14A1C937	290-0755-00			CAP.,FXD,ELCTLT:100UF,+50-10%,10V	55680	ULA1A01TEA
A14A1C939	283-0059-00			CAP.,FXD,CER DI:1UF,+80-20%,50V	51642	400050Z5U105Z
A14A1C949	283-0059-00			CAP.,FXD,CER DI:1UF,+80-20%,50V	51642	400050Z5U105Z
A14A1CR128	152-0141-02			SEMICOND DVC,DI:SW,SI,30V,150MA,30V,DO-35	01295	1N4152R
A14A1CR131	152-0141-02			SEMICOND DVC,DI:SW,SI,30V,150MA,30V,DO-35	01295	1N4152R
A14A1CR148	152-0141-02			SEMICOND DVC,DI:SW,SI,30V,150MA,30V,DO-35	01295	1N4152R
A14A1CR235	152-0066-00			SEMICOND DVC DI:RECT,SI,400V,1A,D0-41	05828	GP10G-020
A14A1CR236	152-0066-00			SEMICOND DVC DI:RECT,SI,400V,1A,D0-41	05828	GP10G-020
A14A1CR237	152-0066-00			SEMICOND DVC DI:RECT,SI,400V,1A,D0-41	05828	GP10G-020
A14A1CR238	152-0066-00			SEMICOND DVC DI:RECT,SI,400V,1A,D0-41	05828	GP10G-020
A14A1CR239	152-0141-02			SEMICOND DVC,DI:SW,SI,30V,150MA,30V,DO-35	01295	1N4152R
A14A1CR326	152-0141-02			SEMICOND DVC,DI:SW,SI,30V,150MA,30V,DO-35	01295	1N4152R
A14A1CR345	152-0141-02			SEMICOND DVC,DI:SW,SI,30V,150MA,30V,DO-35	01295	1N4152R
A14A1CR435	152-0066-00			SEMICOND DVC DI:RECT,SI,400V,1A,D0-41	05828	GP10G-020
A14A1CR436	152-0066-00			SEMICOND DVC DI:RECT,SI,400V,1A,D0-41	05828	GP10G-020
A14A1CR437	152-0066-00			SEMICOND DVC DI:RECT,SI,400V,1A,D0-41	05828	GP10G-020
A14A1CR438	152-0066-00			SEMICOND DVC DI:RECT,SI,400V,1A,D0-41	05828	GP10G-020
A14A1CR439	152-0141-02			SEMICOND DVC,DI:SW,SI,30V,150MA,30V,DO-35	01295	1N4152R
A14A1CR526	152-0141-02			SEMICOND DVC,DI:SW,SI,30V,150MA,30V,DO-35	01295	1N4152R
A14A1CR546	152-0141-02			SEMICOND DVC,DI:SW,SI,30V,150MA,30V,DO-35	01295	1N4152R
A14A1CR629	152-0141-02			SEMICOND DVC,DI:SW,SI,30V,150MA,30V,DO-35	01295	1N4152R
A14A1CR635	152-0066-00			SEMICOND DVC DI:RECT,SI,400V,1A,D0-41	05828	GP10G-020
A14A1CR636	152-0066-00			SEMICOND DVC DI:RECT,SI,400V,1A,D0-41	05828	GP10G-020
A14A1CR637	152-0066-00			SEMICOND DVC DI:RECT,SI,400V,1A,D0-41	05828	GP10G-020
A14A1CR638	152-0066-00			SEMICOND DVC DI:RECT,SI,400V,1A,D0-41	05828	GP10G-020
A14A1CR639	152-0141-02			SEMICOND DVC,DI:SW,SI,30V,150MA,30V,DO-35	01295	1N4152R
A14A1CR726	152-0141-02			SEMICOND DVC,DI:SW,SI,30V,150MA,30V,DO-35	01295	1N4152R
A14A1CR744	152-0141-02			SEMICOND DVC,DI:SW,SI,30V,150MA,30V,DO-35	01295	1N4152R
A14A1CR746	152-0141-02			SEMICOND DVC,DI:SW,SI,30V,150MA,30V,DO-35	01295	1N4152R
A14A1CR835	152-0066-00			SEMICOND DVC DI:RECT,SI,400V,1A,D0-41	05828	GP10G-020

Component No.	Tektronix Part No.	Serial/Model No. Eff	Dscont	Name & Description	Mfr Code	Mfr Part Number
A14A1CR836	152-0066-00			SEMICOND DVC DI:RECT,SI,400V,1A,D0-41	05828	GP10G-020
A14A1CR837	152-0066-00			SEMICOND DVC DI:RECT,SI,400V,1A,D0-41	05828	GP10G-020
A14A1CR838	152-0066-00			SEMICOND DVC DI:RECT,SI,400V,1A,D0-41	05828	GP10G-020
A14A1F152	159-0016-00			FUSE,CARTRIDGE:3AG,1.5A,250V,FAST-BLOW	71400	AGC 1 1/2
A14A1F249	159-0022-00			FUSE,CARTRIDGE:3AG,1A,250V,FAST-BLOW	71400	AGC 1
A14A1F449	159-0016-00			FUSE,CARTRIDGE:3AG,1.5A,250V,FAST-BLOW	71400	AGC 1 1/2
A14A1L151	108-0336-00			COIL,RF:100UH	80009	108-0336-00
A14A1L352	108-0336-00			COIL,RF:100UH	80009	108-0336-00
A14A1L552	108-0336-00			COIL,RF:100UH	80009	108-0336-00
A14A1Q133	151-0216-02			TRANSISTOR:PNP,SI PRESTRESSED & TESTED	80009	151-0216-02
A14A1Q137	151-0261-00			TRANSISTOR:SILICON,PNP,DUAL	04713	SD441
A14A1Q225	151-0701-01			TRANSISTOR:25C2527G,SCREENED	000IG	23C2527-G-TEK2
A14A1Q231	151-0216-02			TRANSISTOR:PNP,SI PRESTRESSED & TESTED	80009	151-0216-02
A14A1Q234	151-0216-02			TRANSISTOR:PNP,SI PRESTRESSED & TESTED	80009	151-0216-02
A14A1Q245	151-0701-01			TRANSISTOR:25C2527G,SCREENED	000IG	23C2527-G-TEK2
A14A1Q332	151-0216-02			TRANSISTOR:PNP,SI PRESTRESSED & TESTED	80009	151-0216-02
A14A1Q335	151-0261-00			TRANSISTOR:SILICON,PNP,DUAL	04713	SD441
A14A1Q337	151-0216-02			TRANSISTOR:PNP,SI PRESTRESSED & TESTED	80009	151-0216-02
A14A1Q339	151-0216-02			TRANSISTOR:PNP,SI PRESTRESSED & TESTED	80009	151-0216-02
A14A1Q425	151-0701-01			TRANSISTOR:25C2527G,SCREENED	000IG	23C2527-G-TEK2
A14A1Q437	151-0216-02			TRANSISTOR:PNP,SI PRESTRESSED & TESTED	80009	151-0216-02
A14A1Q525	151-0701-01			TRANSISTOR:25C2527G,SCREENED	000IG	23C2527-G-TEK2
A14A1Q535	151-0261-00			TRANSISTOR:SILICON,PNP,DUAL	04713	SD441
A14A1Q537	151-0216-02			TRANSISTOR:PNP,SI PRESTRESSED & TESTED	80009	151-0216-02
A14A1Q539	151-0216-02			TRANSISTOR:PNP,SI PRESTRESSED & TESTED	80009	151-0216-02
A14A1Q627	151-0192-03			TRANSISTOR:SILICON,NPN	80009	151-0192-03
A14A1Q637	151-0216-02			TRANSISTOR:PNP,SI PRESTRESSED & TESTED	80009	151-0216-02
A14A1Q645	151-0701-01			TRANSISTOR:25C2527G,SCREENED	000IG	23C2527-G-TEK2
A14A1Q735	151-0261-00			TRANSISTOR:SILICON,PNP,DUAL	04713	SD441
A14A1Q737	151-0216-02			TRANSISTOR:PNP,SI PRESTRESSED & TESTED	80009	151-0216-02
A14A1Q739	151-0216-02			TRANSISTOR:PNP,SI PRESTRESSED & TESTED	80009	151-0216-02
A14A1Q745	151-0192-03			TRANSISTOR:SILICON,NPN	80009	151-0192-03
A14A1Q825	151-0701-01			TRANSISTOR:25C2527G,SCREENED	000IG	23C2527-G-TEK2
A14A1Q845	151-0701-01			TRANSISTOR:25C2527G,SCREENED	000IG	23C2527-G-TEK2
A14A1R122	321-0289-03			RES.,FXD,FILM:10K OHM,0.25%,0.125W	91637	MFF1816D10001C
A14A1R124	321-0698-00			RES.,FXD,FILM:1.89K OHM,0.25%,0.125W	91637	MFF1816C18900C
A14A1R126	321-0193-03			RES.,FXD,FILM:1K OHM,0.25%,0.125W	91637	MFF1816D10000C
A14A1R128	321-0763-07			RES.,FXD,FILM:20.5K OHM,0.1%,0.125W		
A14A1R131	321-0240-00			RES.,FXD,FILM:3.09K OHM,1%,0.125W	91637	MFF1816G30900F
A14A1R133	321-0114-00			RES.,FXD,FILM:150 OHM,1%,0.125W	91637	MFF1816G150R0F
A14A1R134	321-0210-00			RES.,FXD,FILM:1.5K OHM,1%,0.125W	91637	MFF1816G15000F
A14A1R136	321-0698-00			RES.,FXD,FILM:1.89K OHM,0.25%,0.125W	91637	MFF1816C18900C
A14A1R137	321-0289-03			RES.,FXD,FILM:10K OHM,0.25%,0.125W	91637	MFF1816D10001C
A14A1R138	321-0193-03			RES.,FXD,FILM:1K OHM,0.25%,0.125W	91637	MFF1816D10000C
A14A1R141	311-1417-00			RES.,VAR,NONWIR:2.5K OHM,10%,0.25W	73138	72-58-0
A14A1R151	315-0101-00			RES.,FXD,CMPSN:100 OHM,5%,0.25W	01121	CB1015
A14A1R211	308-0441-00			RES.,FXD,WW:3 OHM,5%,3W	91637	CW2B-3R00J
A14A1R214	308-0441-00			RES.,FXD,WW:3 OHM,5%,3W	91637	CW2B-3R00J
A14A1R221	315-0132-00			RES.,FXD,CMPSN:1.3K OHM,5%,0.25W	01121	CB1325
A14A1R222	315-0151-00			RES.,FXD,CMPSN:150 OHM,5%,0.25W	01121	CB1515
A14A1R224	301-0241-00			RES.,FXD,CMPSN:240 OHM,5%,0.5W	01121	EB2415
A14A1R226	308-0833-00	B010100	B020749	RES.,FXD,WW:1.5 OHM,1%,4W	91637	RS21R500F
A14A1R226	308-0799-00	B020750		RES.,FXD,WW:1 OHM,1%,4W	91637	NS21R000F
A14A1R227	315-0103-00			RES.,FXD,CMPSN:10K OHM,5%,0.25W	01121	CB1035

Component No.	Tektronix Part No.	Serial/Model No. Eff	Dscont	Name & Description	Mfr Code	Mfr Part Number
A14A1R231	321-0763-07			RES.,FXD,FILM:20.5K OHM,0.1%,0.125W		
A14A1R232	315-0132-00			RES.,FXD,CMPSN:1.3K OHM,5%,0.25W	01121	CB1325
A14A1R233	315-0151-00			RES.,FXD,CMPSN:150 OHM,5%,0.25W	01121	CB1515
A14A1R234	301-0241-00			RES.,FXD,CMPSN:240 OHM,5%,0.5W	01121	EB2415
A14A1R237	308-0833-00	B010100	B020749	RES.,FXD,WW:1.5 OHM,1%,4W	91637	RS21R500F
A14A1R237	308-0799-00	B020750		RES.,FXD,WW:1 OHM,1%,4W	91637	NS21R000F
A14A1R238	305-0102-00			RES.,FXD,CMPSN:1K OHM,5%,2W	01121	HB1025
A14A1R239	321-0240-00			RES.,FXD,FILM:3.09K OHM,1%,0.125W	91637	MFF1816G30900F
A14A1R321	321-0289-03			RES.,FXD,FILM:10K OHM,0.25%,0.125W	91637	MFF1816D10001C
A14A1R322	321-0698-00			RES.,FXD,FILM:1.89K OHM,0.25%,0.125W	91637	MFF1816C18900C
A14A1R324	321-0193-03			RES.,FXD,FILM:1K OHM,0.25%,0.125W	91637	MFF1816D10000C
A14A1R326	321-0763-07			RES.,FXD,FILM:20.5K OHM,0.1%,0.125W		
A14A1R327	315-0681-00			RES.,FXD,CMPSN:680 OHM,5%,0.25W	01121	CB6815
A14A1R328	315-0750-00			RES.,FXD,CMPSN:75 OHM,5%,0.25W	01121	CB7505
A14A1R331	321-0114-00			RES.,FXD,FILM:150 OHM,1%,0.125W	91637	MFF1816G150R0F
A14A1R332	321-0210-00			RES.,FXD,FILM:1.5K OHM,1%,0.125W	91637	MFF1816G15000F
A14A1R333	321-0698-00			RES.,FXD,FILM:1.89K OHM,0.25%,0.125W	91637	MFF1816C18900C
A14A1R335	321-0289-03			RES.,FXD,FILM:10K OHM,0.25%,0.125W	91637	MFF1816D10001C
A14A1R336	321-0193-03			RES.,FXD,FILM:1K OHM,0.25%,0.125W	91637	MFF1816D10000C
A14A1R338	321-0763-07			RES.,FXD,FILM:20.5K OHM,0.1%,0.125W		
A14A1R339	315-0681-00			RES.,FXD,CMPSN:680 OHM,5%,0.25W	01121	CB6815
A14A1R342	311-1417-00			RES.,VAR,NONWIR:2.5K OHM,10%,0.25W	73138	72-58-0
A14A1R355	315-0101-00			RES.,FXD,CMPSN:100 OHM,5%,0.25W	01121	CB1015
A14A1R411	308-0441-00			RES.,FXD,WW:3 OHM,5%,3W	91637	CW2B-3R00J
A14A1R413	308-0441-00			RES.,FXD,WW:3 OHM,5%,3W	91637	CW2B-3R00J
A14A1R422	301-0241-00			RES.,FXD,CMPSN:240 OHM,5%,0.5W	01121	EB2415
A14A1R424	308-0833-00			RES.,FXD,WW:1.5 OHM,1%,4W	91637	RS21R500F
A14A1R427	315-0103-00			RES.,FXD,CMPSN:10K OHM,5%,0.25W	01121	CB1035
A14A1R429	321-0289-03			RES.,FXD,FILM:10K OHM,0.25%,0.125W	91637	MFF1816D10001C
A14A1R431	315-0750-00			RES.,FXD,CMPSN:75 OHM,5%,0.25W	01121	CB7505
A14A1R433	301-0241-00			RES.,FXD,CMPSN:240 OHM,5%,0.5W	01121	EB2415
A14A1R435	308-0833-00			RES.,FXD,WW:1.5 OHM,1%,4W	91637	RS21R500F
A14A1R436	305-0152-00			RES.,FXD,CMPSN:1.5K OHM,5%,2W	01121	HB1525
A14A1R438	321-0240-00			RES.,FXD,FILM:3.09K OHM,1%,0.125W	91637	MFF1816G30900F
A14A1R439	321-0114-00			RES.,FXD,FILM:150 OHM,1%,0.125W	91637	MFF1816G150R0F
A14A1R521	321-0698-00			RES.,FXD,FILM:1.89K OHM,0.25%,0.125W	91637	MFF1816C18900C
A14A1R522	321-0193-03			RES.,FXD,FILM:1K OHM,0.25%,0.125W	91637	MFF1816D10000C
A14A1R526	321-0763-07			RES.,FXD,FILM:20.5K OHM,0.1%,0.125W		
A14A1R527	315-0681-00			RES.,FXD,CMPSN:680 OHM,5%,0.25W	01121	CB6815
A14A1R528	315-0750-00			RES.,FXD,CMPSN:75 OHM,5%,0.25W	01121	CB7505
A14A1R531	321-0210-00			RES.,FXD,FILM:1.5K OHM,1%,0.125W	91637	MFF1816G15000F
A14A1R532	321-0698-00			RES.,FXD,FILM:1.89K OHM,0.25%,0.125W	91637	MFF1816C18900C
A14A1R534	321-0289-03			RES.,FXD,FILM:10K OHM,0.25%,0.125W	91637	MFF1816D10001C
A14A1R536	321-0193-03			RES.,FXD,FILM:1K OHM,0.25%,0.125W	91637	MFF1816D10000C
A14A1R537	321-0763-07			RES.,FXD,FILM:20.5K OHM,0.1%,0.125W		
A14A1R539	315-0681-00			RES.,FXD,CMPSN:680 OHM,5%,0.25W	01121	CB6815
A14A1R542	311-1417-00			RES.,VAR,NONWIR:2.5K OHM,10%,0.25W	73138	72-58-0
A14A1R556	315-0101-00			RES.,FXD,CMPSN:100 OHM,5%,0.25W	01121	CB1015
A14A1R611	308-0441-00			RES.,FXD,WW:3 OHM,5%,3W	91637	CW2B-3R00J
A14A1R613	308-0441-00			RES.,FXD,WW:3 OHM,5%,3W	91637	CW2B-3R00J
A14A1R622	301-0241-00			RES.,FXD,CMPSN:240 OHM,5%,0.5W	01121	EB2415
A14A1R624	308-0833-00			RES.,FXD,WW:1.5 OHM,1%,4W	91637	RS21R500F
A14A1R627	315-0103-00			RES.,FXD,CMPSN:10K OHM,5%,0.25W	01121	CB1035
A14A1R629	321-0289-03			RES.,FXD,FILM:10K OHM,0.25%,0.125W	91637	MFF1816D10001C

Component No.	Tektronix Part No.	Serial/Model No. Eff	Dscont	Name & Description	Mfr Code	Mfr Part Number
A14A1R631	315-0750-00			RES.,FXD,CMPSN:75 OHM,5%,0.25W	01121	CB7505
A14A1R633	301-0241-00			RES.,FXD,CMPSN:240 OHM,5%,0.5W	01121	EB2415
A14A1R635	308-0833-00			RES.,FXD,WW:1.5 OHM,1%,4W	91637	RS21R500F
A14A1R636	305-0152-00			RES.,FXD,CMPSN:1.5K OHM,5%,2W	01121	HB1525
A14A1R637	321-0240-00			RES.,FXD,FILM:3.09K OHM,1%,0.125W	91637	MFF1816G30900F
A14A1R648	311-1417-00			RES.,VAR,NONWIR:2.5K OHM,10%,0.25W	73138	72-58-0
A14A1R721	321-0698-00			RES.,FXD,FILM:1.89K OHM,0.25%,0.125W	91637	MFF1816C18900C
A14A1R722	321-0193-03			RES.,FXD,FILM:1K OHM,0.25%,0.125W	91637	MFF1816D10000C
A14A1R726	321-0763-07			RES.,FXD,FILM:20.5K OHM,0.1%,0.125W		
A14A1R728	315-0471-00			RES.,FXD,CMPSN:470 OHM,5%,0.25W	01121	CB4715
A14A1R729	315-0470-00			RES.,FXD,CMPSN:47 OHM,5%,0.25W	01121	CB4705
A14A1R730	321-0114-00			RES.,FXD,FILM:150 OHM,1%,0.125W	91637	MFF1816G150R0F
A14A1R731	321-0210-00			RES.,FXD,FILM:1.5K OHM,1%,0.125W	91637	MFF1816G15000F
A14A1R732	321-0698-00			RES.,FXD,FILM:1.89K OHM,0.25%,0.125W	91637	MFF1816C18900C
A14A1R734	321-0289-03			RES.,FXD,FILM:10K OHM,0.25%,0.125W	91637	MFF1816D10001C
A14A1R736	321-0193-03			RES.,FXD,FILM:1K OHM,0.25%,0.125W	91637	MFF1816D10000C
A14A1R738	321-0763-07			RES.,FXD,FILM:20.5K OHM,0.1%,0.125W		
A14A1R739	315-0471-00			RES.,FXD,CMPSN:470 OHM,5%,0.25W	01121	CB4715
A14A1R744	315-0331-00			RES.,FXD,CMPSN:330 OHM,5%,0.25W	01121	CB3315
A14A1R811	308-0441-00			RES.,FXD,WW:3 OHM,5%,3W	91637	CW2B-3R00J
A14A1R813	308-0441-00			RES.,FXD,WW:3 OHM,5%,3W	91637	CW2B-3R00J
A14A1R820	315-0331-00			RES.,FXD,CMPSN:330 OHM,5%,0.25W	01121	CB3315
A14A1R822	301-0241-00			RES.,FXD,CMPSN:240 OHM,5%,0.5W	01121	EB2415
A14A1R824	308-0799-00			RES.,FXD,WW:1 OHM,1%,4W	91637	NS21R000F
A14A1R827	315-0103-00			RES.,FXD,CMPSN:10K OHM,5%,0.25W	01121	CB1035
A14A1R831	315-0470-00			RES.,FXD,CMPSN:47 OHM,5%,0.25W	01121	CB4705
A14A1R832	301-0241-00			RES.,FXD,CMPSN:240 OHM,5%,0.5W	01121	EB2415
A14A1R834	308-0799-00			RES.,FXD,WW:1 OHM,1%,4W	91637	NS21R000F
A14A1R836	305-0102-00			RES.,FXD,CMPSN:1K OHM,5%,2W	01121	HB1025
A14A1U927	156-0285-01			MICROCIRCUIT,LI:VOLTAGE REGULATOR,CHK	04713	MC7812CTD
A14A1U933	156-0872-01			MICROCIRCUIT,LI:VOLTAGE REGULATOR	04713	MC7912CTD
A14A1U947	156-0277-01			MICROCIRCUIT,LI:POSITIVE VOLTAGE REG	04713	MC7805CTD

Component No.	Tektronix Part No.	Serial/Model No. Eff	Dscont	Name & Description	Mfr Code	Mfr Part Number
				CHASSIS PARTS		
F100	159-0021-00			FUSE,CARTRIDGE:3AG,2A,250V,FAST-BLOW	71400	AGC 2
F100	159-0107-00			FUSE,CARTRIDGE:2A,250V,10 SEC	000HX	SD6-2A
F100	----- -----			(OPTIONS A1,A2,A3)		
F101	159-0014-00			FUSE,CARTRIDGE:3AG,5A,250V,FAST-BLOW	71400	MTH5
F101	159-0190-00			FUSE,CARTRIDGE:5 X 20MM,3.15A,250V,50MS	75915	212003
F101	----- -----			(OPTIONS A1,A2,A3)		
F101	159-0015-00			FUSE,CARTRIDGE:3AG,3A,250V,0.65 SEC	71400	AGC 3
F101	----- -----			(OPTION A4)		
L139	108-1074-00			COIL,DEGAUSSING:	80009	108-1074-00
R100	119-1639-00	B020529		RES.,BLEEDER:HIGH VOLTAGE LEAD		
S100	366-1872-01			KNOB:BLACK W/YELLOW STRIPE,PWR	80009	366-1872-01
S101	366-1872-00			KNOB:BLACK,DEGAUSS,0.128 ID X 0.	80009	366-1872-00
V100	119-1522-00			CRT ASSEMBLY:	80009	119-1522-00
V100	119-1523-00			CRT ASSEMBLY:	80009	119-1523-00
V100	----- -----			(OPTION 25 ONLY)		
V100	119-1524-00			CRT ASSEMBLY:	80009	119-1524-00
V100	----- -----			(OPTION 26 ONLY)		
V100	119-1546-00			CRT ASSEMBLY:	80009	119-1546-00
V100	----- -----			(OPTION 27 ONLY)		

COLOR CODE 1861-20 A

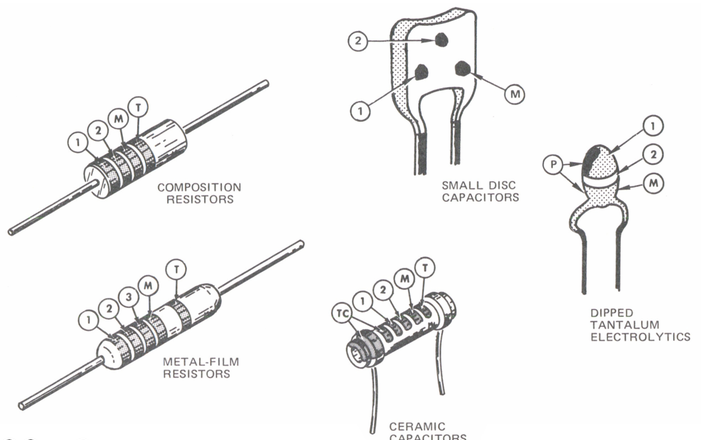

(1) (2) and (3) — 1st, 2nd, and 3rd significant figures
(M) —multiplier (T) —tolerance
(TC) —temperature coefficient
(P) —polarity and voltage rating

(T) and/or (TC) color code may not be present on some capacitors

COLOR	SIGNIFICANT FIGURES	RESISTORS		CAPACITORS			DIPPED TANTALUM VOLTAGE RATING
		MULTIPLIER	TOLERANCE	MULTIPLIER	TOLERANCE over 10 pF	TOLERANCE under 10 pF	
BLACK	0	1	———	1	±20%	±2 pF	4 VDC
BROWN	1	10	±1%	10	±1%	±0.1 pF	6 VDC
RED	2	10^2 or 100	±2%	10^2 or 100	±2%	———	10 VDC
ORANGE	3	10^3 or 1 K	±3%	10^3 or 1000	±3%	———	15 VDC
YELLOW	4	10^4 or 10 K	±4%	10^4 or 10,000	+100% −9%	———	20 VDC
GREEN	5	10^5 or 100 K	±½%	10^5 or 100,000	±5%	±0.5 pF	25 VDC
BLUE	6	10^6 or 1 M	±¼%	10^6 or 1,000,000	———	———	35 VDC
VIOLET	7	———	±1/10%	———	———	———	50 VDC
GRAY	8	———	———	10^{-2} or 0.01	+80% −20%	±0.25 pF	———
WHITE	9	———	———	10^{-1} or 0.1	±10%	±1 pF	3 VDC
GOLD	–	10^{-1} or 0.1	±5%	———	———	———	———
SILVER	–	10^{-2} or 0.01	±10%	———	———	———	———
NONE	–	———	±20%	———	±10%	±1 pF	———

DIAGRAMS AND CIRCUIT BOARD ILLUSTRATIONS

Symbols

Graphic symbols and class designation letters are based on ANSI Standard Y32.2-1975.

Logic symbology is based on ANSI Y32.14-1973 in terms of positive logic. Logic symbols depict the logic function performed and may differ from the manufacturer's data.

The overline on a signal name indicates that the signal performs its intended function when it is in the low state.

Abbreviations are based on ANSI Y1.1-1972.

Other ANSI standards that are used in the preparation of diagrams by Tektronix, Inc. are:

Y14.15, 1966 Drafting Practices.
Y14.2, 1973 Line Conventions and Lettering.
Y10.5, 1968 Letter Symbols for Quantities Used in Electrical Science and Electrical Engineering.

American National Standard Institute
1430 Broadway
New York, New York 10018

Component Values

Electrical components shown on the diagrams are in the following units unless noted otherwise:

Capacitors = Values one or greater are in picofarads (pF). Values less than one are in microfarads (μF).
Resistors = Ohms (Ω).

The information and special symbols below may appear in this manual.

Assembly Numbers and Grid Coordinates

Each assembly in the instrument is assigned an assembly number (e.g., A20). The assembly number appears on the circuit board outline on the diagram, in the title for the circuit board component location illustration, and in the lookup table for the schematic diagram and corresponding component locator illustration. The Replaceable Electrical Parts list is arranged by assemblies in numerical sequence; the components are listed by component number •(see following illustration for constructing a component number).

The schematic diagram and circuit board component location illustration have grids. A lookup table with the grid coordinates is provided for ease of locating the component. Only the components illustrated on the facing diagram are listed in the lookup table. When more than one schematic diagram is used to illustrate the circuitry on a circuit board, the circuit board illustration may only appear opposite the first diagram on which it was illustrated; the lookup table will list the diagram number of other diagrams that the circuitry of the circuit board appears on.

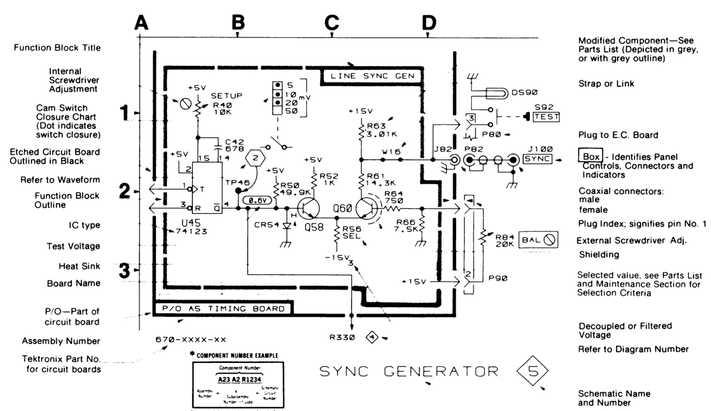

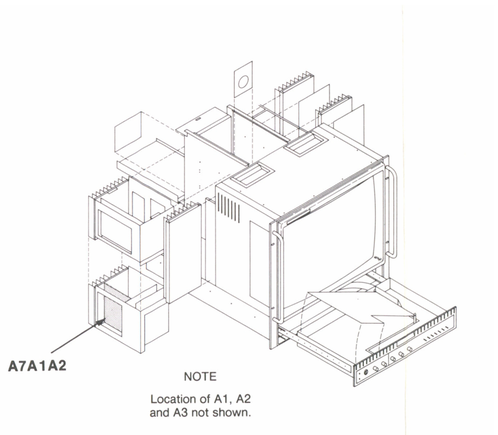

CIRCUIT BOARD LOCATOR ILLUSTRATION

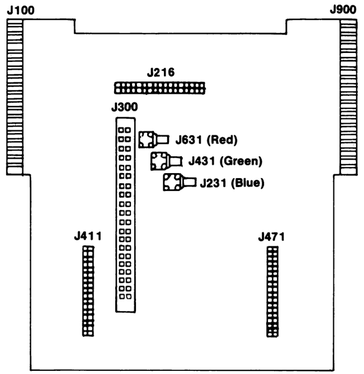

CENTER INTERCONNECT—A1

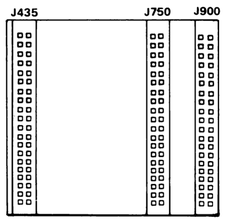

LEFT INTERCONNECT—A3

TOP

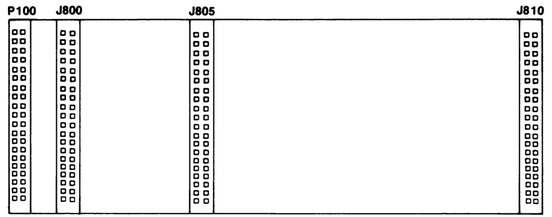

RIGHT INTERCONNECT—A2

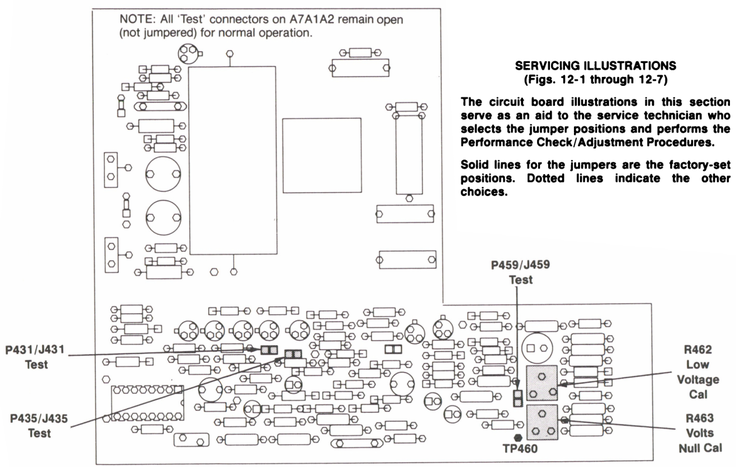

POWER SUPPLY INVERTER—A7A1A2

SERVICING ILLUSTRATIONS
(Figs. 12-1 through 12-7)

The circuit board illustrations in this section serve as an aid to the service technician who selects the jumper positions and performs the Performance Check/Adjustment Procedures.

Solid lines for the jumpers are the factory-set positions. Dotted lines indicate the other choices.

FIG. 12-1. CONNECTOR, TEST POINT & ADJUSTMENT LOCATIONS FOR A1, A2, A3 & A7A1A2.

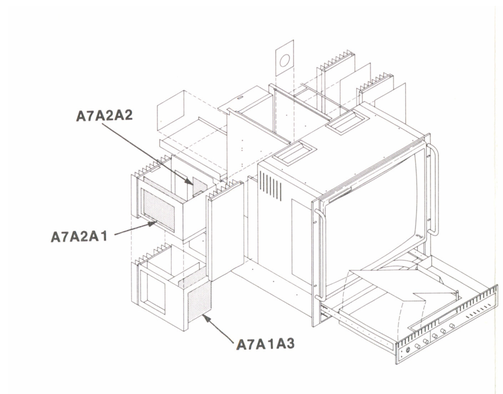

CIRCUIT BOARD LOCATOR ILLUSTRATION

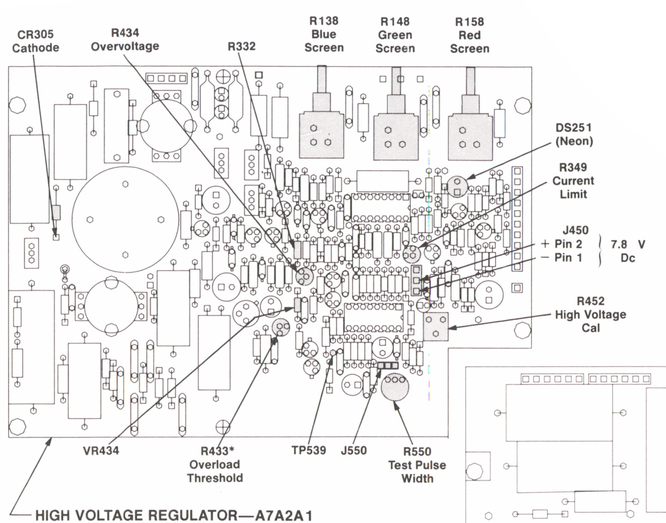

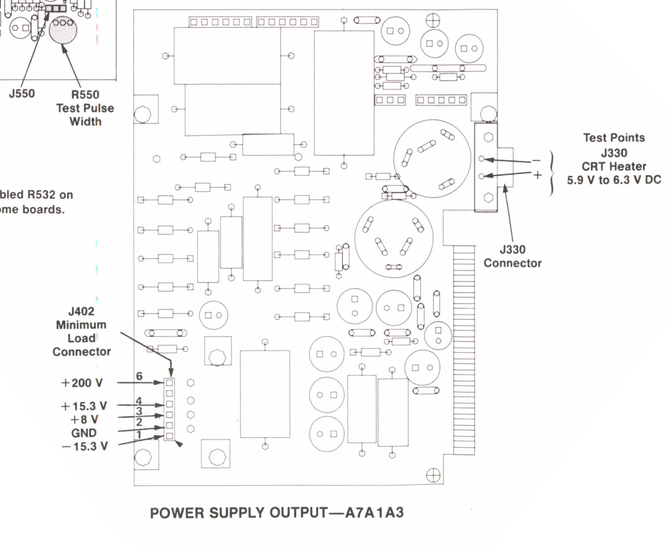

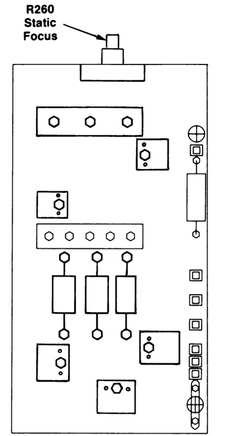

FIG. 12-2. CONNECTOR, TEST POINT & ADJUSTMENT LOCATIONS FOR A7A1A3, A7A2A1 & A7A2A2.

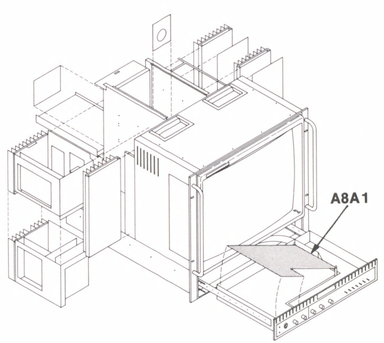

CIRCUIT BOARD LOCATOR ILLUSTRATION

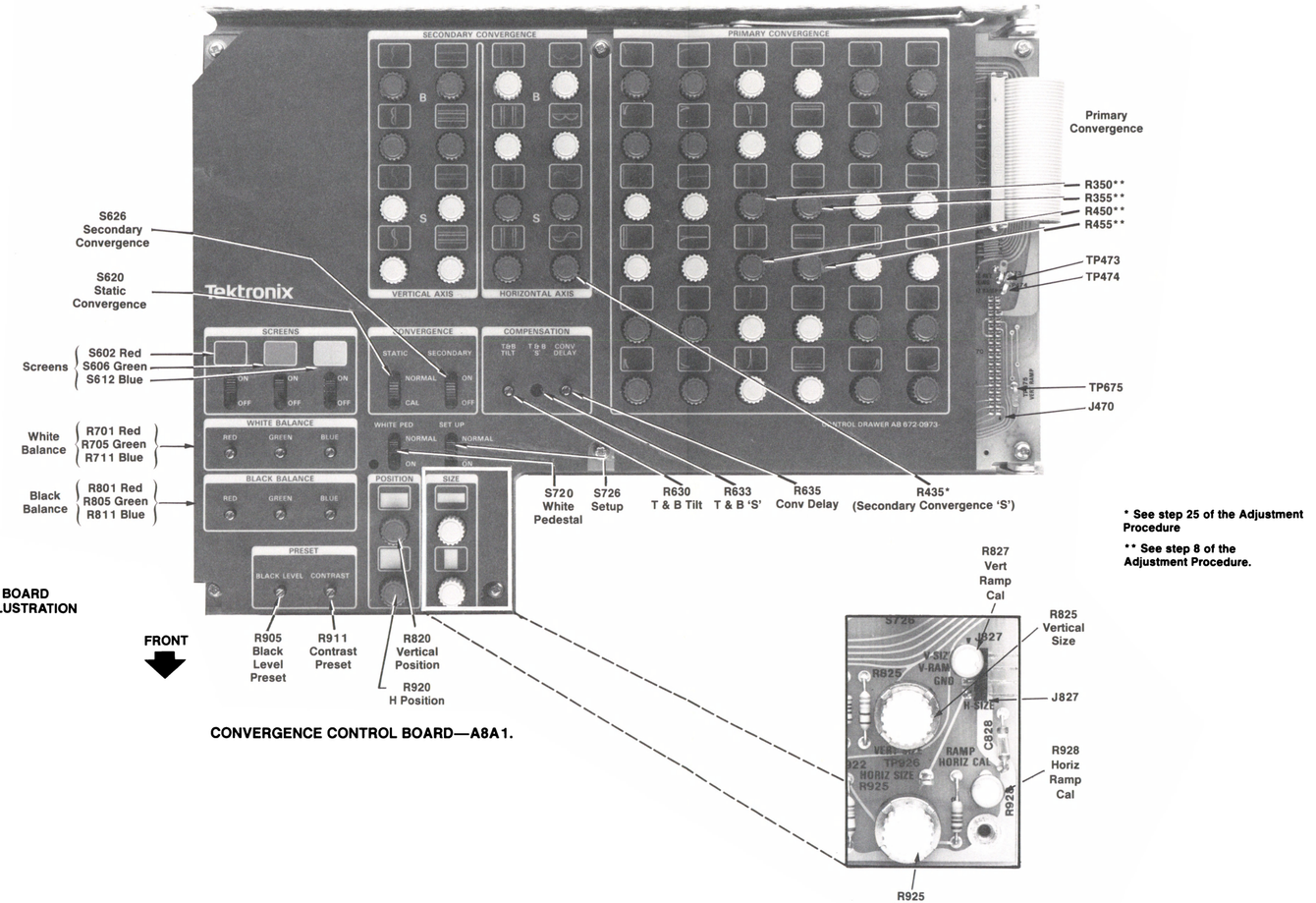

CONVERGENCE CONTROL BOARD—A8A1.

* See step 25 of the Adjustment Procedure

** See step 8 of the Adjustment Procedure.

FIG. 12-3. CONNECTOR, TEST POINT & ADJUSTMENT LOCATIONS FOR THE CONVERGENCE CONTROL BOARD—A8A1. (Also, refer to Fig. 2-2 in Section 2 and Fig. 7-11 in Section 7 of this manual.)

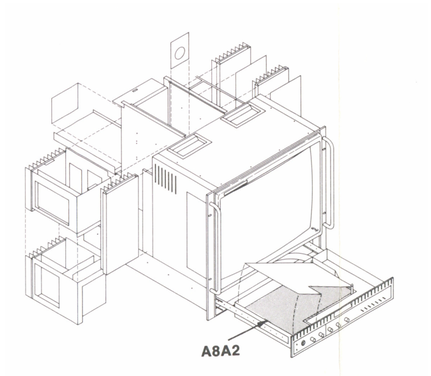

CIRCUIT BOARD LOCATOR ILLUSTRATION

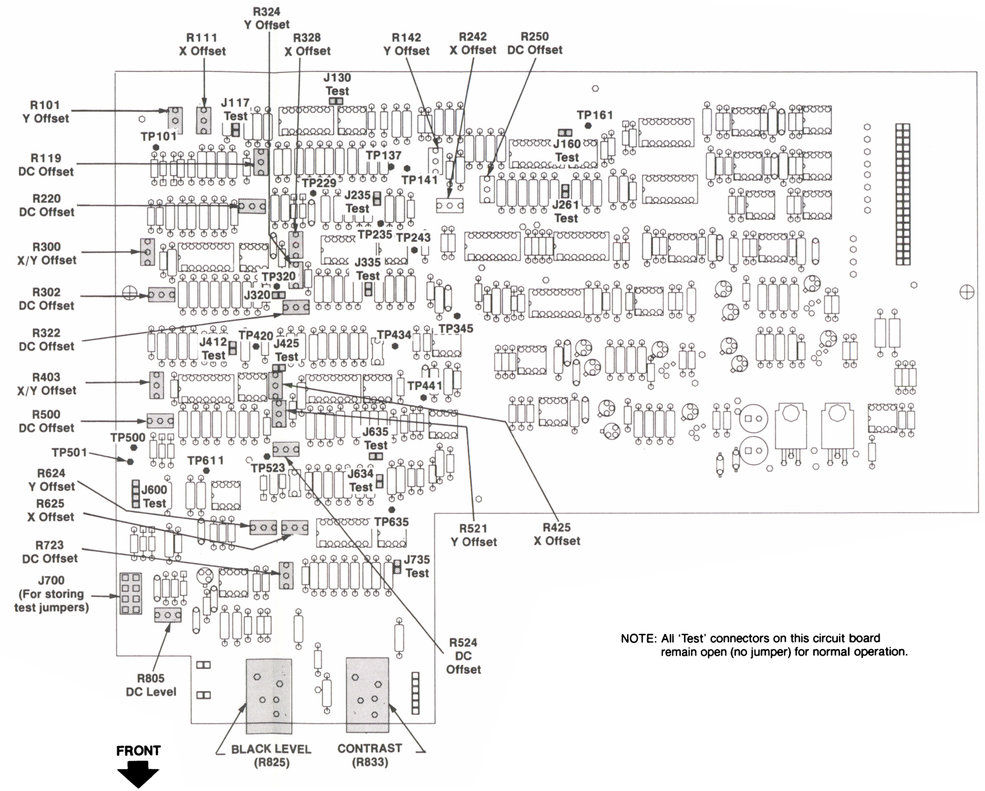

NOTE: All 'Test' connectors on this circuit board remain open (no jumper) for normal operation.

CONVERGENCE GENERATOR BOARD—A8A2

FIG. 12-4. CONNECTOR, TEST POINT & ADJUSTMENT LOCATIONS FOR THE CONVERGENCE GENERATOR BOARD—A8A2.

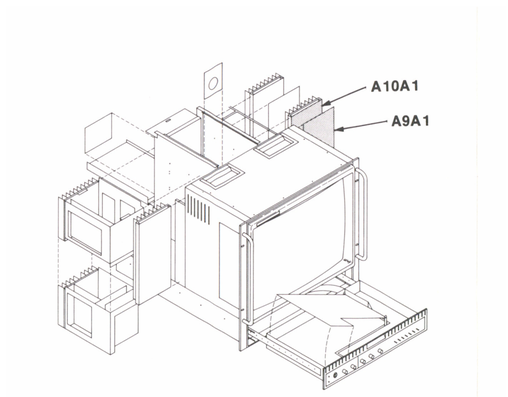

CIRCUIT BOARD LOCATOR ILLUSTRATION

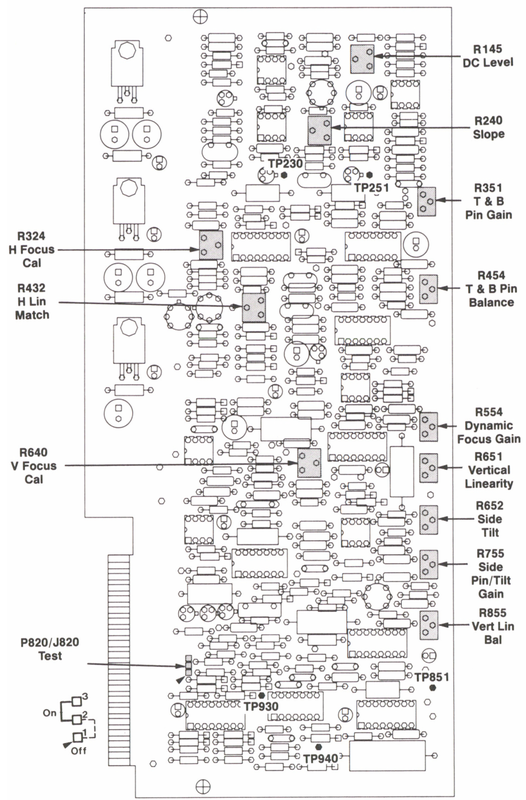

RASTER CONTROL-A9A1

UP

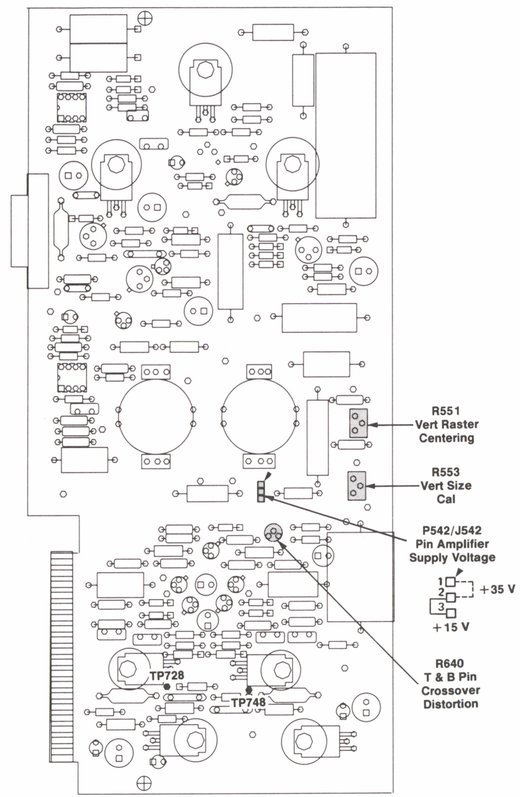

VERTICAL DEFLECTION—A10A1

FIG. 12-5. CONNECTOR, TEST POINT & ADJUSTMENT LOCATIONS FOR THE A9A1 & A10A1.

NOTES

Jumpers P105 and P205 may be set to either position. Refer to Section 7, step 20, in the Adjustment Procedure.

Jumpers P405 and P505 are shown in the TV Mode. Leave these jumpers as illustrated.

P205, P405, and P505 are single-unit multi-pin jumper connectors.

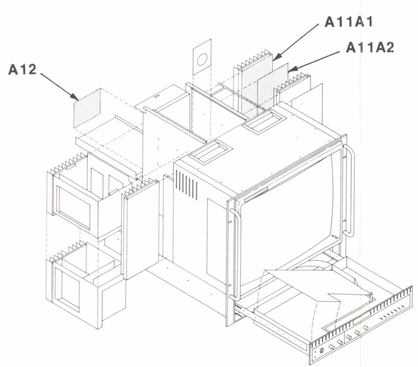

CIRCUIT BOARD LOCATOR ILLUSTRATION

NOTE

Jumpers P120, P720 P307, P105, P205A, P405, and P505 are shown set for a 15.7 kHz scan rate.

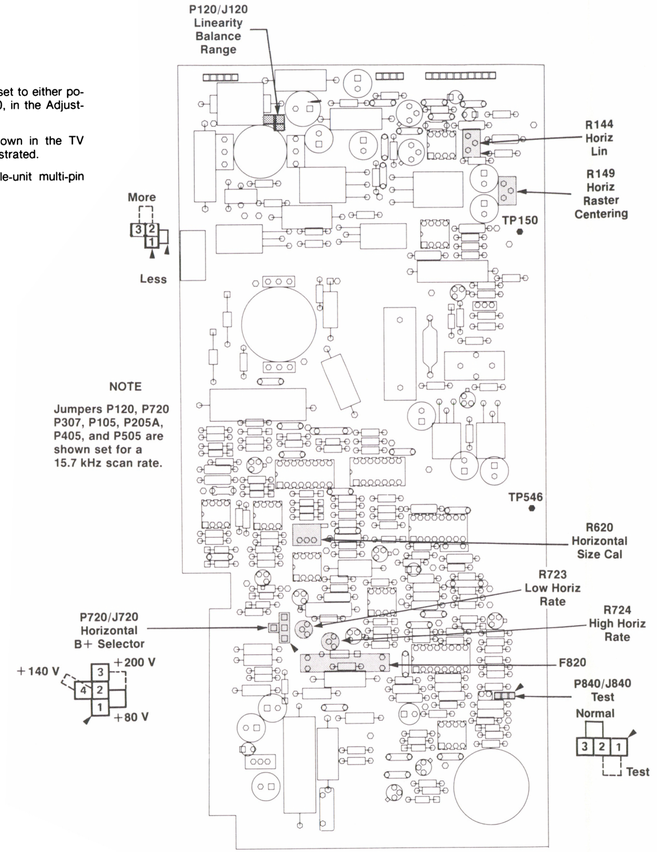

HORIZONTAL DEFLECTION—A11A1

UP

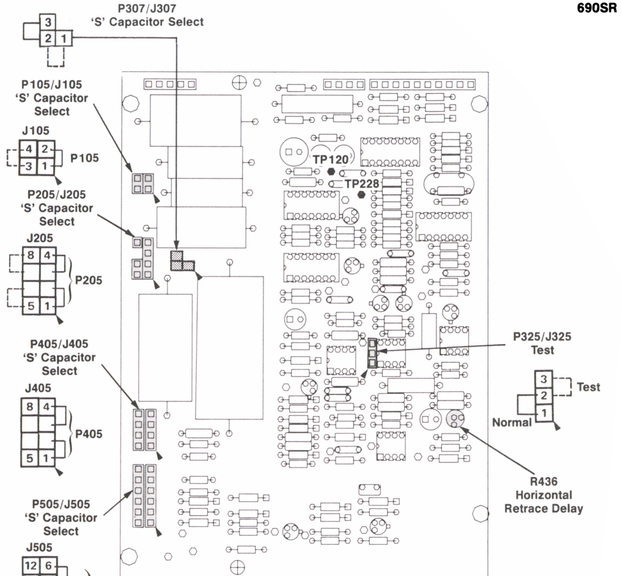

HORIZONTAL DELAY STABILIZER—A11A2

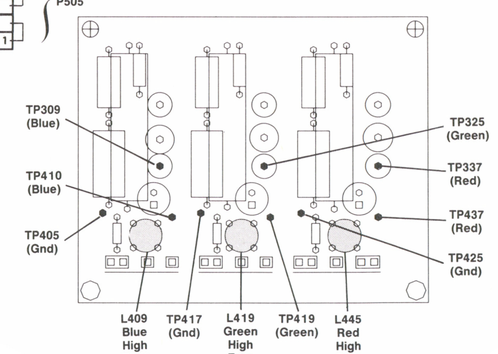

CRT SOCKET—A12

FIG. 12-6. CONNECTOR, TEST POINT & ADJUSTMENT LOCATIONS FOR A11A1, A11A2 & A12.

3821-124

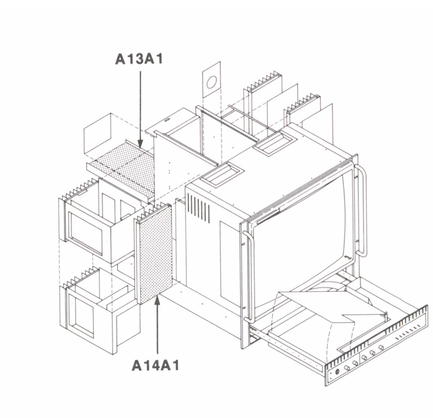

FRONT
(When opened)

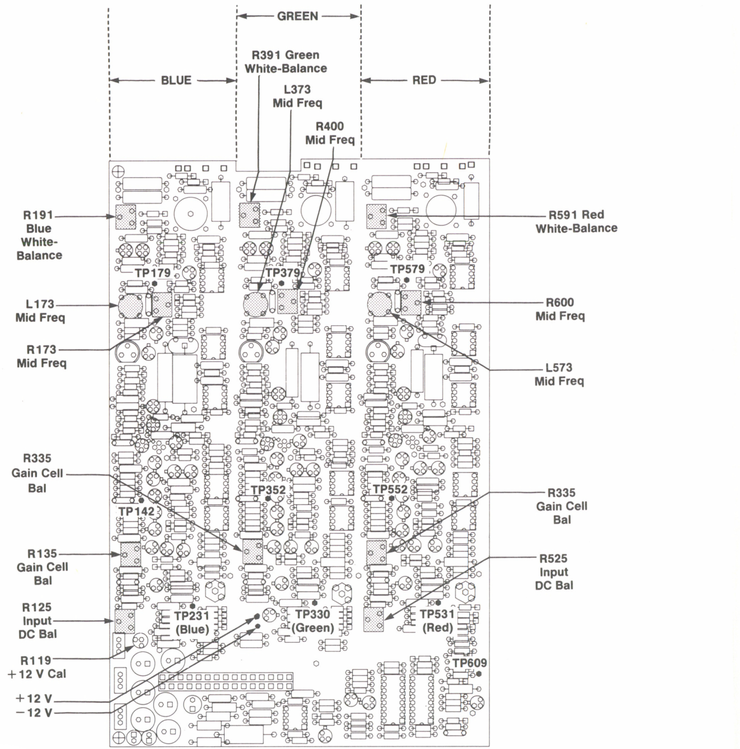

VIDEO AMPLIFIER—A13A1

UP

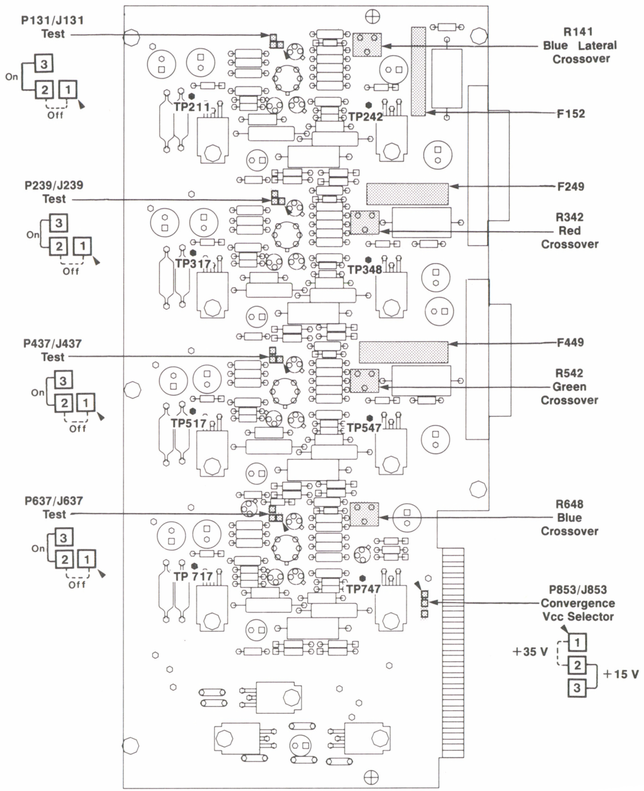

CONVERGENCE OUTPUT—A14A1

CIRCUIT BOARD LOCATOR ILLUSTRATION

FIG. 12-7. CONNECTOR, TEST POINT & ADJUSTMENT LOCATIONS FOR A13A1 & A14A1.

@

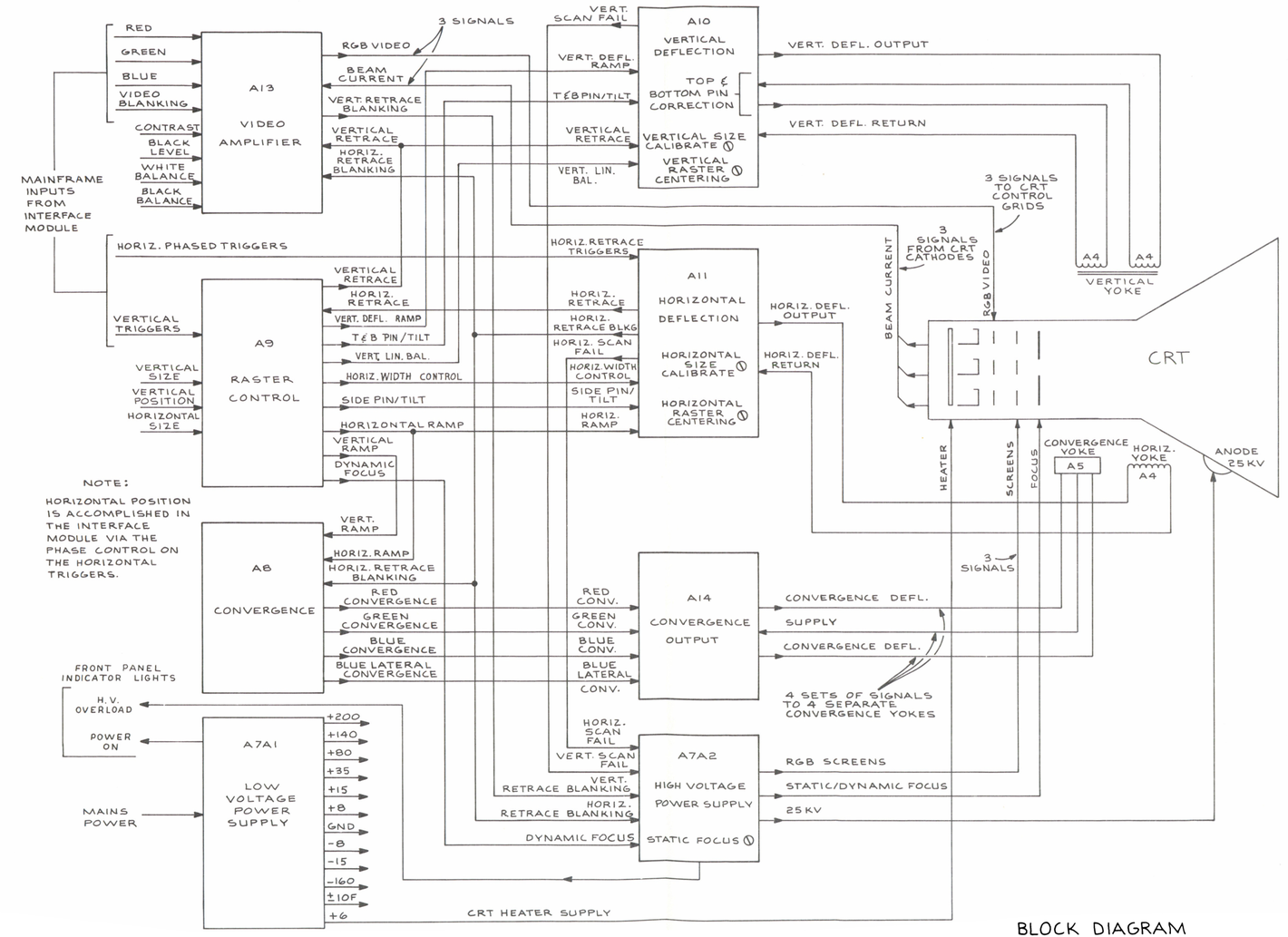

690SR TV COLOR MONITOR @ 3821-03

BLOCK DIAGRAM

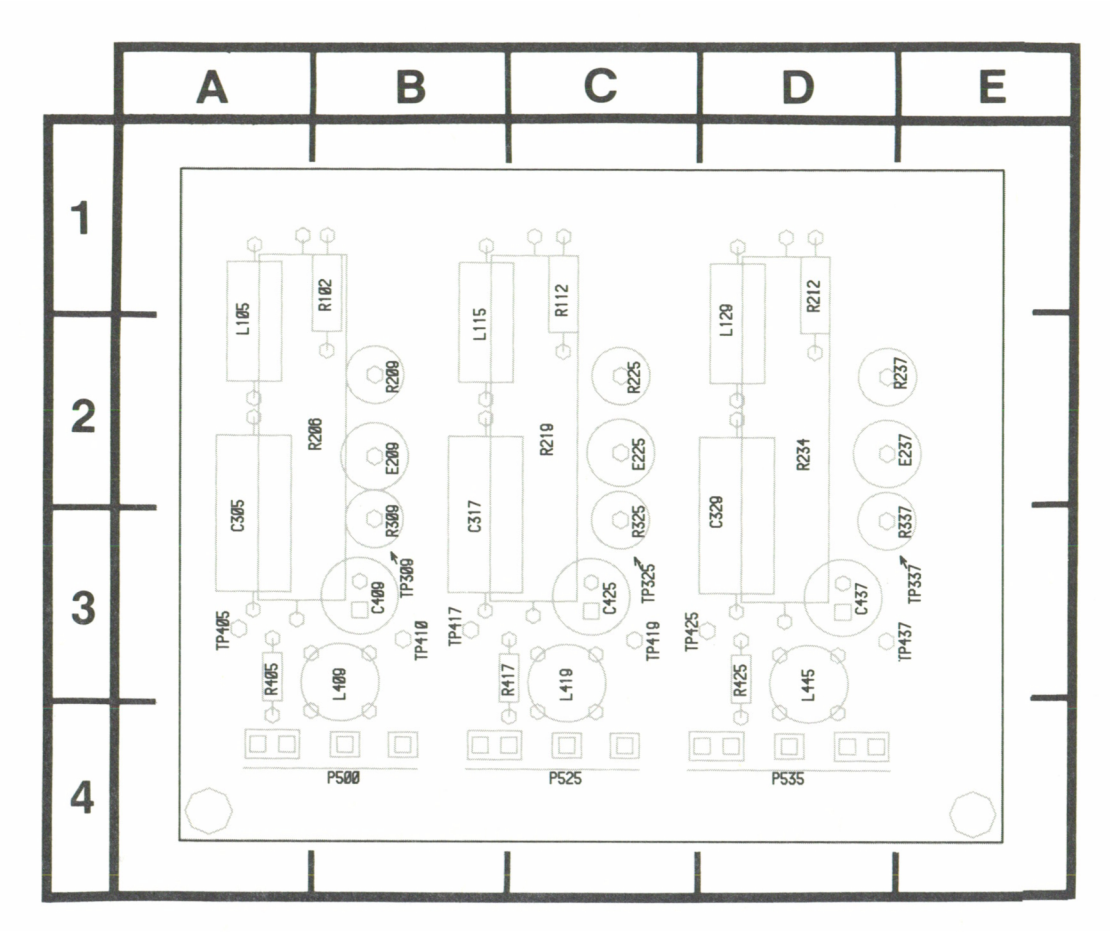

Fig. 12-8. A12 CRT Socket Board.

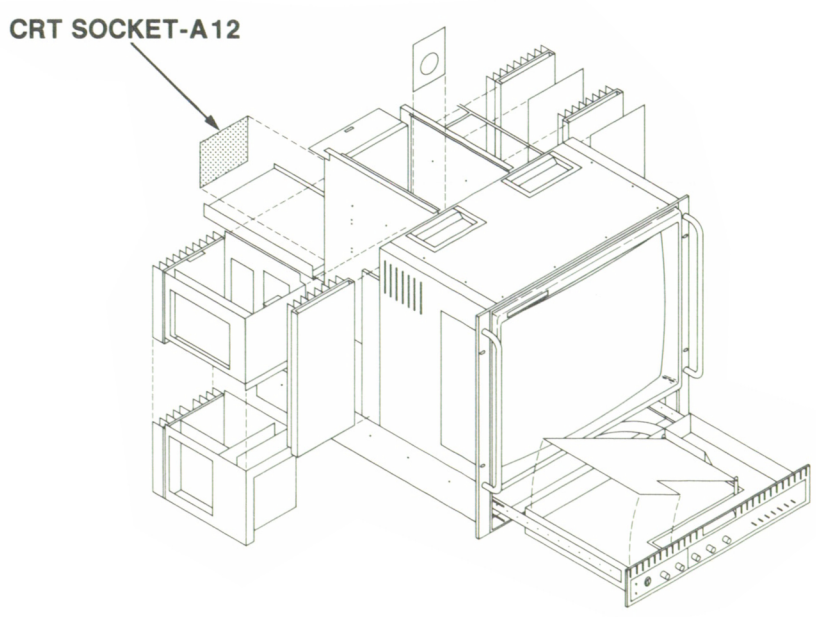

Static Sensitive Devices
See Maintenance Section

COMPONENT NUMBER EXAMPLE

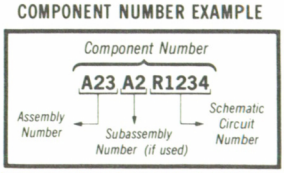

Chassis-mounted components have no Assembly Number prefix—see end of Replaceable Electrical Parts List.

@

3821-126

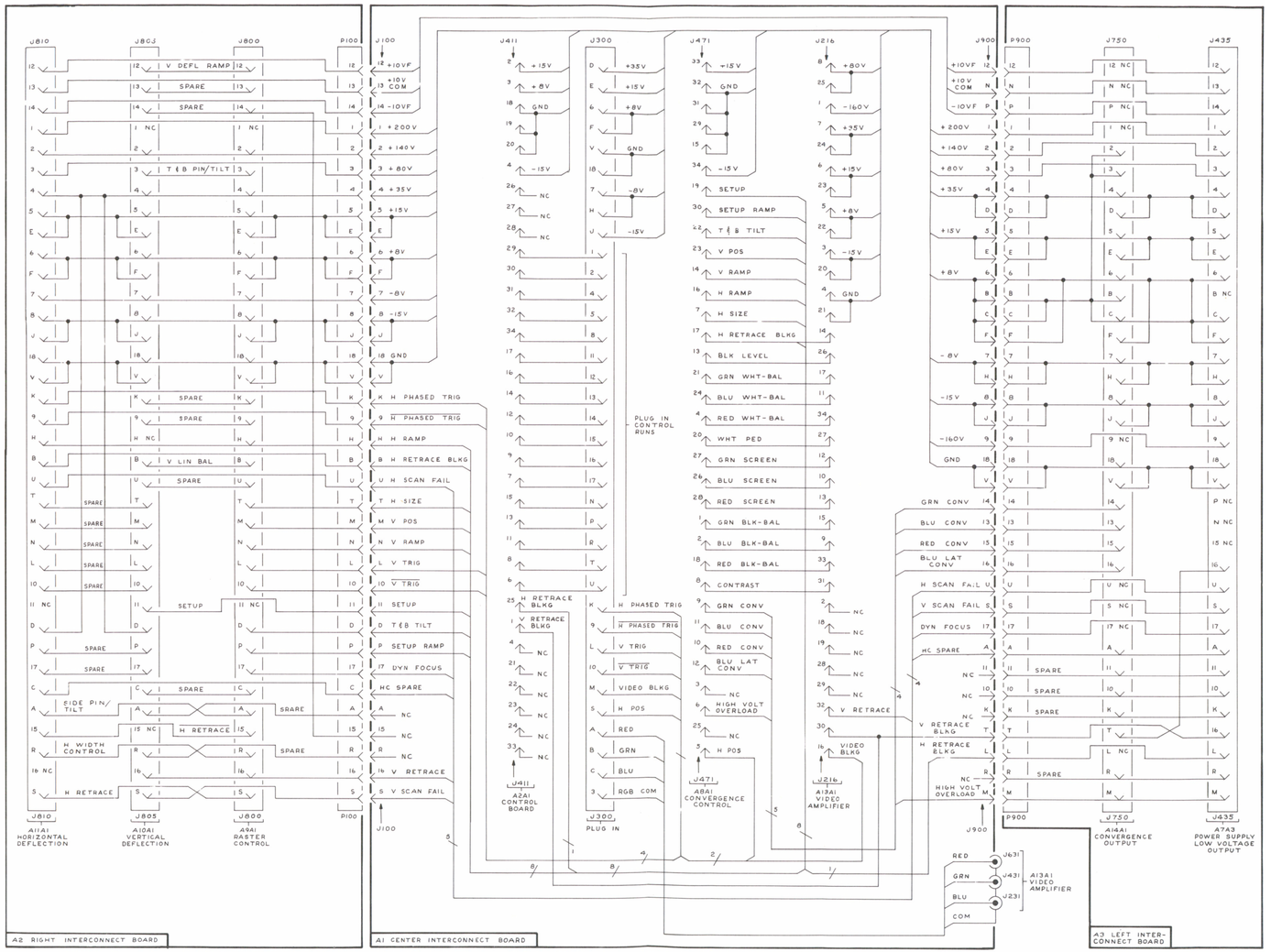

690SR TV COLOR MONINTOR

@ 3821-160

INTERCONNECT SYSTEM ①

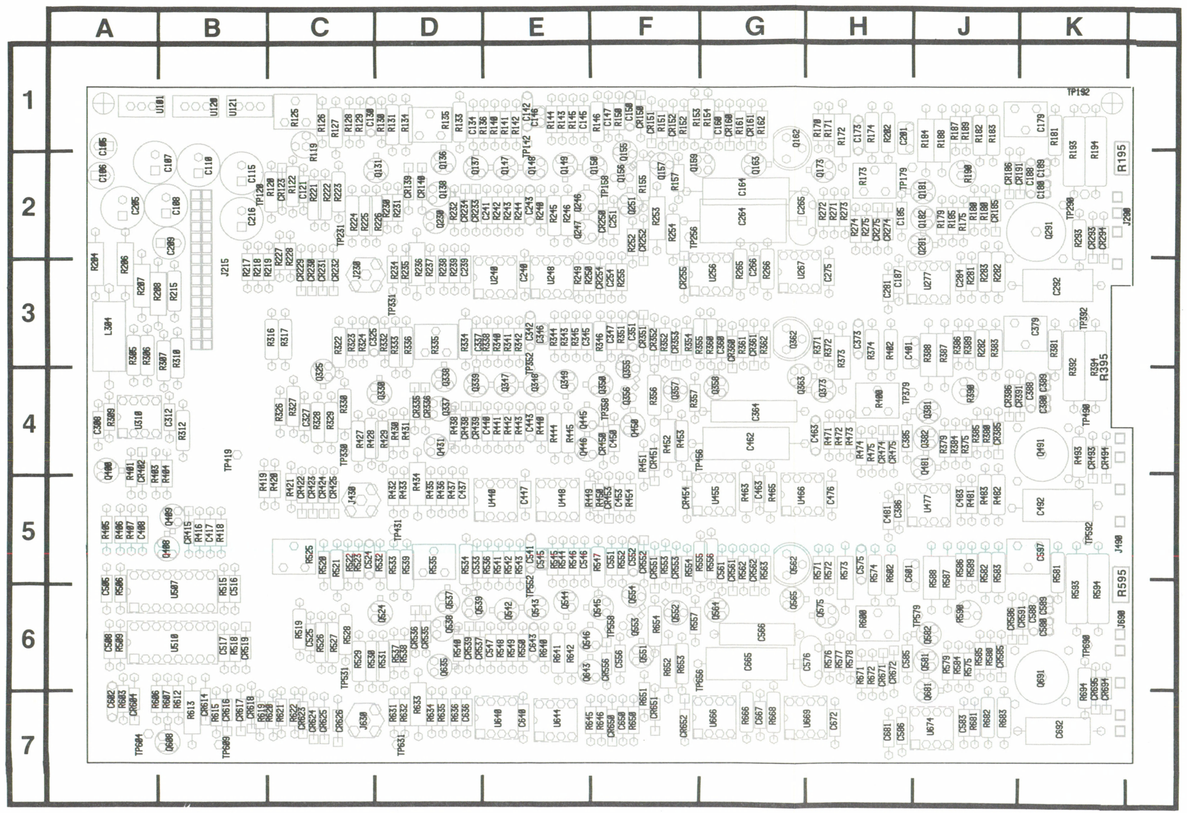

COMPONENT NUMBER EXAMPLE

Component Number

A23 A2 R1234

Assembly Number → Subassembly Number (if used) → Schematic Circuit Number

Chassis-mounted components have no Assembly Number prefix—see end of Replaceable Electrical Parts List.

Static Sensitive Devices
See Maintenance Section

Fig. 12-9A. A13A1 Video Amplifier boards (SNB010131 & UP).

REV JUN 1984

GREEN VIDEO AMPLIFIER DIAGRAM 2

ASSEMBLY A13A1

Partial A13A1 also shown on diagrams 3 and 4.

CIRCUIT NUMBER	SCHEM LOCATION	BOARD LOCATION
C105	C2	A1
C106	C1	A1
C107	A1	A2
C108	A1	B2
C110	A3	B2
C115	C1	B2
C205	A1	A2
C209	A1	B2
C216	A3	B2
C308	A2	A4
C312	A2	B4
C325	C3	D3
C327	D1	C4
C337	E2	D3
C342	C3	E3
C345	F1	E3
C347	E1	F3
C351	E2	F3
C360	F4	G3
C364	G5	G4
C373	F1	H4
C379	**G2**	**J4**
C380	**G2**	**J4**
C383	G1	J4
C386	G2	J5
C388	**G2**	**J4**
C408	C4	A5
C417	C4	B5
C437	D1	D5
C440	E3	E4
C447	E1	E5
C450	E3	F4
C453	D1	F5
C462	G5	G4
C463	F4	G5
C476	F5	H5
C481	G1	H5
C492	G1	K5
C505	B4	A6
C508	B4	A6
C516	C5	B6
C517	B5	B6
C602	A4	A7
CR123	B1	C2
CR335	D3	D4
CR336	D2	D4
CR351	F3	F3
CR352	F3	F3
CR353	F3	F3
CR360	F4	G3
CR361	G4	G3
CR385	F1	J4
CR386	G1	J4
CR391	G2	J4
CR402	B3	A4
CR415	C4	B5
CR422	B3	C5
CR423	B3	C5
CR424	B3	C5
CR425	B4	C5
CR438	E2	D4
CR439	E2	E4
CR450	E1	F4
CR451	F5	F4
CR453	E3	F5
CR454	F5	F5
CR474	E5	H4
CR475	E5	H4
CR477	F1	J4
CR481	G1	J5
CR482	G1	J5
CR493	G1	K4
CR494	G1	K4
CR604	A4	A7
CR614	C5	B7
CR616	B4	B7
CR617	B3	B7
CR618	B3	B7
CR624	A4	C7
J215	A1	B3
J215	A3	B3
J215	A5	B3
J215	B3	B3
J215	D1	B3
J430	C2	C5
J490	G1	K5
J490	G5	K5
L304	A1	A3
L373	F1	H3
Q325	C3	C4
Q330	C2	D4
Q337	D3	D4
Q338	D2	D4
Q339	D2	D4
Q347	E3	E4
Q348	E3	E4
Q349	E3	E4
Q350	F3	F4
Q355	F2	F3
Q356	F2	F4
Q357	G3	F4
Q358	G4	G4
Q362	G4	G3
Q363	G5	G4
Q373	E5	H4
Q381	F2	J4
Q382	C1	J4
Q400	B1	A4
Q408	C5	B5
Q409	C4	B5
Q431	D3	D4
Q445	F4	E4
Q446	F3	E4
Q450	F3	F4
Q481	F1	J4
Q491	G1	K4
Q608	C5	B7
R119	B1	C1
R120	B1	C2
R204	A3	A3
R206	A1	A3
R207	A1	A3
R208	A1	A3
R215	A2	B3
R217	A3	B2
R305	A2	A3
R306	A1	A3
R307	A1	B3
R309	A2	A4
R310	A3	B3
R312	A2	B4
R316	D1	C3
R317	D1	C3
R322	C3	C3
R323	C3	C3
R324	D2	C3
R326	E1	C4
R327	D1	C4
R328	C2	C4
R329	C2	C4
R330	C2	C4
R332	D2	D3
R333	D2	D3
R334	D2	D3
R335	E2	D3
R336	D2	D3
R338	E2	E3
R340	F3	E3
R341	F2	E3
R342	E3	E3
R343	F3	E3
R344	E3	E3
R345	E3	F3
R346	F1	E3
R352	G3	F3
R354	G4	F3
R355	F3	F3
R356	F4	F4
R357	G3	F4
R360	F4	G3
R361	G5	G3
R362	G4	G3
R371	G5	H3
R372	G5	H3
R373	G5	H3
R374	F2	H3
R375	F2	J4
R379	**G2**	**J2**
R380	**G2**	**J2**
R381	F2	K3
R382	F2	J3
R383	F2	J3
R384	F1	J4
R385	F1	J4
R386	G1	J4
R387	G2	J4
R388	G2	J4
R389	**G2**	**J2**
R391	G2	K3
R392	G2	K4
R394	G2	K4
R395*	G2	K3
R400	F1	H4
R401	B1	A4
R403	B3	A4
R404	B3	B4
R405	C4	A5
R406	C4	A5
R407	C5	A5
R416	B3	B5
R418	C4	B5
R419	F4	C5
R420	G1	C5
R421	E1	C5
R427	D1	C4
R428	D1	C4
R429	D1	D4
R430	D3	D4
R431	D3	D4
R432	D3	D5
R433	D3	D5
R434	D3	D5
R435	D3	D5
R436	E4	D5
R437	E4	D5
R438	D3	D4
R441	F3	E4
R442	E3	E4
R443	E3	E4
R444	F3	E4
R445	F3	E4
R449	D1	E5
R450	E1	F5
R451	F5	F4
R452	F2	F4
R453	F4	F4
R454	F4	F5
R463	F4	G5
R465	F4	G5
R471	E5	H4
R472	E5	H4
R473	E5	H4
R474	E5	H4
R475	E5	H4
R477	F1	H4
R481	G1	J5
R482	G1	J5
R493	G1	K4
R506	B4	A6
R509	B4	A6
R515	C5	B6
R518	A3	B6
R603	A4	A7
R606	A4	A7
R607	A5	B7
R612	C5	B7
R613	C5	B7
R615	B4	B7
TP120	C1	B2
TP330	C3	C4
TP352	E3	E4
TP358	F1	F4
TP379	F2	J4
TP392	G2	K3
TP419	B1	B4
TP431	C3	D5
TP456	F5	F4
TP490	G2	K4
TP604	A3	A7
TP609	B4	B7
U101	B1	B1
U120	B1	B1
U121	B1	B1
U310	A2	A4
U440	E1	E5
U448	E1	E5
U455	F5	G5
U466	F5	G5
U477	G1	J5
U507A	B4	B6
U507B	C4	B6
U510	A5	B6
U510	B5	B6

ASSEMBLY A12

Partial A12 also shown on diagrams 3 and 4.

CIRCUIT NUMBER	SCHEM LOCATION	BOARD LOCATION
C317	H1	B3
C425	H1	C3
E225	H5	C2
L115	H1	B2
L419	H1	C3
P525	H1	C4
P525	H5	C4
R112	H1	C1
R219	H1	C2
R225	H5	C2
R325	H5	C3
R417	H5	C3
TP325	H4	C3
TP417	H5	B4
TP419	H1	C3

CHASSIS MOUNTED PARTS

E102	H5	CHASSIS
E112	H4	CHASSIS

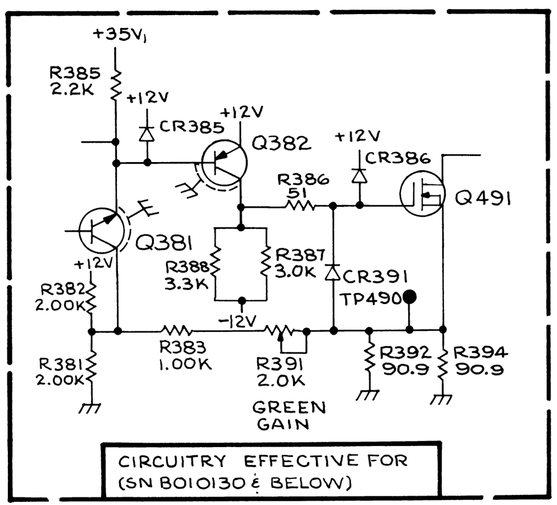
+35V1
R385
2.2K
+12V
CR385
+12V
Q382
+12V
CR386
R386
51
Q491
Q381
+12V
R382
2.00K
R388
3.3K
R387
3.0K
CR391
TP490
-12V
R383
1.00K
R391
2.0K
GREEN
GAIN
R392
90.9
R394
90.9
R381
2.00K
CIRCUITRY EFFECTIVE FOR
(SN B010130 & BELOW)

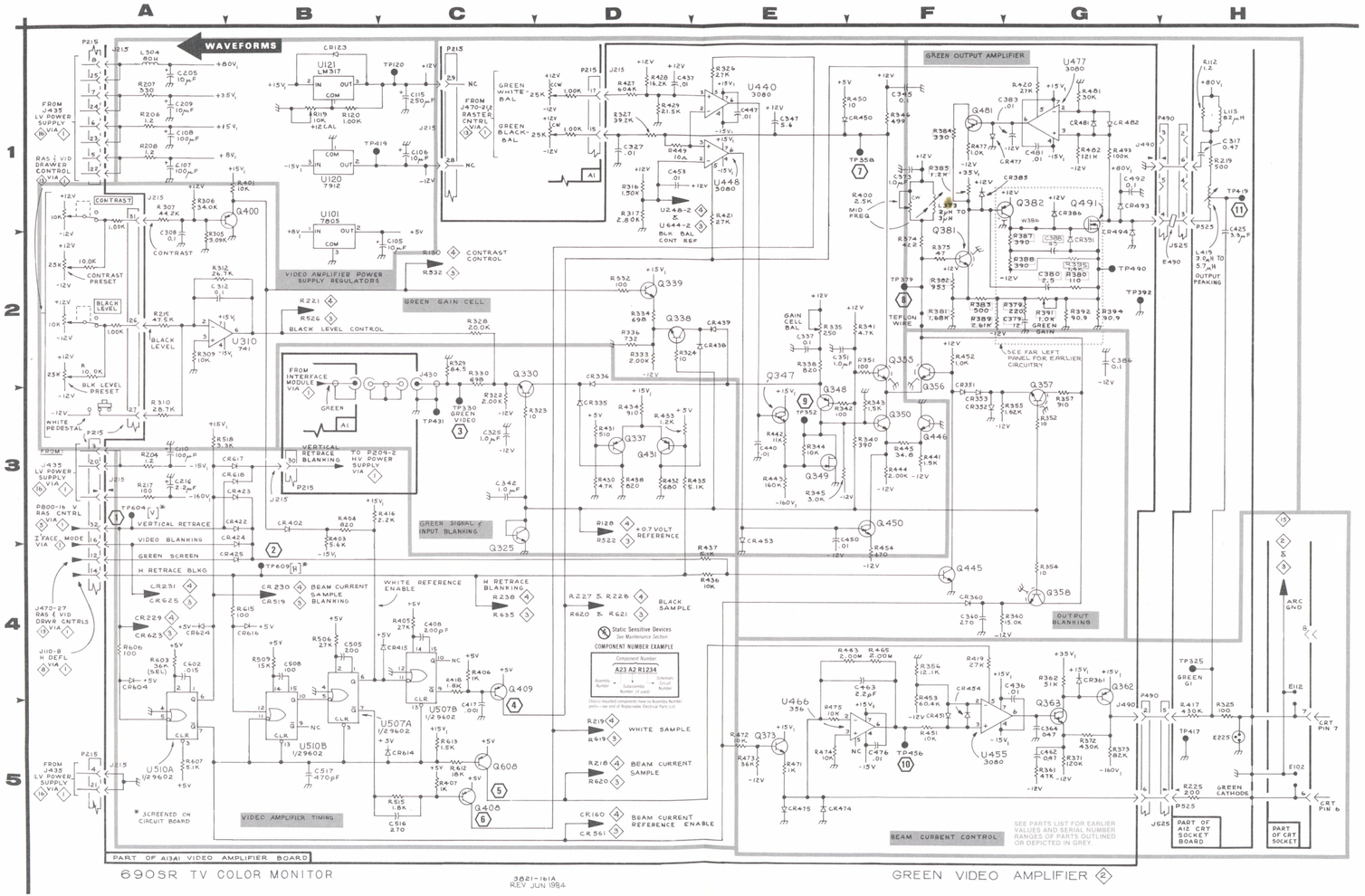
WAVEFORMS
GREEN OUTPUT AMPLIFIER
VIDEO AMPLIFIER POWER SUPPLY REGULATORS
GREEN GAIN CELL
GREEN SIGNAL / INPUT BLANKING
VERTICAL RETRACE BLANKING
VIDEO AMPLIFIER TIMING
BEAM CURRENT CONTROL
OUTPUT BLANKING
WHITE REFERENCE
BLACK SAMPLE
WHITE SAMPLE
BEAM CURRENT SAMPLE
BEAM CURRENT REFERENCE ENABLE
+0.7 VOLT REFERENCE
CONTRAST CONTROL
BLACK LEVEL CONTROL
COMPONENT NUMBER EXAMPLE
PART OF A1341 VIDEO AMPLIFIER BOARD
690SR TV COLOR MONITOR
3821-161A
REV JUN 1984
GREEN VIDEO AMPLIFIER

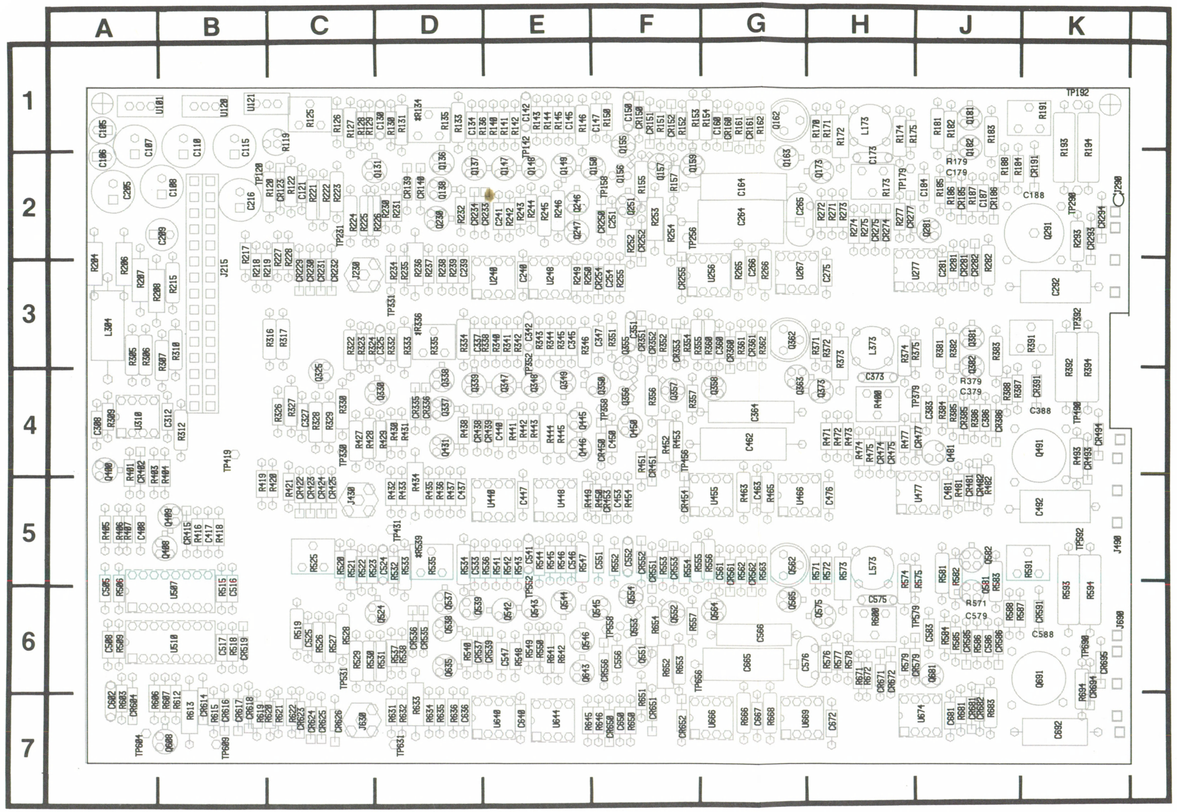

Fig. 12-9B. A13A1 Video Amplifier board (SNBQ10130 & Below).

Static Sensitive Devices
See Maintenance Section

COMPONENT NUMBER EXAMPLE

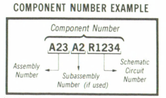

Chassis-mounted components have no Assembly Number prefix—see end of Replaceable Electrical Parts List.

3821-127

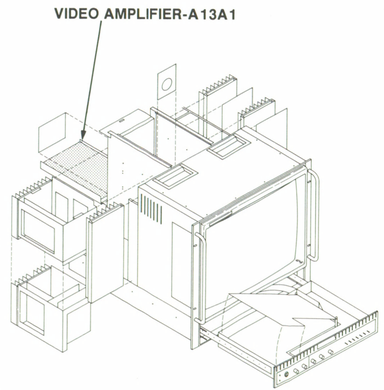

REV JUN 1984

RED VIDEO AMPLIFIER DIAGRAM 3

ASSEMBLY A13A1 *Partial A13A1 also shown on diagrams 2 and 4.*

CIRCUIT NUMBER	SCHEM LOCATION	BOARD LOCATION
C524	D3	D5
C525	D1	C6
C533	E2	D5
C541	C3	E5
C546	F1	E5
C547	E3	E6
C551	E1	F5
C552	E2	F5
C556	E3	F6
C561	F4	G5
C566	G5	G6
C575	F1	H6
C576	F4	G6
C579	**G2**	**J6**
C580*	**G2**	**J6**
C583	F1	J6
C586	G2	J6
C588	**G2**	**J6**
C636	D1	D7
C640	E1	E7
C650	D1	F7
C665	G5	G6
C667	G4	G7
C672	F5	H7
C681	F1	J7
C692	G3	K7
CR519	D4	B6
CR535	D2	D6
CR536	D3	D6
CR537	E2	D6
CR539	E2	E6
CR551	F2	F5
CR552	F2	F5
CR553	F2	F5
CR556	E1	F6
CR561	F4	G5
CR562	G4	G5
CR579	F1	J6
CR585	F1	J6
CR586	G1	J6
CR591	G2	K6
CR623	D4	C7
CR625	D4	C7
CR626	D4	C7
CR650	E3	F7
CR651	F5	F7
CR652	F5	F7
CR671	E5	H6
CR672	E5	H6
CR681	G1	J7
CR682	G1	J7
CR694	G1	K6
CR695	G1	K6
J215	C4	B3
J630	C2	C7
J690	G1	K6
J690	G5	K6
L573	F1	H5
Q524	C2	D6
Q537	D2	D6
Q538	D3	D6
Q539	D2	D6
Q542	E3	E6
Q543	E3	E6
Q544	E3	E6
Q545	F2	F6
Q546	F4	E6
Q551	F3	F6
Q552	G3	F6
Q553	F2	F6
Q554	F2	F6
Q562	G4	G5
Q564	G4	G6
Q565	G5	G6
Q575	E5	H6
Q581	G1	J6
Q582	F2	J5
Q635	D3	D6
Q643	F3	E6
Q681	F1	J6
Q691	G1	K6
R519	D1	C6
R520	C2	C5
R521	C3	C5
R522	C3	C5
R523	D2	C5
R525	C2	C5
R526	C2	C6
R527	C2	C6
R528	C2	C6
R529	D1	C6
R530	D1	C6
R531	D1	D6
R532	D2	D5
R533	D2	D5
R534	D2	D5
R535	E2	D5
R536	E2	E5
R537	D3	D6
R538	D3	D6
R539	D2	D5
R540	D3	D6
R541	F3	E5
R542	F2	E5
R543	E3	E5
R544	F2	E5
R545	E3	E5
R546	E3	E5
R547	F1	E5
R548	F3	E6
R549	E3	E6
R550	E3	E6
R552	F2	F5
R553	G3	F5
R554	G4	F5
R555	G3	F5
R556	F4	G5
R557	G2	F6
R562	G5	G5
R563	G4	G5
R570	**G2**	**J6**
R571	G5	H5
R572	G5	H5
R573	G5	H5
R574	F2	H5
R575	F2	J5
R576	E5	J5
R577	E5	H6
R578	E5	H6
R579	F1	H6
R580*	**G2**	**J6**
R581	F2	J5
R582	F2	J5
R583	F2	J6
R584	F1	J6
R585	F1	J6
R586	G1	J6
R587	G2	K6
R588	G2	J6
R589*	**G2**	**J6**
R591	G2	K5
R593	G2	K6
R594	G2	K6
R595*	G2	K6
R600	F1	H6
R619	E1	B7
R620	G1	C7
R621	E1	C7
R622	F4	C7
R631	D3	D7
R632	D3	D7
R633	D3	D7
R634	D3	D7
R635	E4	D7
R636	E4	D7
R641	F3	E6
R642	F3	E6
R645	D1	E7
R646	E1	F7
R650	F4	F7
R651	F5	F7
R652	F2	F6
R653	F4	F6
R654	F4	F6
R666	F4	G7
R668	F4	G7
R671	E5	H6
R672	E5	H6
R681	G1	J7
R683	G1	J7
R694	G1	K6
TP531	C3	C6
TP552	E3	E6
TP558	F1	F6
TP579	F2	J6
TP592	G2	K5
TP631	C3	D7
TP656	F5	F6
TP690	G2	K6
U640	E1	E7
U644	E1	E7
U666	F5	G7
U669	F5	G7
U674	G1	J7

ASSEMBLY A12 *Partial A12 also shown on diagrams 2 and 4.*

C329	H1	D3	P535	H2	D4	R425	H5	D3
C437	H1	D3	P535	H5	D4			
						TP337	H4	E3
E237	H5	E2	R212	H1	D1	TP425	H5	C3
			R234	H1	D2	TP437	H1	E3
L129	H1	D2	R237	H5	E2			
L445	H1	D3	R337	H5	E3			

CHASSIS MOUNTED PARTS

E103	H4	CHASSIS	E107	H5	CHASSIS			

*See Parts List for serial number ranges.

3821-128

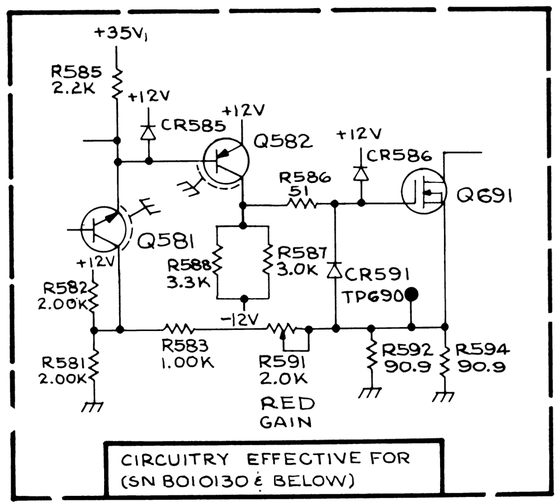
+35V1
R585
2.2K
+12V
CR585
Q582
+12V
+12V
CR586
R586
51
Q691
Q581
+12V
R588
3.3K
R587
3.0K
CR591
TP690
R582
2.00K
-12V
R581
2.00K
R583
1.00K
R591
2.0K
RED
GAIN
R592
90.9
R594
90.9
CIRCUITRY EFFECTIVE FOR
(SN B010130 & BELOW)

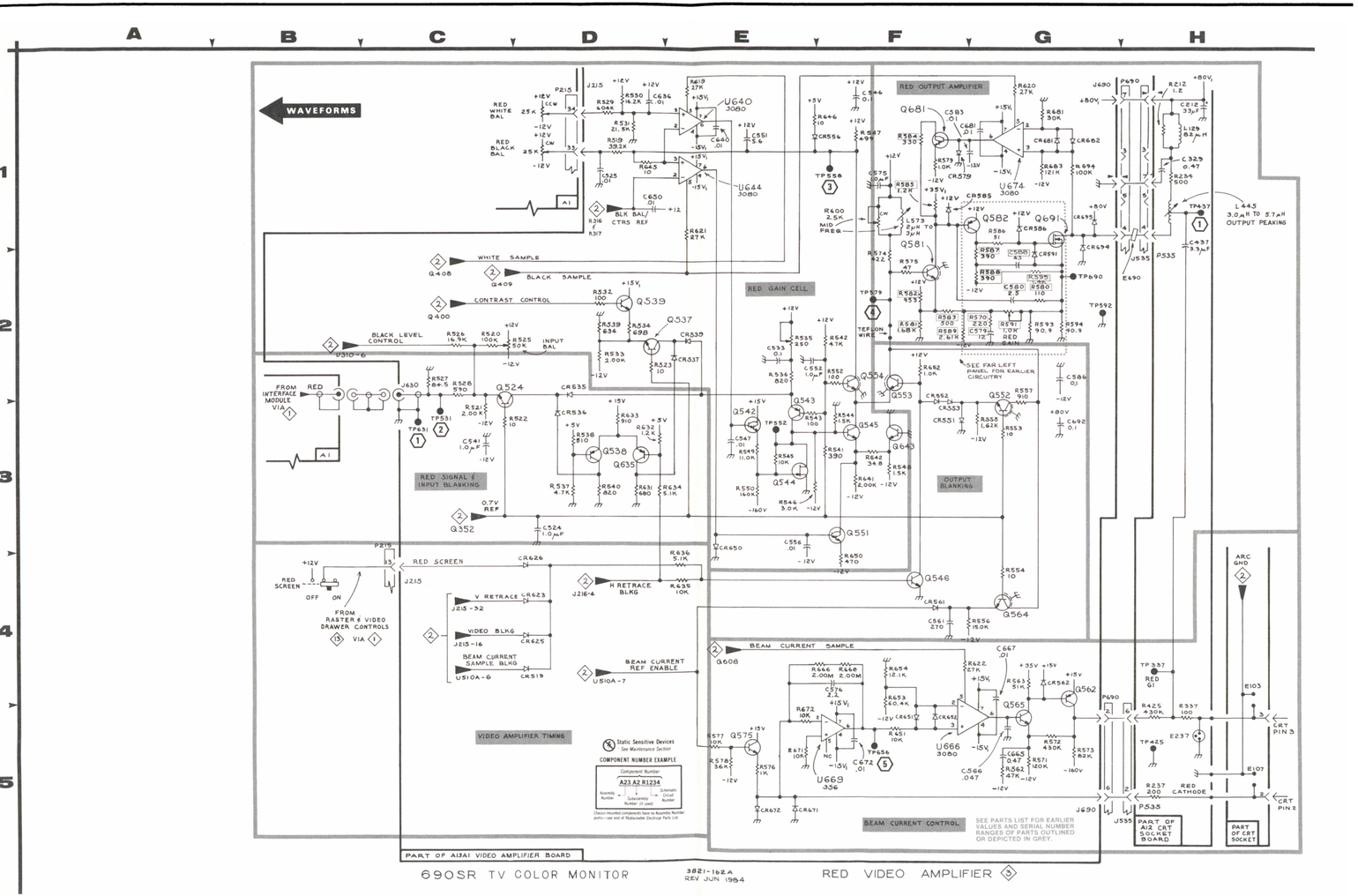
A
B
C
D
E
F
G
H
1
2
3
4
5
WAVEFORMS
RED WHITE BAL
RED BLACK BAL
U640 3080
U644 3080
BLK BAL CTRS REF
WHITE SAMPLE
BLACK SAMPLE
CONTRAST CONTROL
BLACK LEVEL CONTROL
INPUT BAL
FROM INTERFACE MODULE VIA
RED SIGNAL & INPUT BLANKING
0.7V REF
RED SCREEN
OFF ON
FROM RASTER & VIDEO DRAWER CONTROLS VIA
V RETRACE
VIDEO BLKG
BEAM CURRENT SAMPLE BLKG
H RETRACE BLKG
BEAM CURRENT REF ENABLE
VIDEO AMPLIFIER TIMING
Static Sensitive Devices
See Maintenance Section
COMPONENT NUMBER EXAMPLE
A23 A2 R1234
RED GAIN CELL
RED OUTPUT AMPLIFIER
OUTPUT BLANKING
BEAM CURRENT SAMPLE
BEAM CURRENT CONTROL
SEE FAR LEFT PANEL FOR EARLIER CIRCUITRY
L445 3.0µH TO 57µH OUTPUT PEAKING
ARC GND
CRT PIN 3
CRT PIN 2
RED CATHODE
PART OF A12 CRT SOCKET BOARD
PART OF CRT SOCKET
SEE PARTS LIST FOR EARLIER VALUES AND SERIAL NUMBER RANGES OF PARTS OUTLINED OR DEPICTED IN GREY.
PART OF A13A1 VIDEO AMPLIFIER BOARD
690SR TV COLOR MONITOR
3821-162A
REV JUN 1984
RED VIDEO AMPLIFIER 5

BLUE VIDEO AMPLIFIER DIAGRAM 4

ASSEMBLY A13A1

Partial A13A1 also shown on diagrams 2 and 3.

CIRCUIT NUMBER	SCHEM LOCATION	BOARD LOCATION
C121	D1	C2
C130	C3	D1
C134	E2	D1
C142	D3	E1
C145	F1	E1
C147	E1	F1
C150	E2	F1
C160	F4	G1
C164	G5	G2
C173	F1	H2
C179	**G2**	**J2**
C180*	**G2**	**J2**
C184	F1	J2
C187	G2	J2
C188	**G2**	**J2**
C239	D1	D3
C240	E1	E3
C241	E3	E2
C254	D1	F3
C264	G5	G2
C265	F4	G2
C266	G4	G3
C275	F5	H3
C281	G1	J3
C292	G3	K3
CR139	D3	D2
CR140	D2	D2
CR150	F2	F1
CR151	F3	F1
CR152	F2	F1
CR160	F4	G1
CR161	G4	G1
CR185	F1	J2
CR186	G1	J2
CR191	G2	K2
CR229	D4	C3
CR230	D4	C3
CR231	D4	C3
CR232	D4	C3
CR233	E2	E2
CR234	E2	D2
CR250	E1	F2
CR252	F5	F2
CR254	E3	F3
CR255	F5	F3
CR274	E5	H2
CR275	E5	H2
CR277	F1	H2
CR281	G1	J3
CR282	G1	J3
CR293	G1	K2
CR294	G2	K2
J215	C4	B3
J215	D1	B3
J230	C2	C3
J290	G1	K2
J290	G5	K2
L173	F1	H1
Q131	C3	D2
Q136	D2	D2
Q137	D2	D2
Q138	D3	D2
Q147	E3	E2
Q148	E3	E2
Q149	E3	E2
Q150	F3	F2
Q155	F2	F1
Q156	F2	F2
Q157	G3	F2
Q159	G4	F2
Q162	G4	G1
Q163	G5	G2
Q173	E5	H2
Q181	F2	J1
Q182	G1	J1
Q230	D3	D2
Q246	F4	E2
Q247	F3	E2
Q251	F3	F2
Q281	F1	J2
Q291	G1	K2
R122	D1	C2
R125	C2	C1
R126	C2	C1
R127	C3	C1
R128	C3	C1
R129	D2	C1
R130	D2	D1
R131	D2	D1
R133	D2	D1
R134	D2	D1
R135	E2	D1
R136	E2	D1
R140	F3	E1
R141	F2	E1
R142	E3	E1
R143	F3	E1
R144	E3	E1
R145	E3	E1
R146	F1	E1
R150	F2	F1
R151	G3	F1
R152	G4	F1
R153	G3	F1
R154	F4	G1
R155	F4	F2
R157	G2	F2
R161	G5	G1
R162	G4	G1
R170	G5	H1
R171	G5	H1
R172	G5	H1
R173	F1	H2
R174	F2	H1
R175	F2	H1
R179	**G2**	**J2**
R180*	**G2**	**J2**
R181	F2	J1
R182	F2	J1
R183	F2	J1
R184	G2	J2
R185	F1	J2
R186	F1	J2
R187	G1	J2
R188	F2	J2
R189*	**G2**	**J2**
R191	G2	K1
R193	G2	K1
R194	G2	K1
R195*	G2	K2
R218	F4	B3
R219	E1	C2
R221	C2	C2
R222	C2	C2
R223	C3	C2
R224	D1	C2
R225	D1	C2
R226	D1	D2
R227	G1	C2
R228	E1	C2
R230	D3	D2
R231	D3	D2
R232	D3	D2
R234	D3	D3
R235	D3	D3
R236	D3	D3
R237	D3	D3
R238	E4	D3
R239	E4	D3
R242	F3	E2
R243	E3	E2
R244	E3	E2
R245	F3	E2
R246	F3	E2
R249	D1	E3
R250	E1	E3
R252	F5	F2
R253	F2	F2
R254	F4	F2
R255	F4	F3
R265	F4	G3
R266	F4	G3
R271	E5	H2
R272	E5	H2
R273	E5	H2
R274	E5	H2
R275	E5	H2
R277	F1	H2
R281	G1	J3
R282	G1	J3
R293	G1	K2
TP142	E3	E1
TP158	F1	F2
TP179	F2	H2
TP192	G2	K1
TP231	C3	C2
TP256	F5	F2
TP290	G2	K2
TP331	C3	D3
U240	E1	E3
U248	E1	E3
U256	F5	G3
U267	F5	G3
U277	G1	J3

ASSEMBLY A12

Partial A12 also shown on diagrams 2 and 3.

CIRCUIT NUMBER	SCHEM LOCATION	BOARD LOCATION
C305	H1	A3
C409	H1	B3
E209	H5	B2
L105	H1	A2
L409	H1	B3
P500	H1	B4
P500	H5	B4
R102	H1	B1
R206	H1	B2
R209	H5	B2
R309	H5	B3
R405	H5	A3
TP309	H4	B3
TP405	H5	A3
TP410	H1	B3

CHASSIS MOUNTED PARTS

E106	H4	CHASSIS
E111	H5	CHASSIS

***See Parts List for serial number ranges.**

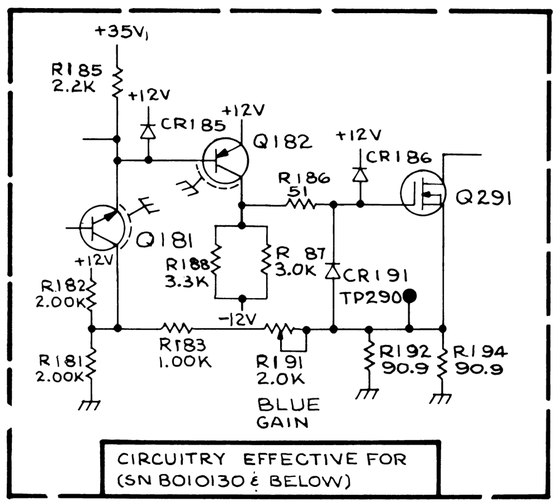
+35V
R185 2.2K
+12V
CR185
Q182
+12V
CR186
+12V
R186 51
Q291
Q181
R188 3.3K
R 87 3.0K
CR191
TP290
+12V
R182 2.00K
-12V
R183 1.00K
R181 2.00K
R191 2.0K
BLUE GAIN
R192 90.9
R194 90.9
CIRCUITRY EFFECTIVE FOR (SN B010130 & BELOW)

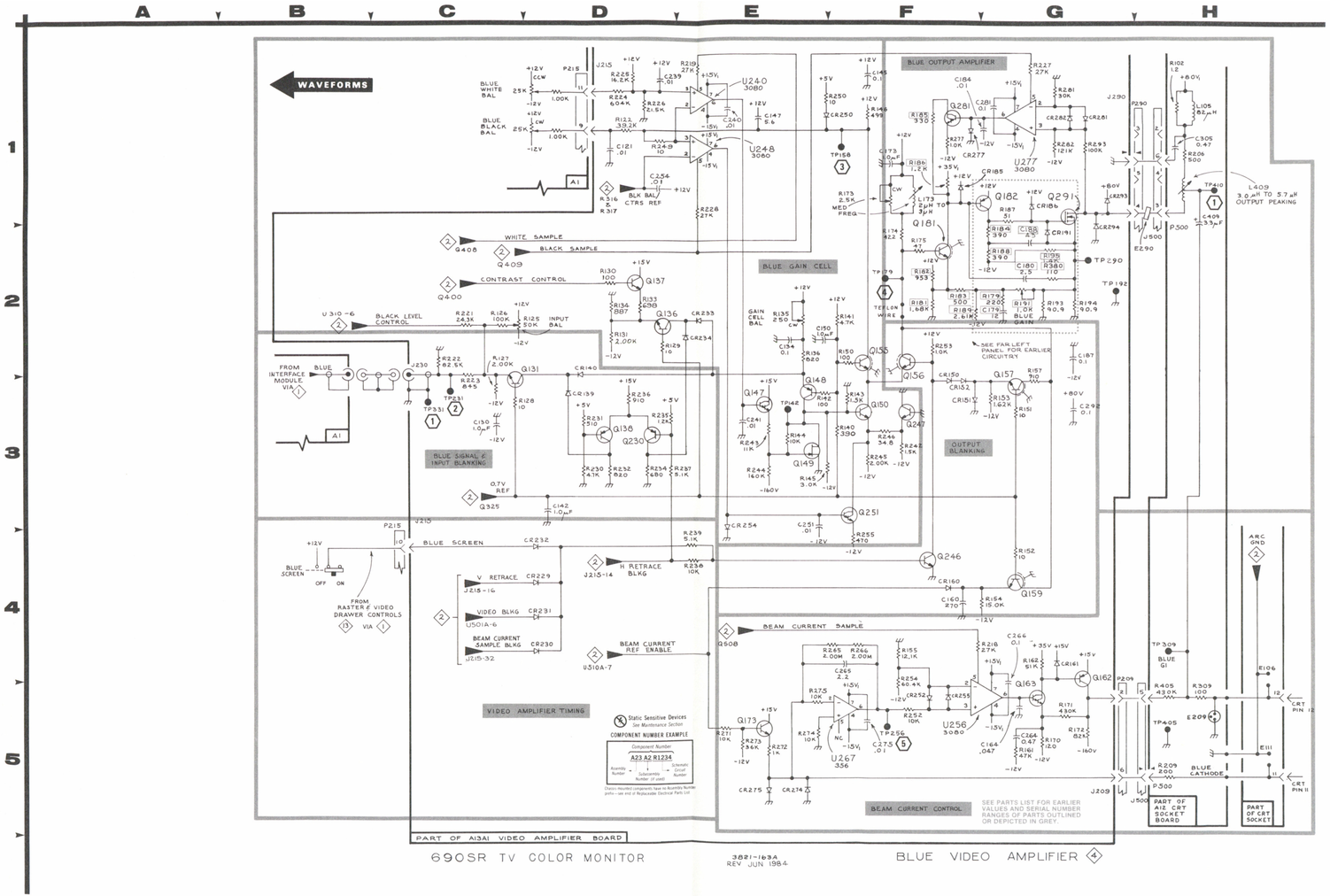
A
B
C
D
E
F
G
H
1
2
3
4
5
WAVEFORMS
BLUE WHITE BAL
BLUE BLACK BAL
U240 3080
U248 3060
BLK BAL CTRS REF
WHITE SAMPLE
BLACK SAMPLE
CONTRAST CONTROL
BLACK LEVEL CONTROL
INPUT BAL
FROM BLUE INTERFACE MODULE VIA
BLUE SIGNAL & INPUT BLANKING
0.7V REF
BLUE SCREEN
FROM RASTER & VIDEO DRAWER CONTROLS VIA
V RETRACE
VIDEO BLKG
BEAM CURRENT SAMPLE BLKG
H RETRACE BLKG
BEAM CURRENT REF ENABLE
VIDEO AMPLIFIER TIMING
BLUE GAIN CELL
BLUE OUTPUT AMPLIFIER
SEE FAR LEFT PANEL FOR EARLIER CIRCUITRY
OUTPUT BLANKING
BEAM CURRENT SAMPLE
BEAM CURRENT CONTROL
Static Sensitive Devices
See Maintenance Section
COMPONENT NUMBER EXAMPLE
Component Number
A23 A2 R1234
Assembly Number
Subassembly Number (if used)
Schematic Circuit Number
Chassis-Mounted components have no Assembly Number prefix—see end of Replaceable Electrical Parts List
PART OF A13A1 VIDEO AMPLIFIER BOARD
PART OF A1E CRT SOCKET BOARD
PART OF CRT SOCKET
690SR TV COLOR MONITOR
3821-163A
REV JUN 1984
BLUE VIDEO AMPLIFIER 4

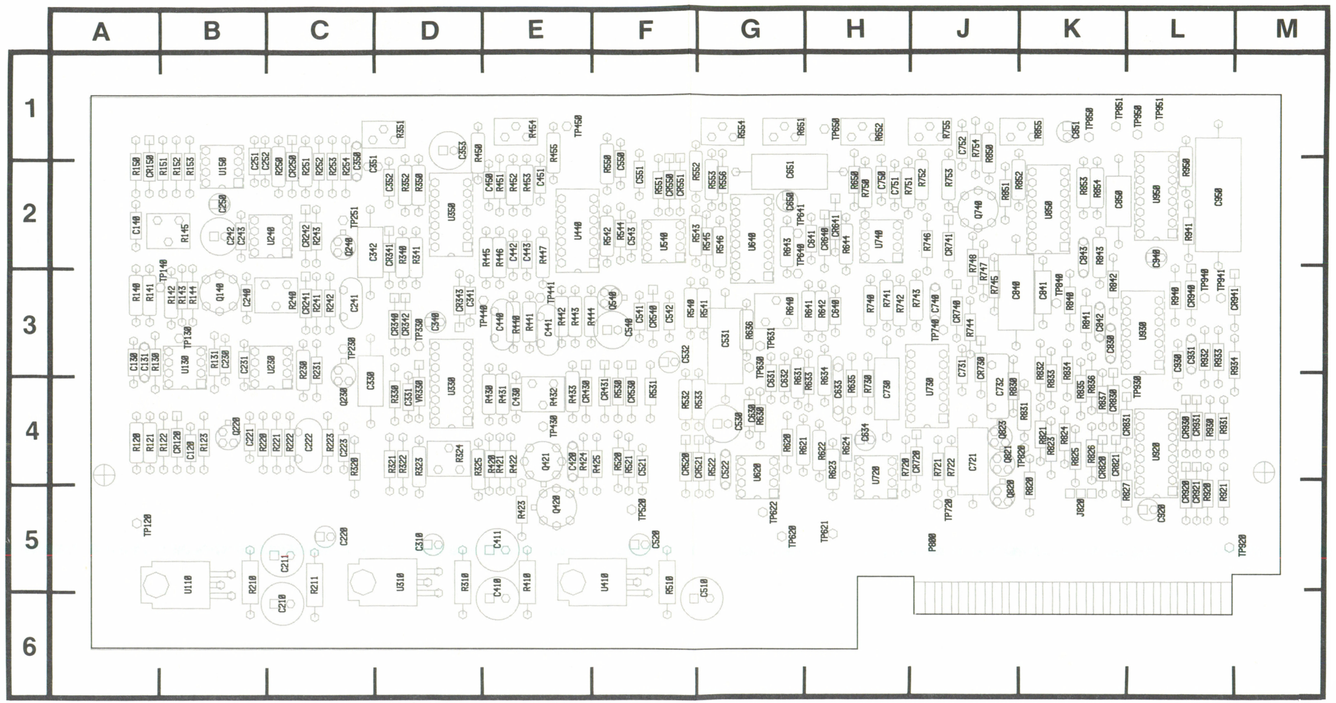

Fig. 12-10. A9A1 Raster Control board.

VERTICAL RASTER CONTROL DIAGRAM 5

ASSEMBLY A9A1 *Partial A9A1 also shown on diagram 6.*

CIRCUIT NUMBER	SCHEM LOCATION	BOARD LOCATION
C352	F5	D2
C353	F3	D1
C440	G4	E3
C441	G4	E3
C442	F4	E2
C443	F4	E2
C450	F3	E2
C451	G5	E2
C521	C1	F4
C522	C1	G4
C530	C1	G4
C531	E1	G3
C540	G3	F3
C541	G3	F3
C542	F1	F3
C543	F1	F2
C550	G5	F2
C551	F1	F2
C630	C2	G4
C631	C1	G4
C632	C2	G4
C633	A2	H4
C634	A1	H4
C640	D2	H3
C641	E1	H2
C650	E2	G2
C651	E2	G2
C721	B1	J4
C730	B2	H4
C731	A2	J3
C732	B5	J4
C740	F2	J3
C750	D2	H2
C751	D2	H2
C752	C3	J1
C830	B4	K3
C840	F2	J3
C842	B4	K3
C843	C4	K2
C850	C4	K2
C851	D3	K1
C920	A4	L5
C930	D3	L3
C931	D4	L3
C940	C3	L2
C950	D4	L2
CR342	E5	D3
CR343	E5	D3
CR520	C2	F4
CR521	C1	G4
CR530	H4	F4
CR540	H4	F3
CR550	F1	F2
CR551	F1	F2
CR640	F2	H2
CR641	F2	H2
CR720	A1	J4
CR730	A1	J3
CR740	F2	J3
CR741	F3	J2
CR820	A4	K4
CR821	A4	K4
CR830	A4	K4
CR831	A4	L4
CR940	E3	L3
CR941	E3	L3
P800	A4	J5
P800	C1	J5
P800	H4	J5
Q540	H4	F3
Q740A	F2	J2
Q740B	F2	J2
Q820	B1	J5
Q820	B5	J5
Q821	D4	J4
Q823	B5	J4
R250	E4	C2
R324	F1	D4
R340	E5	D2
R341	F4	D2
R350	E4	D2
R351	E4	D1
R352	E5	D2
R440	F4	E3
R441	G4	E3
R442	H4	E3
R443	G4	E3
R444	H4	E3
R445	F4	E2
R446	F4	E2
R447	G4	E2
R450	G4	D1
R451	F3	E2
R452	F4	E2
R453	F4	E2
R454	G4	E1
R455	G5	E1
R522	C2	G4
R530	G3	F4
R531	H4	F4
R532	G5	F4
R533	G5	G4
R540	F1	F3
R541	E1	G3
R542	G4	F2
R543	F1	F2
R544	H4	F2
R545	D2	G2
R546	E1	G2
R550	G4	F2
R551	G1	F2
R552	F1	F2
R553	E1	G2
R554	F1	G1
R556	E2	G2
R620	B1	G4
R621	C1	G4
R622	B1	H4
R623	A1	H4
R624	A1	H4
R630	B2	G4
R631	C1	G4
R633	C1	H4
R634	A1	H4
R635	A2	H4
R636	E2	G3
R640	E1	G3
R641	D2	H3
R642	D2	H3
R643	E2	G2
R644	D2	H2
R650	D1	H2
R651	E2	G1
R652	D2	H1
R720	B2	H4
R721	B1	J4
R722	A1	J4
R730	A2	H4
R740	G2	H3
R741	D2	H3
R742	D2	H3
R743	F2	J3
R744	A1	J3
R745	A1	J3
R746	E3	J2
R747	F2	J3
R748	F2	J2
R750	D2	H2
R751	D2	H2
R752	D2	J2
R753	C3	J2
R754	D3	J1
R755	G3	J1
R820	B1	K5
R821	B1	K4
R823	B1	K4
R824	D4	K4
R825	A4	K4
R826	A5	K4
R830	B5	J4
R831	D4	K4
R832	D2	K3
R833	D4	K4
R834	B4	K3
R835	B5	K4
R836	A4	K4
R837	A4	K4
R840	C5	K3
R841	D3	K3
R842	B4	K3
R843	B4	K2
R850	C2	J1
R851	F3	J2
R853	C4	K2
R854	C4	K2
R855	C2	K1
R932	D4	L3
R933	D4	L3
R934	H3	L3
R940	D3	L3
R941	C5	L2
R950	C4	L2
TP440	G4	E3
TP441	G4	E3
TP621	H4	H5
TP622	C2	G5
TP630	E2	G3
TP631	E1	G3
TP640	G2	G2
TP641	D1	G2
TP650	D3	H1
TP720	B2	J5
TP740	G3	J3
TP820	C4	K4
TP840	D3	K3
TP850	C4	K1
TP851	G1	K1
TP930	B4	L4
TP940	D4	L3
TP941	H3	L3
U350	F4	D2
U440	G4	E2
U540	F1	F2
U620	C2	G4
U640	E1	G2
U720A	B2	H4
U720B	A1	H4
U730	B2	J4
U740A	F2	H2
U740	D2	H2
U850A	C4	K2
U920B	B4	L4
U930A	D4	L3
U930B	D3	L3
U930C	C3	L3
U930D	B4	L3
U950A	C4	L2
U950B	D4	L2

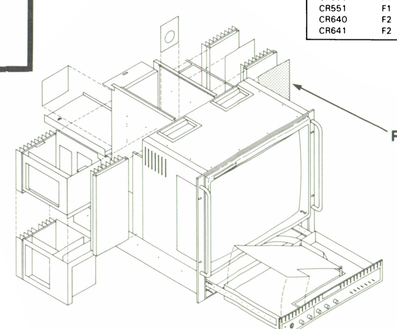

RASTER CONTROL—A9A1

Static Sensitive Devices
See Maintenance Section

COMPONENT NUMBER EXAMPLE

Chassis-mounted components have no Assembly Number prefix—see end of Replaceable Electrical Parts List.

NOTE
GROUND IS REFERENCED TO THE HORIZONTAL CENTER LINE OF THE GRATICULE UNLESS LABELED OTHERWISE.

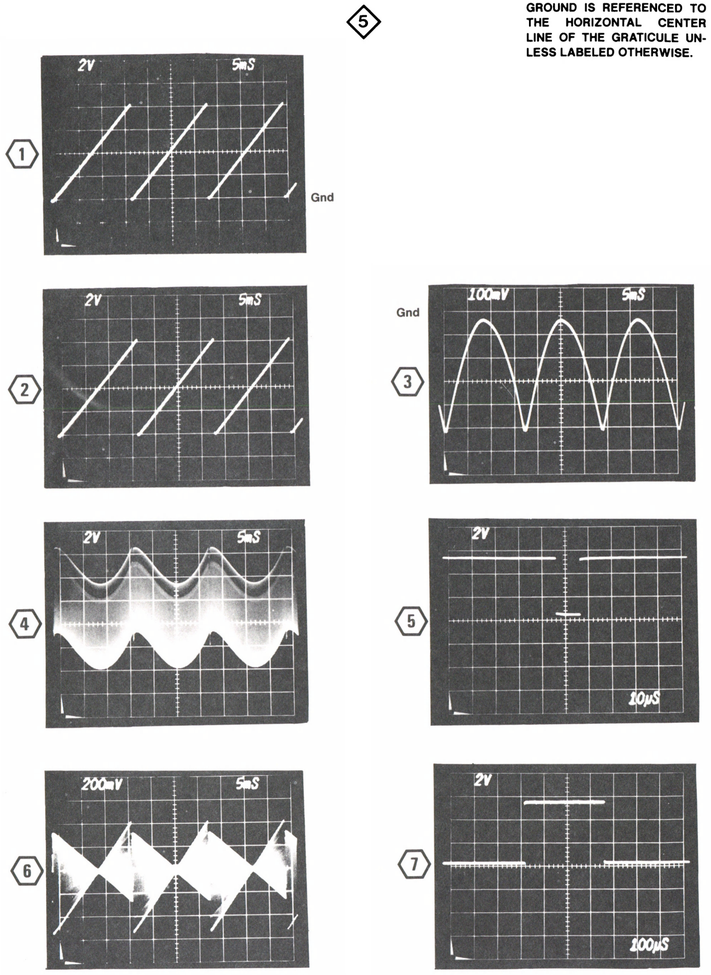

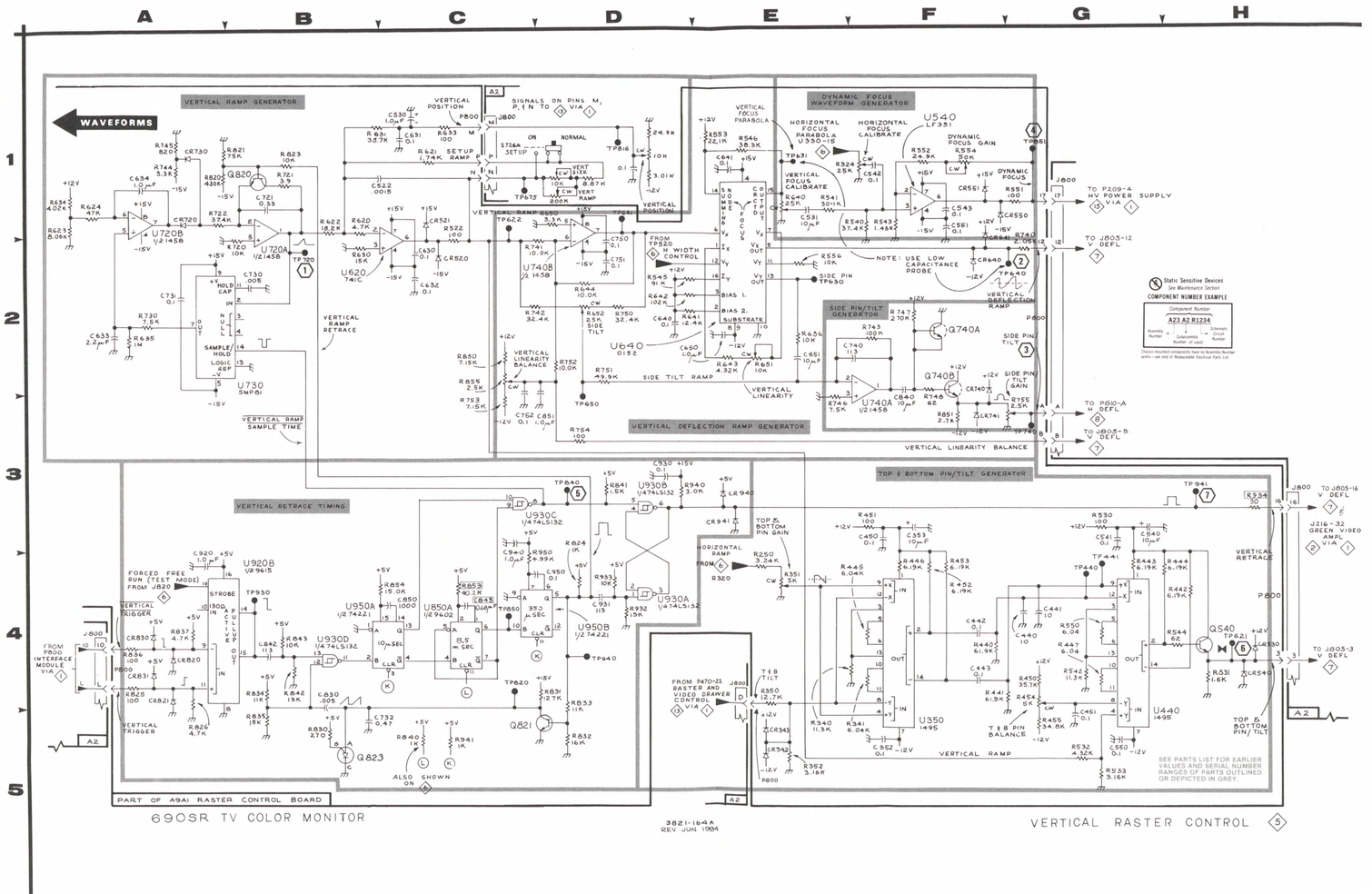

3821-131

HORIZONTAL RASTER CONTROL DIAGRAM 6

ASSEMBLY A9A1 *Partial A9A1 also shown on diagram 5.*

CIRCUIT NUMBER	SCHEM LOCATION	BOARD LOCATION
C120	E2	B4
C130	E2	A3
C131	E2	A3
C140	A2	A2
C210	H4	C6
C211	G5	C5
C220	G4	C5
C221	C2	B4
C222	C3	C4
C223	C4	C4
C230	D2	B3
C231	C2	B3
C240	B3	B3
C241	B3	C3
C242	A2	B2
C243	B3	B2
C250	B1	B2
C251	B2	B2
C252	B2	B2
C310	G3	D5
C330	C2	C4
C331	E2	D4
C340	F3	D3
C341	F1	D3
C342	B2	C2
C350	B3	C2
C410	H3	E5
C411	G3	E5
C420	G2	E4
C430	E2	E4
C510	H4	G5
C520	G4	F5
C521	G2	F4
C532	G2	F3
C840	B4	J3
C841	B4	K3
CR120	C3	B4
CR150	B2	A2
CR241	C1	C3
CR242	B3	C2
CR250	C2	C2
CR340	H1	D3
CR341	H1	D2
CR430	H2	E4
CR431	H2	F4
CR920	A4	L5
CR921	A4	L5
CR930	A4	L4
CR931	A4	L4
P800	A2	J5
P800	H1	J5
Q140A	D2	B3
Q140B	D1	B3
Q220	D3	B4
Q230	C1	C4
Q240	B2	C2
Q420A	G2	E5
Q420B	G2	E5
Q421A	F2	E4
Q421B	G2	E4
R120	C3	A4
R121	C2	A4
R122	D2	B4
R123	D2	B4
R130	E2	A3
R131	D1	B3
R140	D2	A3
R141	D2	A3
R142	E2	B3
R143	D2	B3
R144	D2	B3
R145	D1	B2
R150	A2	A2
R151	B2	B2
R152	B2	B2
R153	B2	B2
R210	H5	B5
R211	G5	C5
R220	C1	B4
R221	C1	C4
R222	C3	C4
R223	C4	C4
R230	C2	C3
R231	C1	C3
R240	C2	C3
R241	B1	C3
R242	B3	C3
R243	B3	C2
R251	C2	C2
R252	B3	C2
R253	B2	C2
R254	B2	C2
R310	H3	D5
R320	H1	C4
R321	F2	D4
R322	E2	D4
R323	F1	D4
R325	E1	D4
R330	E2	D4
R410	G3	E5
R420	F2	E4
R421	F2	E4
R422	F2	E4
R423	G2	E5
R424	G2	E4
R425	G2	F4
R430	E2	E4
R431	E2	E4
R432	F3	E4
R433	F3	E4
R510	H4	F5
R520	G2	F4
R521	H2	F4
R827	A4	L5
R840	C4	K3
R852	B4	J2
R920	B4	L5
R921	A4	L5
R930	A4	L4
R931	A4	L4
TP120	G4	A5
TP130	E2	B3
TP140	D2	B3
TP230	D1	C3
TP251	B3	C2
TP330	F1	D3
TP430	F2	E4
TP450	G4	E1
TP520	H2	F5
TP620	G4	G5
TP920	G4	M5
TP950	C4	L1
TP951	B4	L1
U110	G5	B5
U130	E2	B3
U150	B2	B2
U230	C2	C3
U240	B3	C2
U310	G3	D5
U330	F2	D4
U410	G4	F5
U850	B4	K2
U920A	B4	L4
VR330	E2	D4

NOTE
GROUND IS REFERENCED TO THE HORIZONTAL CENTER LINE OF THE GRATICULE UNLESS LABELED OTHERWISE.

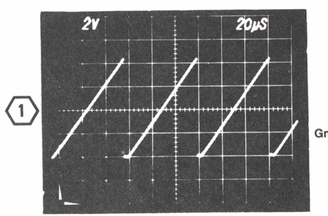

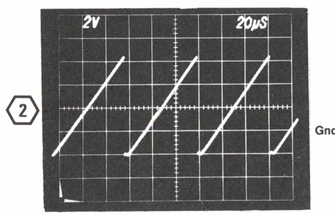

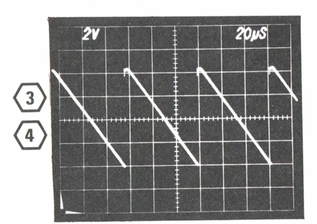

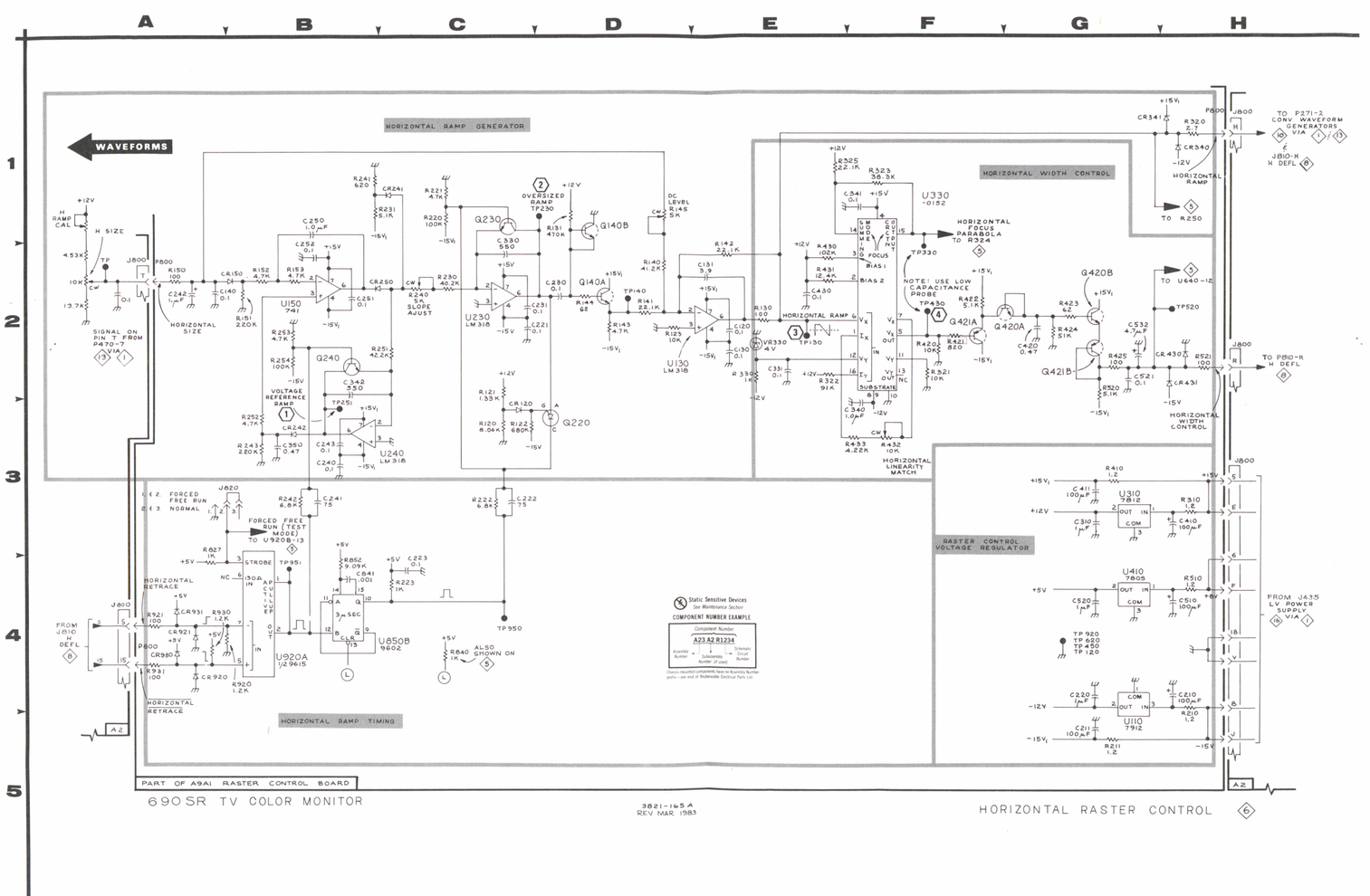

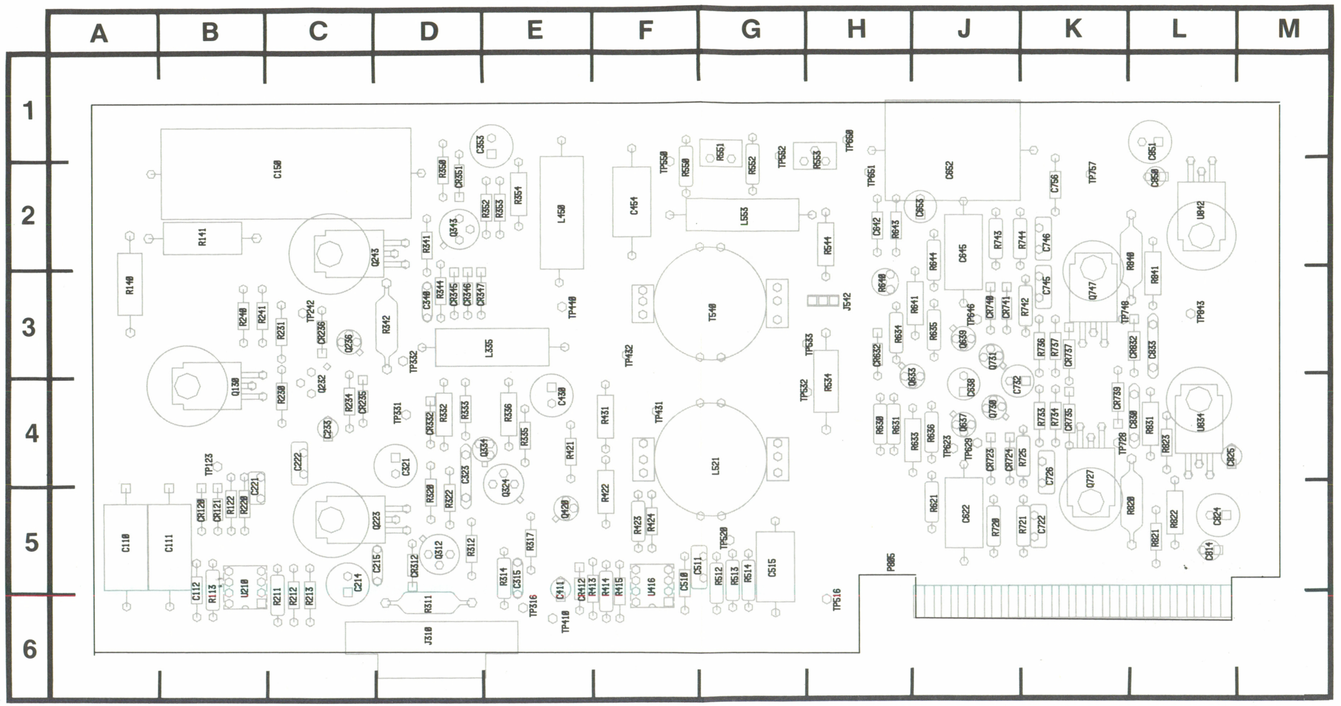

Fig. 12-11. A10A1 Vertical Deflection board.

VERTICAL DEFLECTION DIAGRAM 7

ASSEMBLY A10A1

CIRCUIT NUMBER	SCHEM LOCATION	BOARD LOCATION
C110	H4	A5
C111	G4	B5
C112	G4	B6
C150	C1	C2
C214	F4	C5
C215	D2	D5
C221	F4	B5
C222	G4	C4
C233	B1	C4
C315	B3	E5
C321	D3	D4
C323	C2	D4
C340	D1	D3
C353	D1	E1
C411	B3	E6
C430	C3	E4
C454	A3	F2
C510	B3	F5
C511	B2	G5
C515	A3	G6
C622	A4	J5
C638	C4	J4
C642	G2	H2
C645	E4	J2
C652	E3	J2
C653	G2	J2
C722	B4	K5
C726	C5	K5
C732	G2	J4
C745	D5	K3
C746	E4	K2
C756	G2	K2
C814	H4	L5
C824	H1	L5
C825	G2	L4
C830	C5	L4
C833	D5	L3
C850	G1	L2
C851	H1	L2
CR120	G4	B5
CR121	G4	B5
CR235	C1	C4
CR236	D2	C3
CR312	D2	D5
CR332	D3	D4
CR345	C2	D3
CR346	C2	D3
CR347	C2	D3
CR351	D1	D2
CR412	B3	E6
CR632	C4	H3
CR723	C4	J4
CR724	C5	J4
CR735	D4	K4
CR737	D4	K3
CR739	C4	K4
CR740	D4	J3
CR741	D5	J3
CR832	D4	L3
J310	E2	D6
J542	E2	H3
L335	D3	E3
L450	D1	E2
L521	E3	G4
L553	E2	G2
P805	A1	H5
P805	A3	H5
P805	A4	H5
P805	F4	H5
P805	H1	H5
P805	H4	H5
Q130	D1	B4
Q223	D3	D5
Q232	C1	C4
Q236	C1	C3
Q243	D2	D2
Q312	D2	D5
Q324	C3	E5
Q334	C3	E4
Q343	C1	D2
Q420	C3	E5
Q633	C4	J4
Q637	C4	J4
Q639	D4	J3
Q727	C4	K5
Q730	C4	J4
Q731	D4	J3
Q747	D4	K3
R113	G4	B6
R122	G4	B5
R140	C1	A3
R141	C1	B2
R211	G4	C6
R212	G3	C6
R213	G4	C6
R220	G4	B5
R230	D1	C4
R231	D1	C3
R234	C1	C4
R240	C1	B3
R241	C1	B3
R311	E4	D6
R312	D2	D5
R314	E3	E5
R317	B3	E5
R320	D3	D5
R322	D2	D5
R332	D3	D4
R333	C2	D4
R335	C3	E4
R336	C3	E4
R341	D2	D2
R342	D2	D3
R344	C2	D3
R350	D1	D2
R352	C1	E2
R353	C2	E2
R354	D1	E2
R413	B3	F6
R414	B3	F6
R415	B3	F6
R421	C3	E4
R422	E3	F5
R423	B3	F5
R424	B2	F5
R431	E3	F4
R512	B2	G5
R513	B3	G5
R514	A3	G5
R534	D3	H4
R544	E2	H2
R550	A3	F2
R551	A3	G1
R552	A3	G2
R553	A2	H2
R621	B4	J5
R630	C4	H4
R631	C4	H4
R633	D4	J4
R634	C4	H3
R635	E4	J3
R636	C4	J4
R640	C4	H3
R641	H1	J3
R643	G1	H2
R644	E4	J3
R720	B4	J5
R721	B4	K5
R725	C5	K4
R733	C5	K4
R734	C4	K4
R736	D5	K3
R737	D4	K3
R742	D5	K3
R743	E4	J2
R744	E4	K2
R820	C5	L5
R821	H4	L5
R822	H1	L5
R823	G2	L4
R831	C5	L4
R840	D5	L3
R841	D5	L3
T540	E3	G3
TP123	H4	B4
TP242	C1	C3
TP316	E3	E6
TP331	B1	D4
TP332	D2	D3
TP410	H1	E6
TP431	E3	F4
TP432	E3	F3
TP440	H1	E3
TP516	H1	H6
TP520	A3	G5
TP532	D3	H4
TP533	D3	H3
TP550	A3	F2
TP552	H1	G2
TP623	A4	J4
TP629	C4	J4
TP646	D4	J3
TP650	A2	H1
TP651	D3	H2
TP728	C5	K5
TP748	D5	K3
TP757	H1	K2
TP843	H1	L3
U210	G4	C1
U416	B3	F6
U834	G2	L4
U842	G1	L2

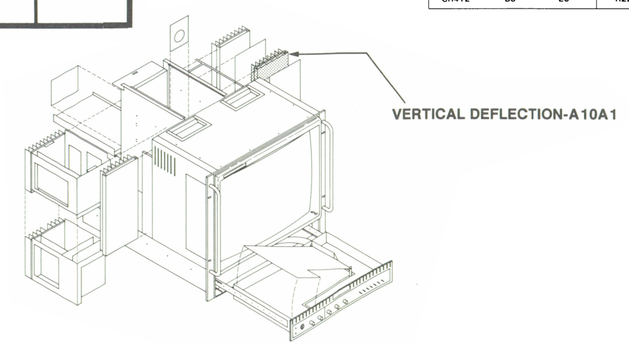

VERTICAL DEFLECTION-A10A1

Static Sensitive Devices
See Maintenance Section

COMPONENT NUMBER EXAMPLE

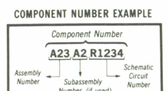

Chassis-mounted components have no Assembly Number prefix—see end of Replaceable Electrical Parts List.

NOTE
GROUND IS REFERENCED TO THE HORIZONTAL CENTER LINE OF THE GRATICULE UNLESS LABELED OTHERWISE.

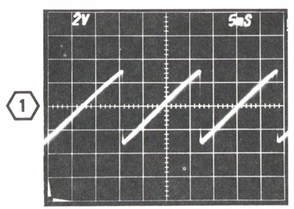

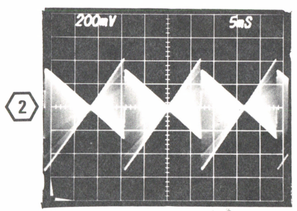

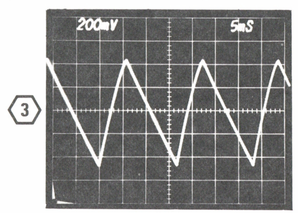

AC Coupled

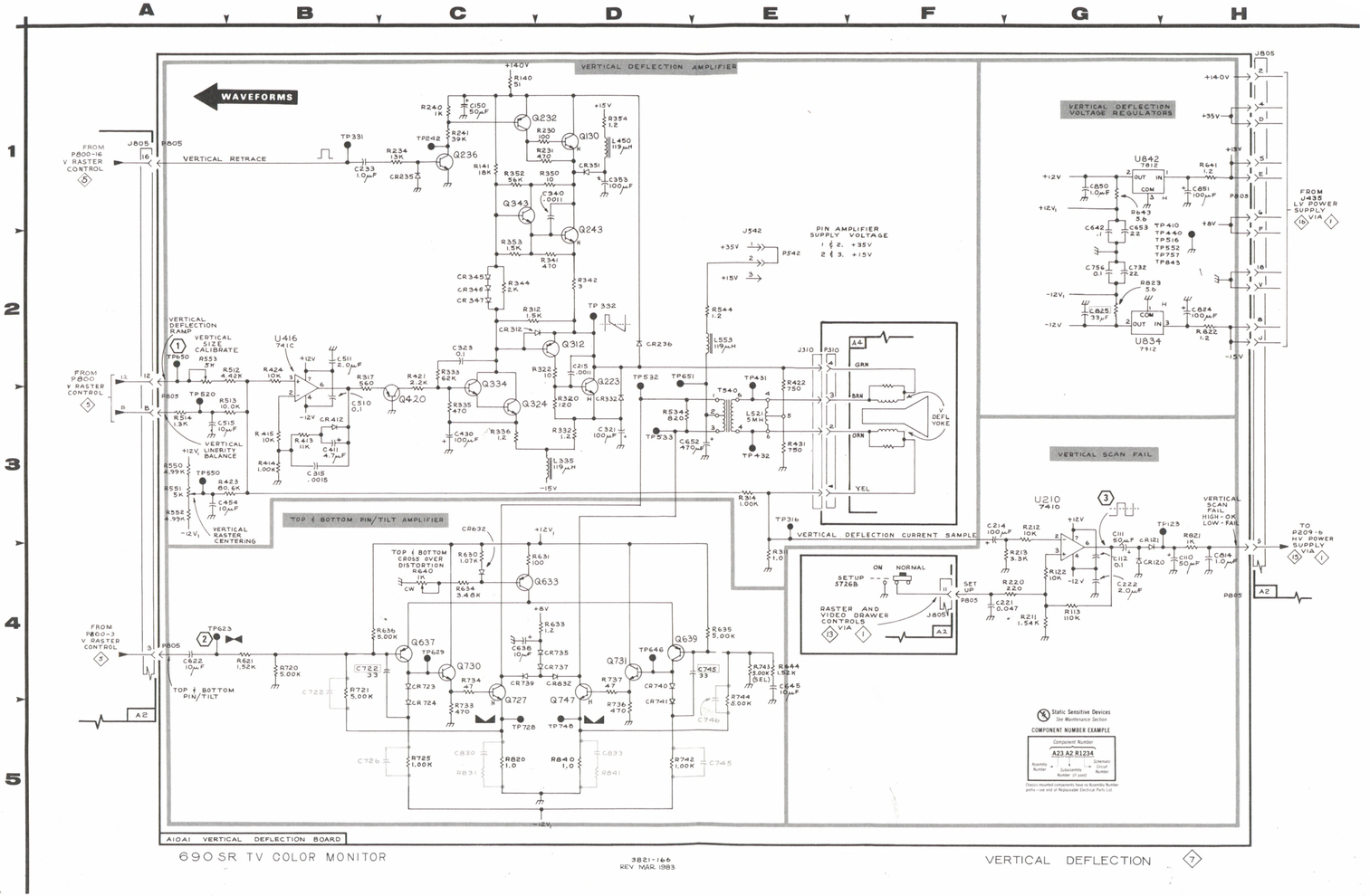

690 SR TV COLOR MONITOR

3821-166
REV MAR 1983

VERTICAL DEFLECTION 7

3821-135

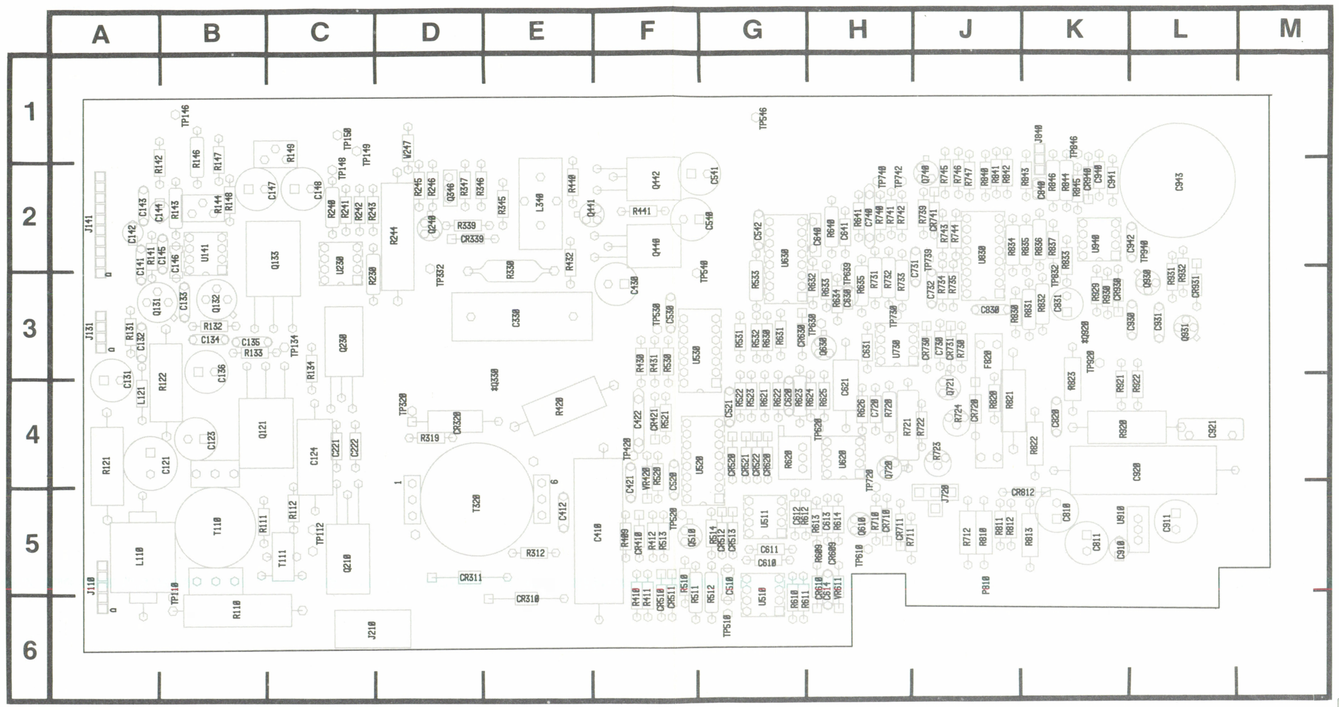

Fig. 12-12. A11A1 Horizontal board.

HORIZONTAL DEFLECTION DIAGRAM 8

ASSEMBLY A11A1 *Partial A11A1 also shown on diagram 9.*

CIRCUIT NUMBER	SCHEM LOCATION	BOARD LOCATION
C131	F2	A3
C330	G3	E3
C410	G2	F5
C412	D3	E5
C421	E4	F4
C422	E4	F4
C430	F4	F3
C510	G4	G5
C520	D5	F4
C521	C4	G4
C530	D3	F3
C540	F4	G2
C541	F2	G2
C542	B4	G2
C610	G5	G5
C611	G5	G5
C612	F4	G5
C613	E2	H5
C614	G4	H5
C620	E2	G4
C621	B2	H4
C630	C1	H3
C631	B2	H3
C640	E3	H2
C641	E2	H2
C720	A2	H4
C730	B2	J3
C731	D1	J3
C732	B2	J3
C740	F3	H2
C820	F1	K4
C840	D1	K2
C920	G1	L4
C921	G1	L4
C930	E2	L3
C931	F1	L3
C940	E1	K2
C941	E1	K2
C942	E1	L2
C943	G1	L2
CR310	G3	E6
CR311	G3	D5
CR320	E4	D4
CR339	F4	D2
CR410	E4	F5
CR421	C3	F4
CR510	E4	F6
CR511	E4	F6
CR512	G5	G5
CR513	G5	G5
CR520	G5	G4
CR521	H5	G4
CR522	H5	G4
CR609	E2	H5
CR610	G4	H5
CR620	H5	G4
CR630	A2	G3
CR710	H4	H5
CR711	G4	H5
CR720	G2	J4
CR730	B2	J3
CR731	B2	J3
CR930	F1	K3
CR931	F1	L3
CR940	E1	K2
F820	G2	J3
J141	C1	A2
J141	D3	A2
J210	H2	C6
J720	G1	J5
J840	D2	K1
L340A	F2	E2
L340B	F4	E2
P810	C1	J5
P810	H2	J5
Q240	F4	D2
Q330	G3	E4
Q346	F4	D2
Q440	F3	F2
Q441	F3	F2
Q442	F3	F2
Q510	D4	F5
Q610	G4	H5
Q630	A4	H3
Q720	F2	H4
Q721	E2	J4
Q740	C1	J2
Q920	G1	K4
Q930	F1	L3
Q931	G1	L3
R111	H5	B5
R244	F3	D2
R245	F4	D2
R246	F4	D2
R312	G3	E5
R319	G3	D4
R330	F3	E3
R339	F4	D2
R345	F4	E2
R346	F4	D2
R347	F4	D2
R409	D3	F5
R410	E4	F6
R411	E4	F6
R412	E4	F5
R420	E4	E4
R430	D3	F3
R431	D3	F3
R432	F3	E2
R440	F2	F2
R441	F2	F2
R510	D4	F5
R511	G5	F6
R512	G4	C6
R513	D4	F5
R514	G5	G5
R520	C4	F4
R521	C4	F4
R522	D5	G4
R523	C4	G4
R530	E3	F3
R531	D2	G3
R532	E2	G3
R533	B4	G3
R609	E2	H5
R610	G5	C6
R611	G5	C6
R612	G4	G5
R613	G4	H5
R614	G4	H5
R620	A2	G4
R621	C4	G4
R622	E2	G4
R623	A2	G4
R624	A2	H4
R625	A4	H4
R626	A2	H4
R630	B4	G3
R631	B4	G3
R632	E3	H3
R633	C5	H3
R634	C1	H3
R635	C1	H3
R640	E2	H2
R641	F3	H2
R710	G4	H5
R711	H4	H5
R720	F2	H4
R721	F1	H4
R722	E1	J4
R723	F2	J4
R724	F2	J4
R730	B2	J3
R731	D1	H3
R732	C1	H3
R733	D1	H3
R740	F3	H2
R741	C1	H2
R742	C1	H2
R745	C1	J2
R820	E2	J4
R821	G1	J4
R822	G1	K4
R823	F1	K4
R830	C2	J3
R831	C2	K3
R832	C2	K3
R833	C2	K2
R834	C1	J2
R835	C2	K2
R836	C2	K2
R837	D1	K2
R841	D2	J2
R842	C2	J2
R843	D2	K2
R844	E1	K2
R845	E1	K2
R846	E1	K2
R920	G1	K4
R921	G1	K4
R922	G1	L4
R929	E1	K3
R930	F1	K3
R931	F1	L3
R932	F1	L3
T110	H3	B5
T111	H3	C5
T320	G2	D5
TP110	H4	A6
TP149	D3	C2
TP150	E5	C1
TP320	G3	D4
TP332	F3	D3
TP420	C3	F4
TP510	F5	C6
TP520	D4	F5
TP530	D3	F3
TP610	G4	H5
TP620	A2	H4
TP630	B4	H3
TP639	C1	H3
TP720	F2	H4
TP730	C1	H3
TP739	D1	J2
TP740	F3	H2
TP742	C1	H2
TP832	C1	K3
TP846	E1	K1
TP920	G1	K3
TP940	E1	L2
U510	G5	C6
U511	E2	G5
U520	E5	G4
U530A	C4	F3
U530B	C3	F3
U530C	E3	F3
U530D	C3	F3
U620	A2	H4
U630A	B4	G2
U630B	E3	G2
U730A	B2	H3
U730B	D1	H3
U830	C2	J2
U940A	E1	K2
U940B	D1	K2
VR420	C3	F4
VR611	G4	H5
W247	F5	D1

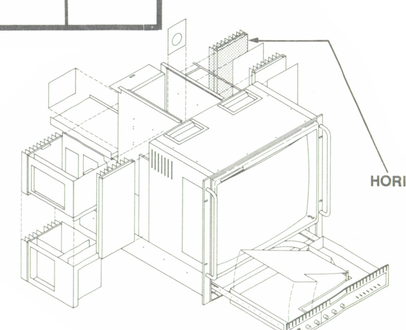

HORIZONTAL DEFLECTION-A11A1

Static Sensitive Devices
See Maintenance Section

COMPONENT NUMBER EXAMPLE

Chassis-mounted components have no Assembly Number prefix—see end of Replaceable Electrical Parts List.

NOTE
GROUND IS REFERENCED TO THE HORIZONTAL CENTER LINE OF THE GRATICULE UNLESS LABELED OTHERWISE.

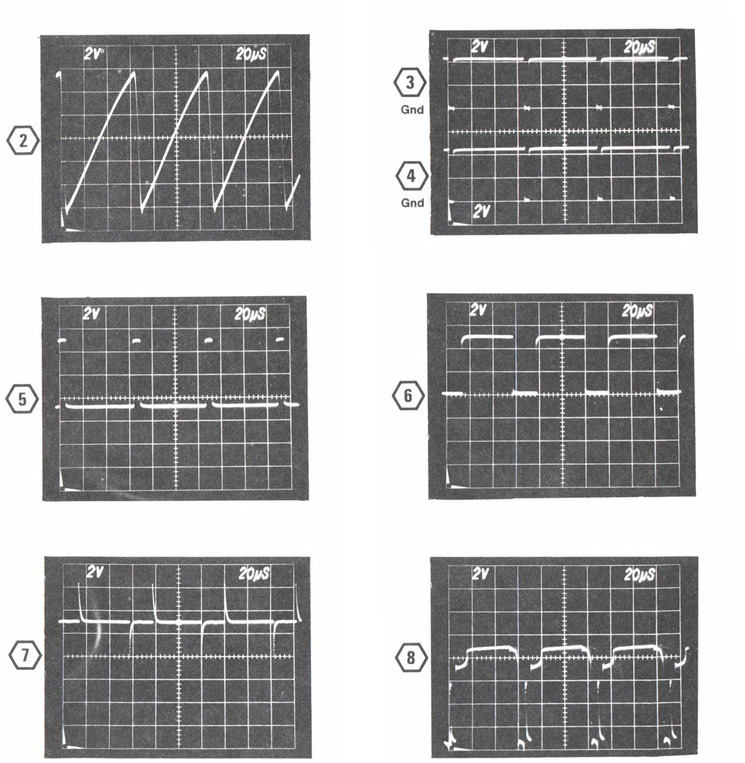

3821-137

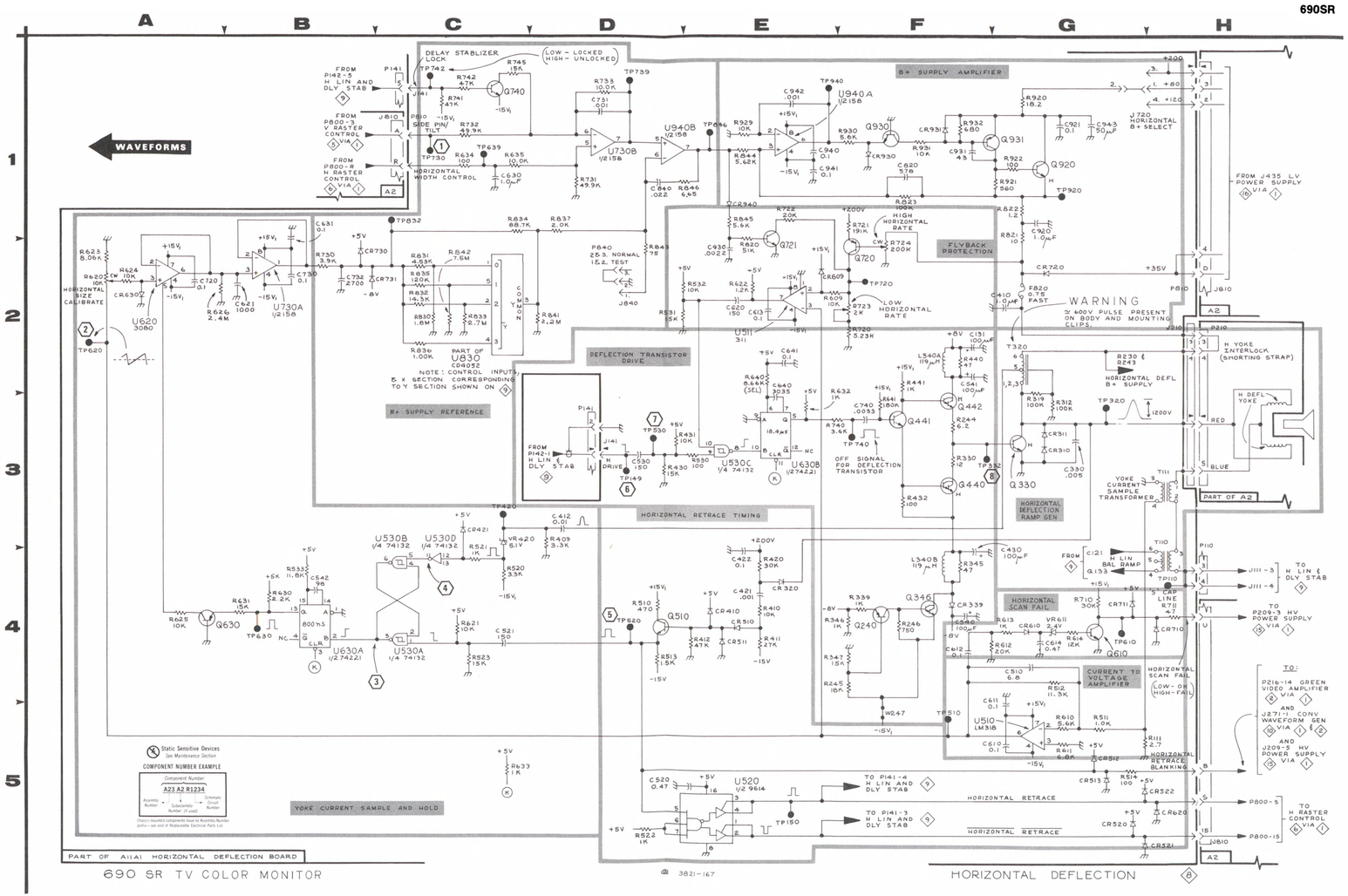

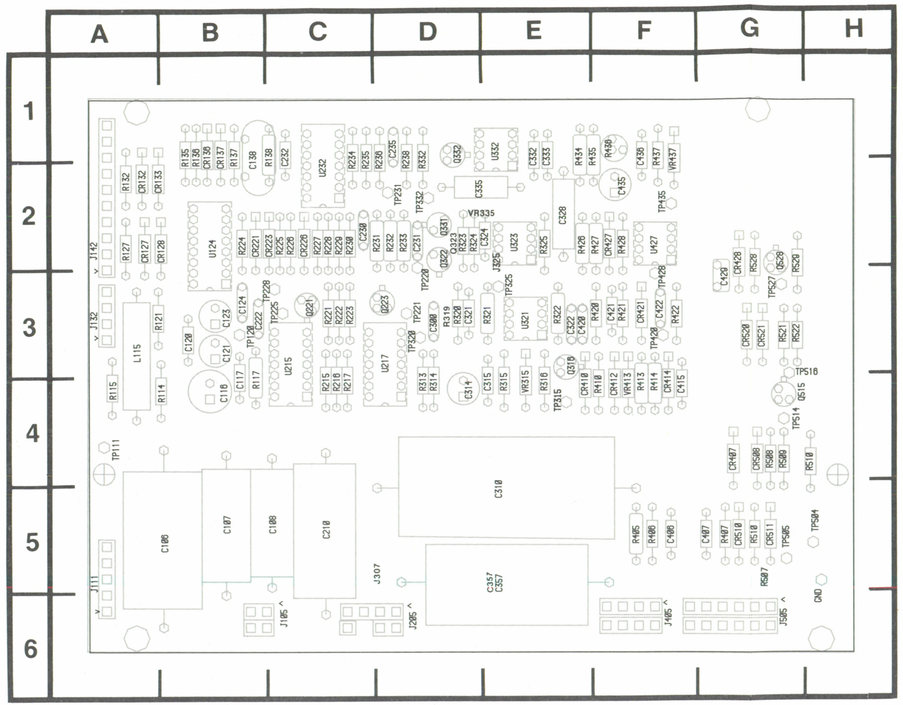

Fig. 12-13. A11A2 Horizontal Delay Stabilizer board.

Static Sensitive Devices
See Maintenance Section

COMPONENT NUMBER EXAMPLE

Chassis-mounted components have no Assembly Number prefix—see end of Replaceable Electrical Parts List.

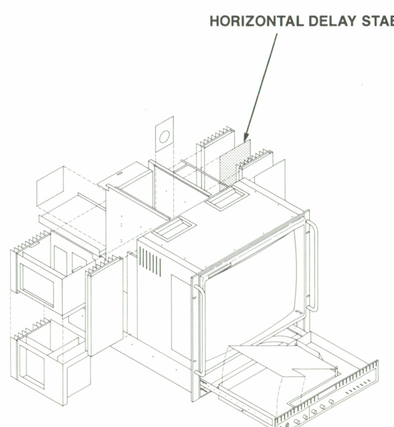

REV JUN 1984

HORIZONTAL LINEARITY DELAY STABALIZER DIAGRAM 9

ASSEMBLY A11A2

CIRCUIT NUMBER	SCHEM LOCATION	BOARD LOCATION
C106	C3	B5
C107	D3	B5
C108	E3	C5
C116	C5	B4
C117	B2	B4
C120	B1	B3
C121	C5	B3
C123	C4	B3
C124	B1	B3
C138	C1	B2
C210	E3	C5
C222	C2	B3
C230	C1	C2
C231	C1	D2
C232	C1	C2
C235	D1	D1
C300	D1	D3
C310	E3	E5
C314	F3	D4
C315	G3	E4
C321	F2	D3
C322	G2	E3
C324	E3	E2
C328	F3	E2
C332	F1	E2
C333	F1	E2
C335	E1	D2
C357*	E3	E5
C406	C4	F5
C407	C5	G5
C415	G1	F4
C420	G2	E3
C421	G1	F3
C422	G2	F3
C429	E3	G3
C435	E1	F2
C436	D1	F1
CR127	B2	A2
CR128	B2	B2
CR132	B2	A2
CR133	B2	A2
CR136	B1	B2
CR137	A1	B2
CR221	A1	B2
CR223	B1	C2
CR226	C1	C2
CR407	F5	G4
CR410	G3	E4
CR412	H2	F4
CR414	H2	F4
CR421	H2	F3
CR427	D2	F2
CR428	F3	G2
CR508	F5	G4
CR510	F5	G5
CR511	F5	G5
CR520	F4	G3
CR521	F4	G3
J105	D3	C6
J111	C3	A5
J132	C4	A3
J142	A1	A2
J142	F4	A2
J142	H2	A2
J205	D4	D6
J325	E2	E2
J405	D4	F5
J505	D5	G6
L115	C5	A3
Q221	D2	C3
Q223	F2	D3
Q316	G2	E3
Q322	D2	D2
Q323*	D2	D2
Q331	C2	D2
Q332	E1	D1
Q515	E5	G4
Q528	E3	G2
R114	C5	B4
R115	C5	A4
R117	B2	B4
R121	C4	B3
R127	A2	A2
R132	A2	A2
R135	A1	B2
R136	B1	B2
R137	A1	B2
R138	C1	C2
R215	D2	C4
R216	E1	C4
R217	F2	C4
R221	D2	C3
R222	D2	C3
R223	F2	C3
R224	B1	B2
R225	B1	C2
R226	C1	C2
R227	A1	C2
R228	C1	C2
R229	C1	C2
R230	C1	C2
R231	C1	D2
R232	C2	D2
R233	C2	D2
R234	C1	C2
R235	C2	C2
R236	D1	D1
R238	D1	D2
R313	D1	D4
R314	D1	D4
R315	F3	E4
R316	H2	E4
R319*	D1	D3
R320	C1	D3
R321	F2	E3
R322	G2	E3
R323	D2	D2
R324	D1	D2
R325	E3	E2
R332	D1	D2
R405	D3	F5
R406	C4	F5
R407	E5	G5
R410	G3	F4
R413	H2	F4
R414	H2	F4
R420	G2	F3
R421	G2	F3
R422	G1	F3
R426	E2	E2
R427	D3	F2
R428	G1	F2
R434	E1	E2
R435	E1	F1
R436	E1	F1
R437	D1	F1
R507	F5	G5
R508	F5	G4
R509	E5	G4
R510	E5	H4
R521	F4	G3
R522	E4	G3
R528	E3	G2
R529	E3	G2
TP111	C3	A4
TP120	B2	B3
TP220	C1	D3
TP221	F2	D3
TP225	C2	C3
TP228	B1	C3
TP231	C1	D2
TP315	H2	E4
TP320	E2	D3
TP325	F2	E3
TP332	G1	D2
TP420	G1	F3
TP428	H1	F3
TP435	G1	F2
TP504	E3	H5
TP505	E5	G5
TP514	E5	G4
TP516	E4	H3
TP527	E3	G3
U124A	B1	B2
U124B	B2	B2
U215	C2	C3
U217A	E2	D3
U217B	F2	D3
U232	C1	C2
U321A	G2	E3
U321B	F2	E3
U323	E2	E2
U332	E1	E1
U427	G1	F2
VR315	F3	E4
VR335*	E1	D2
VR413	G3	F4
VR437	D1	F1

ASSEMBLY A11A1

Partial A11A1 also shown on diagram 8.

CIRCUIT NUMBER	SCHEM LOCATION	BOARD LOCATION
C121	H4	B4
C123	H4	B4
C124	B4	C4
C131	B4	A3
C132•	H4	A3
C133•	H5	B2
C134•	H5	B2
C135•	H4	B2
C136	H5	B3
C141	H5	A2
C142	G5	A2
C143	G5	A2
C144	G5	A2
C145	G5	B2
C146	G4	B2
C147	A3	C2
C148	A3	C2
C221	B3	C4
C222	B3	C4
C810	A5	K5
C811	A4	K5
C830	G5	J3
C831	A5	K3
C910	B5	K5
C911	A5	L5
CR741	G5	J2
CR812	G5	J5
J110	C3	A5
J131	C5	A3
J141	A1	A2
J141	A2	A2
J141	G3	A2
L110	B3	A5
L121•	H4	A4
P810	A1	J5
P810	G5	J5
Q121	H4	B4
Q131	H4	A3
Q132	H5	B2
Q133	H5	C2
Q210	B4	C5
Q230	B3	C3
R110	B3	B6
R112	B4	C5
R121	H5	A4
R122	H4	B4
R131•	H4	A3
R132	H5	B2
R133	H4	B3
R134	B3	C3
R136*	H4	B2
R141	H5	A2
R142	G5	A1
R143	G4	B2
R144	G4	B2
R146	G5	B2
R147	G5	B2
R148	G5	B2
R149	A3	C1
R230	A3	C3
R240	A3	C2
R241	B3	C2
R242	B3	C2
R243	A3	C2
R712	A4	J5
R734	G4	J3
R735	G4	J3
R739	G5	J2
R743	G4	J2
R744	G4	J2
R746	G3	J2
R747	G3	J2
R810	A4	J5
R811	G5	J5
R812	A5	J5
R813	A5	K5
R840	G3	J2
TP112	B3	C5
TP134	H4	C3
TP146	A5	B1
TP148	A3	C2
TP540	B5	F3
TP546	A1	G1
U141	G5	B2
U230	B3	C2
U830	G3	J2
U910	B4	L5

***See Parts List for serial number ranges.**

NOTE
GROUND IS REFERENCED TO THE HORIZONTAL CENTER LINE OF THE GRATICULE UNLESS LABELED OTHERWISE.

9

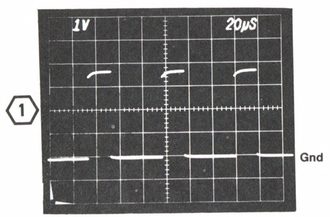

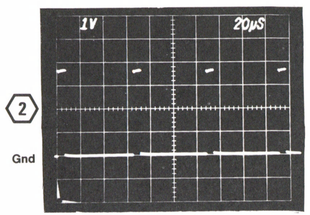

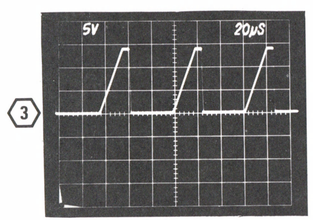

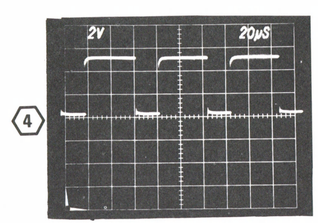

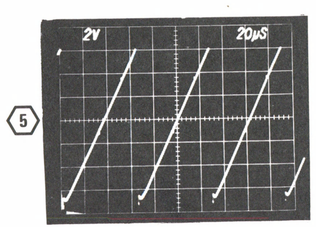

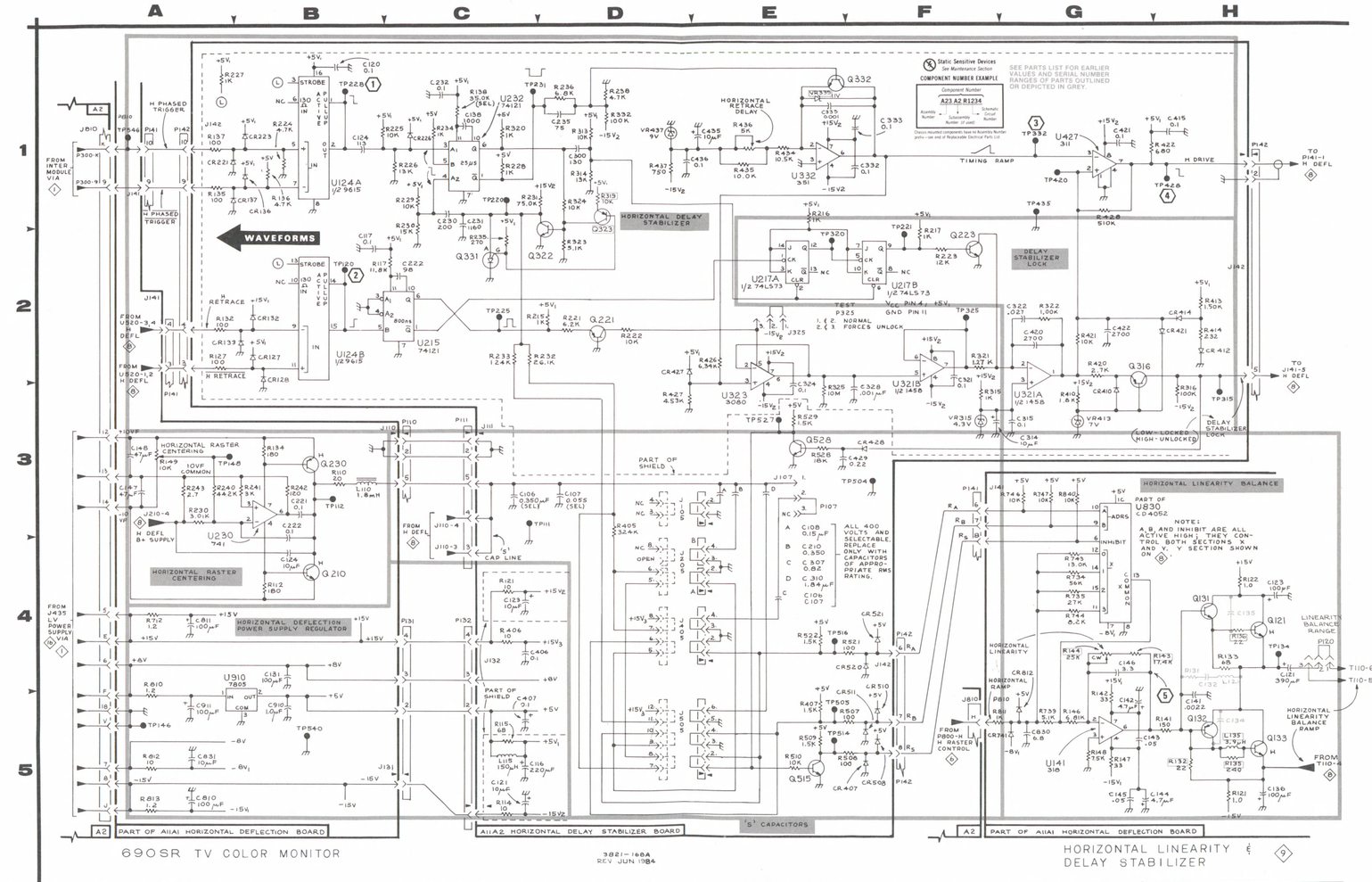

3821-139

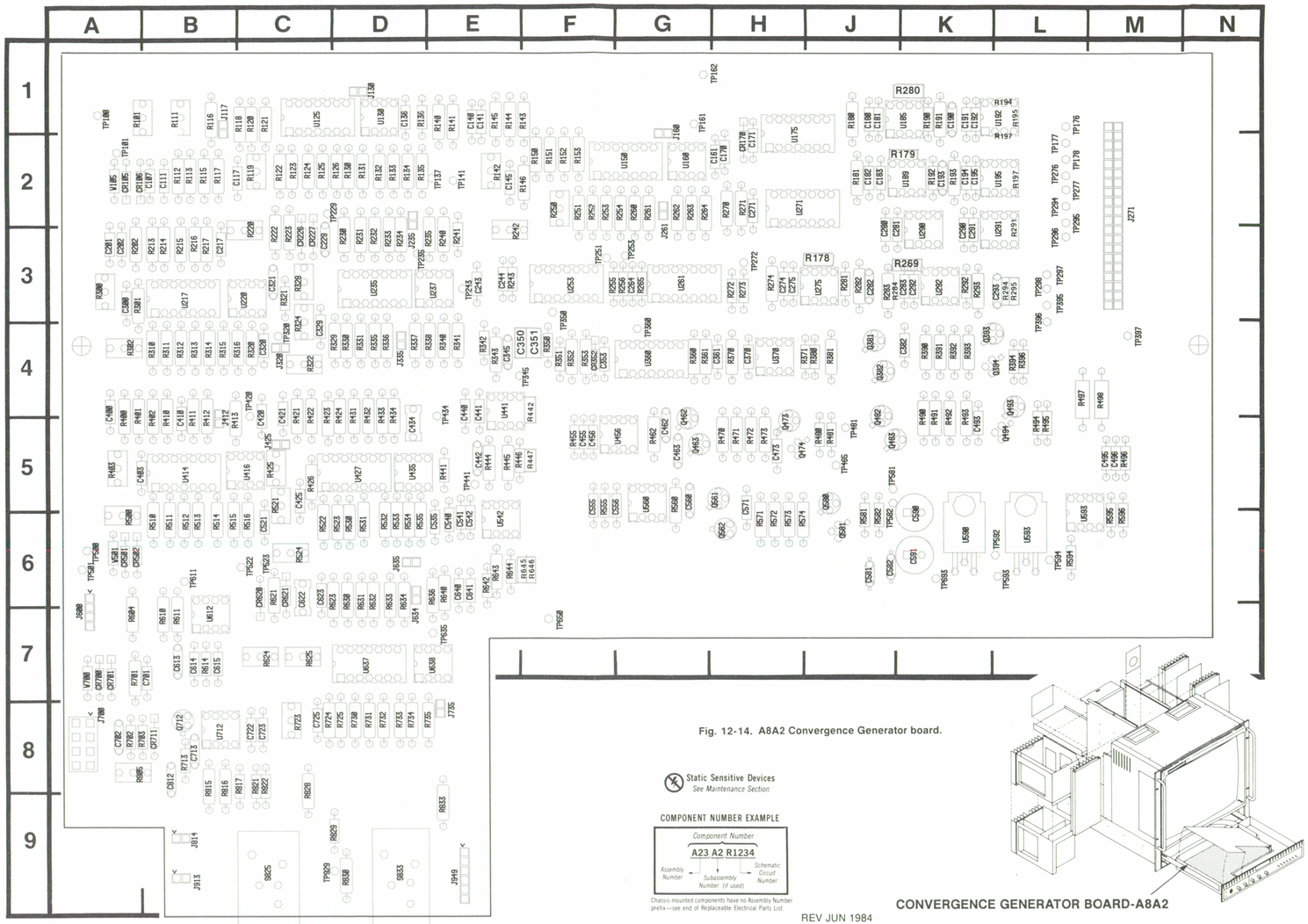

Fig. 12-14. A8A2 Convergence Generator board.

CONVERGENCE GENERATOR BOARD-A8A2

REV JUN 1984

CONVERGENCE WAVEFORM GENERATORS DIAGRAM 10

ASSEMBLY A8A2 *Partial A8A2 also shown on diagrams 11 and 13.*

CIRCUIT NUMBER	SCHEM LOCATION	BOARD LOCATION
C107	D1	B2
C111	D1	B2
C117	E1	B2
C136	E1	D1
C140	G3	E1
C141	G2	E1
C145	H3	E2
C161	H3	H2
C170	H3	H2
C201	A2	A3
C202	A1	A3
C217	C1	B3
C229	C1	C3
C243	F2	E3
C300	B1	A3
C320	C1	C4
C321	C1	C3
C329	E3	C4
C345	F3	E4
C400	A4	A5
C403	B5	A5
C410	A4	B5
C420	B4	C6
C421	D3	C5
C425	E4	C5
C434	E3	D5
C440	F4	E5
C441	F4	E5
C442	F4	E5
C521	B4	C6
C535	E4	E6
C540	E4	E6
C541	F5	E6
C542	F5	E6
C613	B3	B7
C614	B3	B7
C615	B3	B7
C622	C4	C6
C623	D5	C6
C640	E5	E6
C641	E5	E6
C701	A2	B7
C702	B3	A8
C713	C4	B8
C722	C4	C8
C723	C4	C8
C725	E5	C8
C812	C4	B8
CR105	A1	A2
CR106	A1	A2
CR226	D1	C3
CR227	C1	C3
CR501	A3	A6
CR502	A3	A6
CR620	C4	C6
CR621	C4	C6
CR700	A3	A7
CR701	A3	A7
CR711	C3	B8
J117	D1	B1
J130	D1	D1
J160	H2	G2
J235	D2	D3
J261	G3	G3
J271	A1	M2
J271	A2	M2
J271	F1	M2
J271	F5	M2
J320	A1	C4
J335	D3	D4
J412	A4	B5
J425	D3	C5
J600	A3	A7
J634	D4	D7
J635	D4	D6
J700	B2	A8
J735	D5	E8
Q712	C3	B8
R101	D1	A1
R111	D1	B1
R112	D1	B2
R113	D1	B2
R115	D1	B2
R116	E1	B1
R117	D1	B2
R118	D1	C1
R119	E1	C2
R120	E1	C1
R121	D1	C1
R122	E1	C2
R123	E1	C2
R124	D1	C2
R125	D1	C2
R126	E1	D2
R130	D2	D2
R131	D1	D2
R132	D2	D2
R133	E1	D2
R134	E1	D2
R135	E1	D2
R136	F1	D1
R140	F1	E1
R141	F1	E1
R142	G2	E2
R143	G2	F1
R144	G2	E1
R145	G2	E1
R146	H3	F2
R150	G3	F2
R151	G2	F2
R152	H3	F2
R153	G2	F2
R202	A1	A3
R213	A1	B3
R214	A1	B3
R215	A1	B3
R216	B1	B3
R217	C1	B3
R220	C1	C3
R222	C1	C3
R223	C1	C3
R230	D2	D3
R231	D2	D3
R232	E2	D3
R233	D2	D3
R234	D2	D3
R235	F2	D3
R240	F2	E3
R241	F2	E3
R242	G2	E3
R250	H3	F2
R251	H2	F2
R252	H3	F2
R253	G3	F2
R254	G3	G2
R260	H2	G2
R261	G3	G2
R262	H2	G2
R263	H2	G2
R264	H2	G2
R300	A1	A3
R301	B1	A3
R302	B1	A4
R310	B1	B4
R311	B1	B4
R312	B1	B4
R313	A1	B4
R314	B1	B4
R315	B1	B4
R316	B1	B4
R320	B1	C4
R321	C1	C3
R322	E3	C4
R324	D2	C4
R328	D2	C3
R329	E3	D4
R330	E2	D4
R331	E2	D4
R335	D2	D4
R336	D3	D4
R337	E2	D4
R338	E2	E4
R340	E2	E4
R341	E2	E4
R343	F3	E4
R400	B5	A5
R401	A4	A5
R402	A4	B5
R403	A4	A5
R410	A4	B5
R411	A5	B5
R412	B5	B5
R413	B4	B5
R421	D3	C5
R422	D3	C5
R423	D4	C5
R424	D4	D5
R425	D3	C5
R426	E4	C5
R431	E4	D5
R432	D3	D5
R433	D3	D5
R434	E3	D5
R441	F4	E5
R442*	**F4**	**E5**
R444	F4	E5
R445	F4	E5
R446	F4	E5
R447*	**F3**	**E5**
R500	B5	A6
R510	B4	B6
R511	B4	B6
R512	A5	B6
R513	A4	B6
R514	A4	B6
R515	B4	B6
R516	B4	C6
R521	D4	C5
R522	E3	C6
R523	E4	D6
R524	E4	C6
R530	D4	D6
R531	D4	D6
R532	E3	D6
R533	D4	D6
R534	E3	D6
R535	E3	D6
R604	A2	A7
R610	A3	B7
R611	B3	B7
R614	A3	B7
R621	C3	C6
R623	D4	C6
R624	D5	C7
R625	D5	C7
R630	D5	D6
R631	D5	D6
R632	D5	D6
R633	E5	D6
R634	D4	D6
R636	E4	E6
R640	D4	E6
R642	D4	E6
R643	F5	E6
R644	F5	E6
R645*	**F4**	**E6**
R646*	**F5**	**E6**
R701	A2	A7
R701	C3	A7
R702	B3	A8
R703	B3	A8
R713	C4	B8
R723	E5	C8
R724	E5	C8
R725	E4	D8
R730	E5	D8
R731	D5	D8
R732	D5	D8
R733	E5	D8
R734	E5	D8
R735	E5	D8
R805	C4	A8
R815	C4	B8
R816	C4	B8
R817	C4	C8
TP100	B2	A1
TP101	A1	A2
TP137	F1	E2
TP141	F1	E2
TP161	H2	G1
TP229	D2	D2
TP235	F2	D3
TP243	F2	E3
TP320	C1	C4
TP345	F3	E4
TP420	C3	C4
TP434	F3	E5
TP441	F4	E5
TP500	A3	A6
TP501	A3	A6
TP523	D4	C6
TP611	B3	B6
TP635	F4	E7
U125	E1	C1
U130A	E1	D1
U130B	F1	D1
U150	H3	G2
U160	H2	G2
U217	B1	B3
U220A	B1	C3
U220B	C1	C3
U235	E3	D3
U237A	E2	E3
U237B	F2	E3
U414	B5	B5
U416	B4	C5
U427	E4	D5
U435	E4	D5
U441	F4	E4
U542	F5	E6
U612	B3	B7
U637	E5	D7
U638	E5	E7
U712	C4	B8
W105	A1	A2
W501	A3	A6
W700	A3	A7

***See Parts List for serial number ranges.**

NOTE
GROUND IS REFERENCED TO THE HORIZONTAL CENTER LINE OF THE GRATICULE UNLESS LABELED OTHERWISE.

10

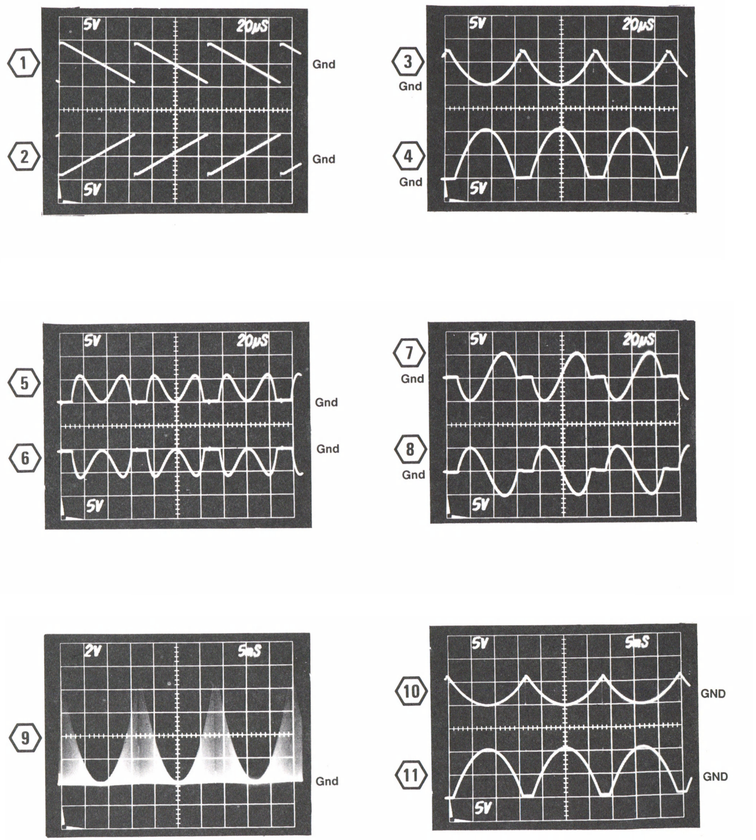

3821-141

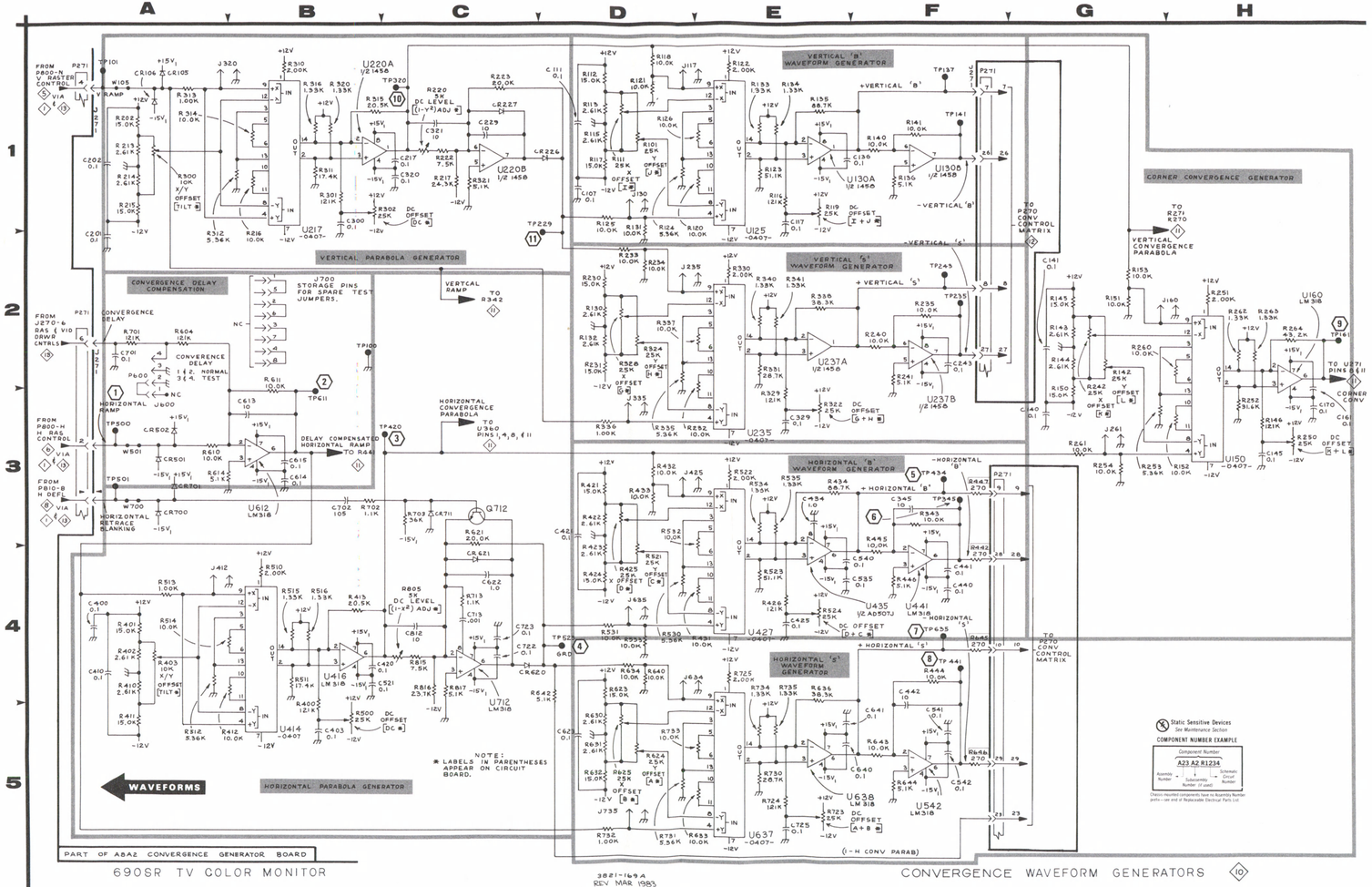

CONVERGENCE WAVEFORMS PROCESSOR DIAGRAM 11

ASSEMBLY A8A2 *Partial A8A2 also shown on diagrams 10 and 13.*

CIRCUIT NUMBER	SCHEM LOCATION	BOARD LOCATION
C171	B2	H2
C180	G3	J1
C181	G4	J1
C182	G5	J1
C183	G5	J1
C190	F3	K1
C191	G3	K1
C192	G3	K1
C193	F5	K2
C194	G4	K2
C195	G4	K2
C244	A1	E3
C264	A3	G3
C271	B1	H2
C274	G1	H3
C275	G1	H3
C280	G1	J3
C281	G1	J3
C282	F1	J3
C283	G3	K3
C290	G2	K3
C291	G2	K3
C292	G2	K3
C293	F2	L3
C350*	A2	E4
C351*	A2	E4
C353	B4	F4
C361	C1	H4
C370	C1	H4
C382	D1	K4
C455	C4	F5
C456	C4	F5
C462	C3	G5
C463	D4	G5
C473	D4	H5
C493	D2	K5
C555	C4	F5
C556	C5	F5
C560	C4	G5
C571	D5	H5
CR170	B2	H2
CR352	B4	F4
J271	E1	M2
J271	E4	M2
J271	H1	M2
Q381	D1	J4
Q382	D1	J4
Q393	E1	K4
Q394	D1	L4
Q462	D4	G5
Q463	D4	G5
Q473	C4	H5

CIRCUIT NUMBER	SCHEM LOCATION	BOARD LOCATION
Q474	D4	H5
Q482	D2	J5
Q483	D2	J5
Q493	E2	L4
Q494	D2	L5
Q561	D5	H5
Q562	D5	H6
Q580	E4	J5
Q581	D5	J6
R178*	F4	J3
R179*	F4	K2
R180	F4	J1
R181	F5	J1
R190	F4	K1
R191	G3	K1
R192	F5	K2
R193	G5	K2
R194*	G4	L1
R195*	H3	L1
R196*	G5	L1
R197*	H4	L3
R243	A1	E3
R255	A1	F3
R256	A1	G3
R265	B3	G3
R269*	F2	
R270	B1	H2
R271	B1	H2
R272	A3	H3
R273	A2	H3
R274	F1	H3
R280*	F3	K1
R281	F1	J3
R282	G1	J3
R283	F2	J3
R284*	G1	J3
R291*	H2	L3
R292	F3	K3
R293	G2	K3
R294*	G2	L3
R295*	H1	L3
R342	A1	E4
R350	A1	F4
R352	C5	F4
R353	C5	F4
R360	C4	G4
R361	C4	G4
R370	C1	H4
R371	C1	H4
R380	C2	J4
R381	C1	J4
R390	D1	K4
R391	D1	K4
R392	D1	K4
R393	D1	K4
R394	E1	L4
R396	D1	L4
R441	A2	E5
R455	C4	F5
R462	C3	G5
R470	D4	H5
R471	D3	H5
R472	D4	H5
R473	D4	H5
R480	E4	J5

CIRCUIT NUMBER	SCHEM LOCATION	BOARD LOCATION
R481	D4	J5
R490	D2	K5
R491	D2	K5
R492	D2	K5
R493	D2	K5
R494	E2	L5
R495	D2	L5
R555	C5	F5
R560	C4	G5
R571	D5	H6
R572	D4	H6
R573	D5	H6
R574	D4	H6
R581	E5	J6
R582	D5	J6
TP176	H4	L1
TP177	H3	L2
TP178	H5	L2
TP251	B1	F3
TP253	B1	G3
TP272	B2	H3
TP276	H4	L2
TP277	H2	L2
TP294	H2	L2
TP295	H1	L2
TP296	H1	L3
TP297	E1	L3
TP298	E1	L3
TP360	B3	G4
TP395	E2	L3
TP396	E2	L4
TP465	E4	J5
TP481	E4	J5
TP581	E5	J5
TP582	E5	J6
U175	B3	H2
U185	F4	K1
U189	F5	K2
U192	G3	L1
U195	G4	L2
U253	A1	F3
U261	A2	G3
U271	B1	H2
U275	F1	J3
U290	G1	K3
U291	G2	L3
U292	F2	K3
U360	B4	G4
U370A	C2	H4
U370B	C1	H4
U456	C4	G5
U560	C5	G5

***See Parts List for serial number ranges.**

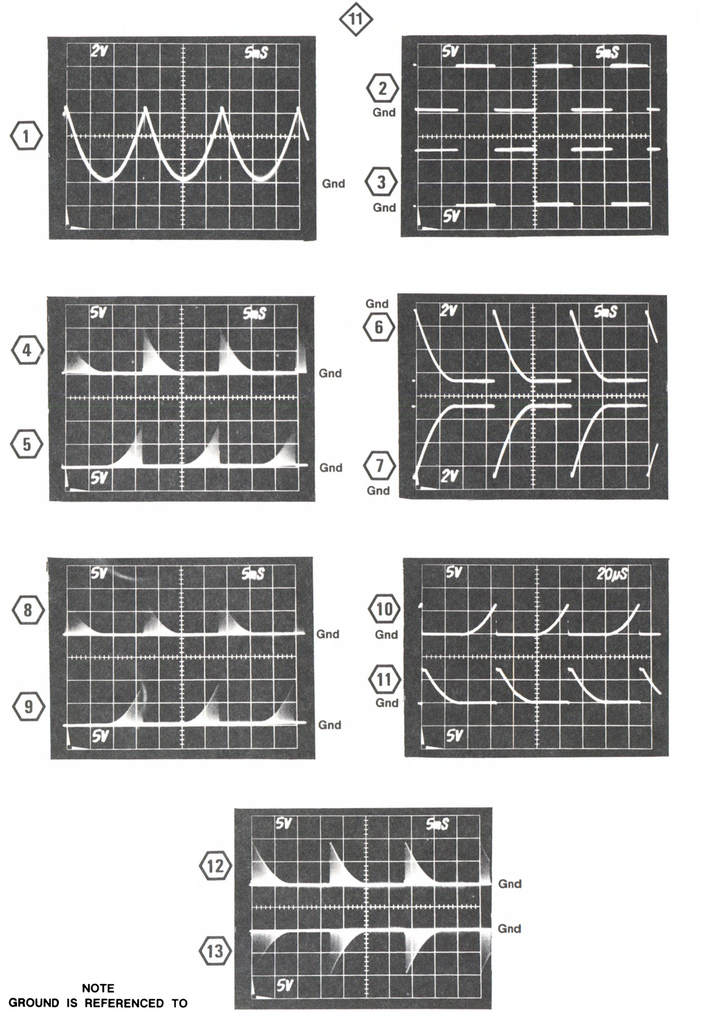

NOTE
GROUND IS REFERENCED TO THE HORIZONTAL CENTER LINE OF THE GRATICULE UNLESS LABELED OTHERWISE.

3821-143

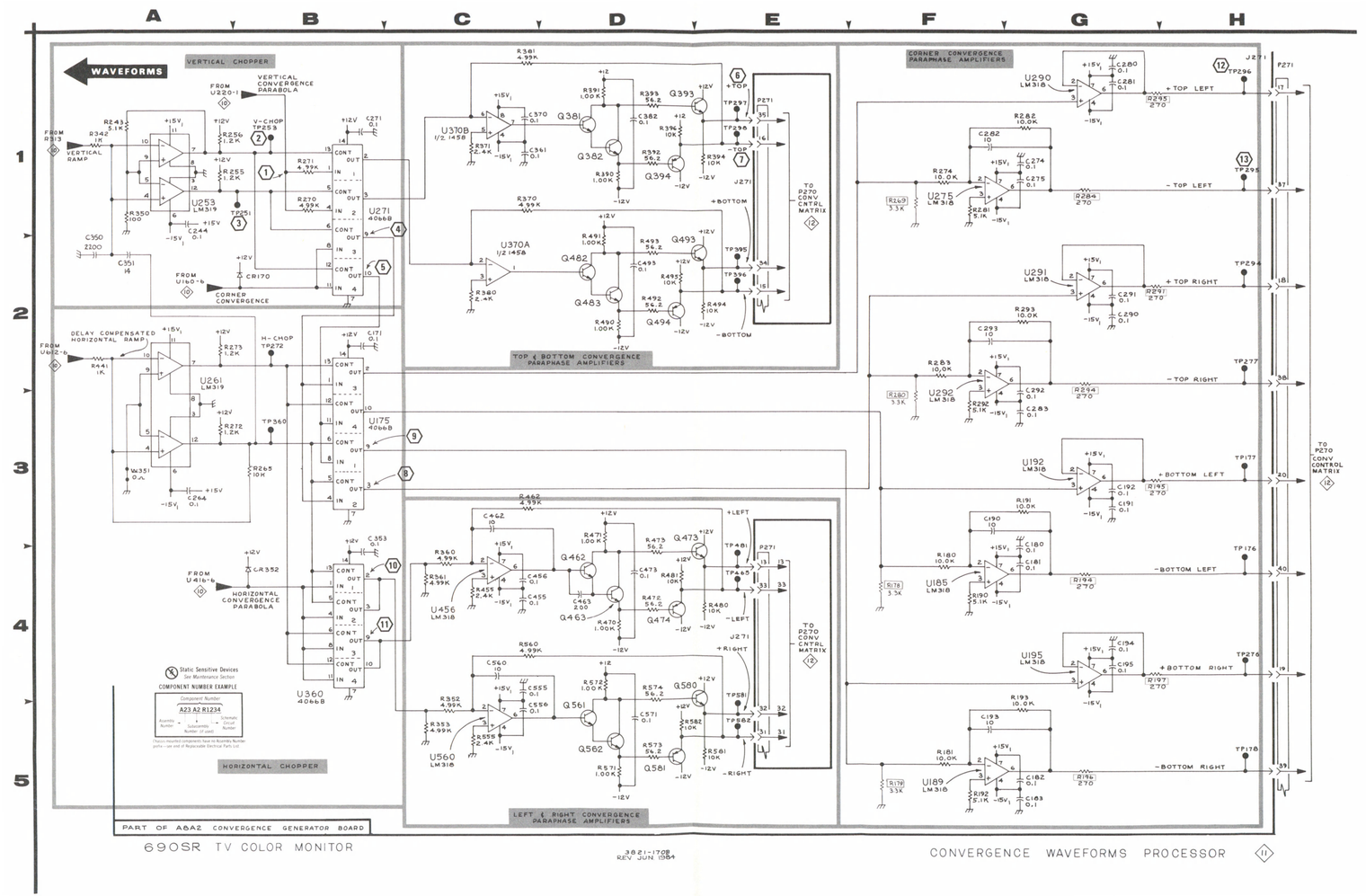

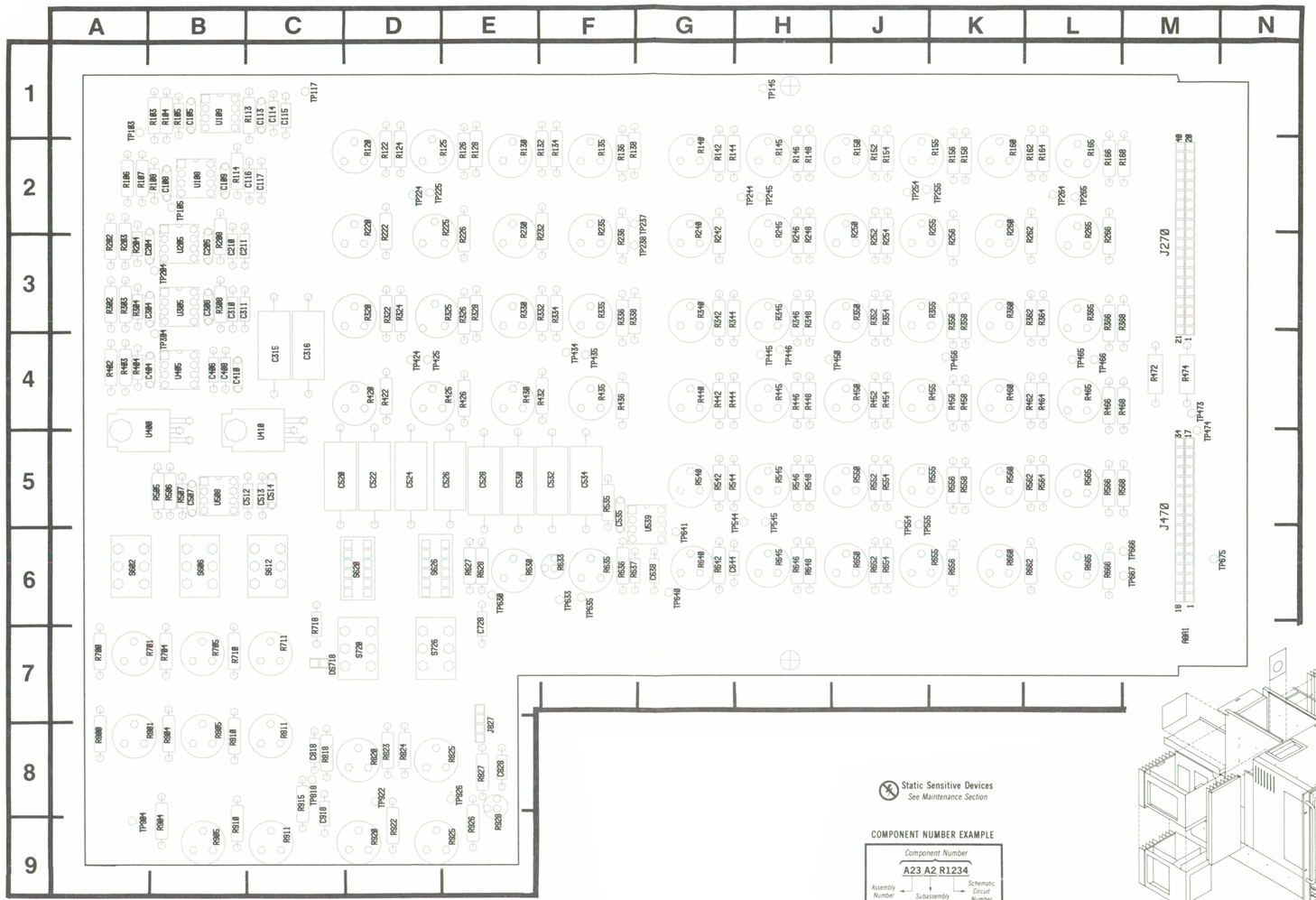

Static Sensitive Devices
See Maintenance Section

COMPONENT NUMBER EXAMPLE

Chassis-mounted components have no Assembly Number prefix—see end of Replaceable Electrical Parts List.

Fig. 12-15. A8A1 Convergence Control board.

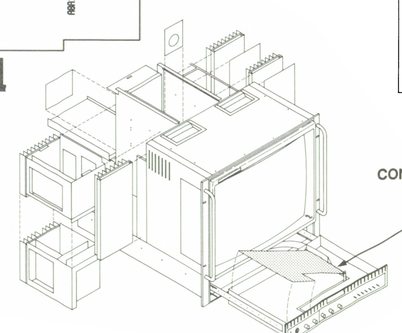

CONVERGENCE CONTROL BOARD-A8A1.

CONVERGENCE CONTROL MATRIX DIAGRAM 12

ASSEMBLY A8A1 *Partial A8A1 also shown on diagram 13.*

CIRCUIT NUMBER	SCHEM LOCATION	BOARD LOCATION
C105	H4	B1
C108	H3	B2
C109	H3	B2
C113	H4	C1
C114	H5	C1
C115	H5	C1
C116	H3	C2
C117	H3	C2
C204	H2	B3
C206	H2	B3
C210	H2	B3
C211	H3	B3
C304	H1	B3
C308	H1	B3
C310	H1	B3
C311	H1	B3
C404	F1	B4
C406	F1	B4
C408	F1	B4
C507	F1	B5
C512	F2	C5
C513	F2	C5
C520	G3	C5
C522	G2	D5
C524	G1	D5
C526	G1	E5
C528	G5	E5
C530	G4	E5
C532	G3	F5
C534	G4	F5
J270	A1	M3
J470	H1	M5
R103	H4	B1
R104	H4	B1
R105	H5	B1
R106	H3	A2
R107	H3	A2
R108	H4	B2
R113	H4	C1
R114	H3	B2
R120	D1	D2
R122	D1	D2
R124	D1	D2
R125	D1	E2
R126	E1	E2
R128	E1	E2
R130	D2	E2
R132	D2	F2
R134	D2	F2
R135	D2	F2
R136	E2	F2
R138	E2	F2
R140	A3	G2
R142	A3	G2
R144	A3	G2
R145	B3	H2
R146	B3	H2
R148	B3	H2
R150	A1	J2
R152	A1	J2
R154	A1	J2
R155	B1	K2
R156	B1	K2
R158	B1	K2
R160	A4	K2
R162	A4	L2
R164	A4	L2
R165	B4	L2
R166	B4	L2
R168	B4	M2
R202	H2	A3
R203	H2	A3
R204	H2	A3
R208	H2	B3
R220	E1	D2
R222	E1	D2
R225	E1	E2
R226	E1	E2
R230	E2	E2
R232	E2	F3
R235	E2	F2
R236	E2	F3
R240	B3	G3
R242	B3	G3
R245	B3	H2
R246	B3	H2
R248	A1	H2
R250	B1	J2
R252	B1	J3
R254	B1	J3
R255	B1	K2
R256	B1	K3
R260	B4	K3
R262	B4	L2
R265	B4	L2
R266	B4	L2
R302	H1	A3
R303	H1	A3
R304	H1	A3
R308	H1	B3
R320	D1	D3
R322	D1	D3
R324	D1	D3
R325	D1	E3
R326	E1	E3
R328	E1	E3
R330	D2	E3
R332	D2	F3
R334	D2	F3
R335	D2	F3
R336	E2	F3
R338	E3	F3
R340	A2	G3
R342	A2	G3
R344	A2	G3
R345	B2	H3
R346	B2	H3
R348	B2	H3
R350	D5	J3
R352	D5	J3
R354	D4	J3
R355	D5	K3
R356	E4	K3
R358	E5	K3
R360	A2	K3
R362	A3	L3
R364	A2	L3
R365	B2	L3
R366	B3	L3
R368	B2	M3
R402	G1	A4
R403	F1	A4
R404	F1	A4
R420	E1	D4
R422	E1	D4
R425	E1	E4
R426	E1	E4
R430	E3	E4
R432	E3	F3
R435	E2	F3
R436	E2	F3
R440	B2	G4
R442	B2	G4
R444	A2	G4
R445	B2	H4
R446	B2	H4
R448	B2	H4
R450	E4	J4
R452	E5	J4
R454	D4	J4
R455	E5	K4
R456	E4	K4
R458	E5	K4
R460	B3	K4
R462	B3	L4
R464	A3	L4
R465	B2	L4
R466	B2	L4
R468	B3	M4
R505	G2	B5
R506	F2	B5
R507	F2	B5
R540	A4	G5
R542	A4	G5
R544	A4	G5
R545	B4	H5
R546	B4	H5
R548	B4	H5
R550	A1	J5
R552	A1	J5
R554	A1	J5
R555	B1	K5
R556	B1	K5
R558	B1	K5
R560	A5	K5
R562	A5	L5
R564	A5	L5
R565	B5	L5
R566	B5	L5
R568	B5	M5
R640	B4	G6
R642	B4	G6
R645	B4	H6
R646	B4	H6
R648	A1	H6
R650	B1	J6
R652	B1	J6
R654	B1	J6
R655	B1	K6
R656	B1	K6
R660	B5	K6
R662	B5	L6
R665	B5	L6
R666	B5	L6
S620	G3	D6
S626	G3	D6
TP103	H4	A1
TP105	H3	B2
TP204	H2	B3
TP224	D1	D2
TP225	D1	D2
TP237	D2	G2
TP238	D2	G3
TP244	A3	H2
TP245	A3	H2
TP254	A1	J2
TP255	A1	K2
TP264	A4	L2
TP265	A3	L2
TP304	H1	B4
TP424	D2	D4
TP425	D1	D4
TP434	D3	F3
TP435	D2	F3
TP445	A2	H4
TP446	A2	H4
TP450	D5	J4
TP456	D4	K4
TP465	A2	L4
TP466	A3	L4
TP544	A5	H5
TP545	A4	H5
TP554	A2	J5
TP555	A1	K5
TP666	A5	M6
TP667	A5	M6
U108	H3	B2
U109	H4	B1
U205	H2	B3
U305	H1	B3
U405	F1	B4
U508	F2	B5

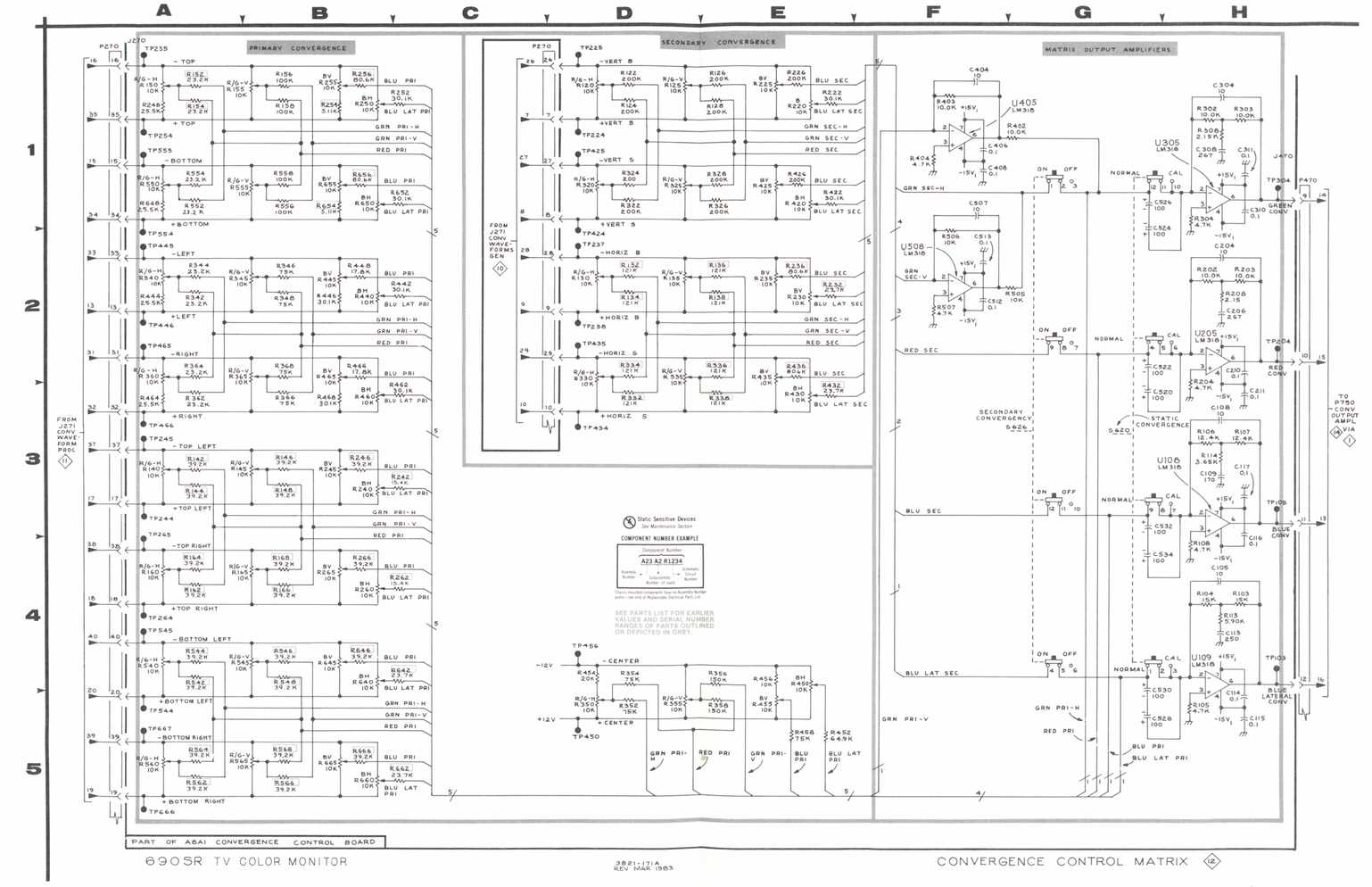
PRIMARY CONVERGENCE
SECONDARY CONVERGENCE
MATRIX OUTPUT AMPLIFIERS
FROM J271 CONV WAVE FORM PROC
FROM J271 CONV WAVE FORMS GEN
TO P750 CONV OUTPUT AMPL
Static Sensitive Devices
See Maintenance Section
COMPONENT NUMBER EXAMPLE
Component Number
A23 A2 R1234
Assembly Number
Subassembly Number (if used)
Schematic Number
Parts mounted components have no Assembly Number prefix – see end of Replaceable Electrical Parts List.
SEE PARTS LIST FOR EARLIER VALUES AND SERIAL NUMBER RANGES OF PARTS OUTLINED OR DEPICTED IN GREY.
PART OF A8A1 CONVERGENCE CONTROL BOARD
690SR TV COLOR MONITOR
3821-171A REV MAR 1983
CONVERGENCE CONTROL MATRIX

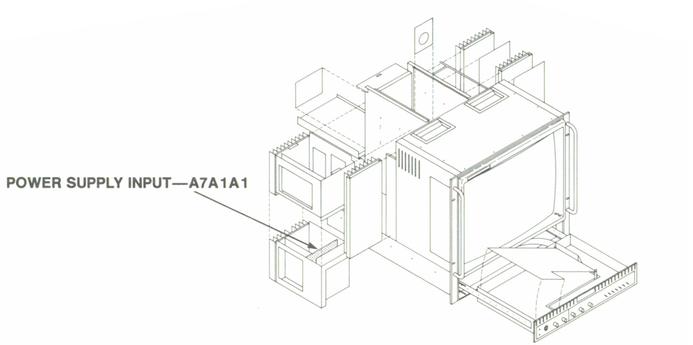

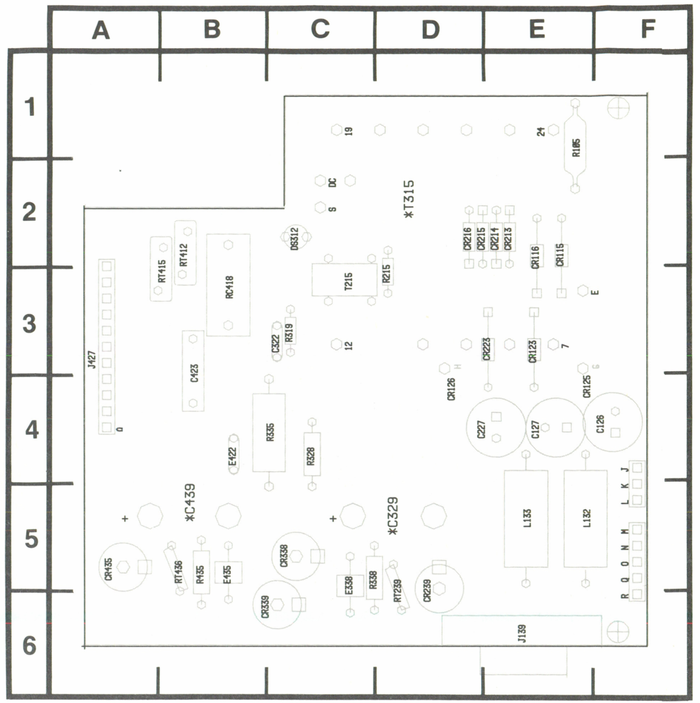

Fig. 12-16. A7A1A1 Power Supply Input board (see 16 and the back of 15.)

Static Sensitive Devices
See Maintenance Section

COMPONENT NUMBER EXAMPLE

Chassis-mounted components have no Assembly Number prefix—see end of Replaceable Electrical Parts List.

RASTER AND VIDEO DRAWER CONTROLS DIAGRAM 13

ASSEMBLY A8A1 *Partial A8A1 also shown on diagram 12.*

CIRCUIT NUMBER	SCHEM LOCATION	BOARD LOCATION	CIRCUIT NUMBER	SCHEM LOCATION	BOARD LOCATION	CIRCUIT NUMBER	SCHEM LOCATION	BOARD LOCATION
C315	B1	C4	R628	A3	E6	R920	B2	D9
C316	B1	C4	R630	A3	E6	R922	B3	D9
C410	B1	B4	R633	A3	F6	R925	B3	E9
C514	B1	C5	R635	B4	F6	R926	B3	E9
C535	B3	F5	R636	B3	F6	R928	B3	E9
C638	B3	G6	R637	B3	F6			
C644	C4	G6	R700	H3	A7	S602	G1	A6
C728	B3	E7	R701	G3	B7	S606	G1	B6
C818	C3	C8	R704	H4	B7	S612	G1	C6
C828	C3	E8	R706	G4	B7	S720	G3	D7
C918	C3	C8	R710	H4	B7	S726	A5	D7
			R711	G4	C7			
DS718	G3	C7	R718	H2	C7	TP117	G4	C1
			R800	H4	A8	TP145	G4	H1
J270	A3	M3	R801	G4	B8	TP473	A2	M4
J270	C1	M3	R804	H5	B8	TP474	A2	M4
J270	C4	M3	R805	G5	B8	TP630	A3	E6
J270	G2	M3	R810	H5	B8	TP633	G4	F6
J470	A1	M5	R811	G5	C8	TP635	A3	F6
J470	A4	M5	R818	B2	C8	TP640	C4	G6
J470	C4	M5	R820	B3	D8	TP641	C3	G5
J470	C5	M5	R823	B3	D8	TP675	C4	M6
J470	H1	M5	R824	B4	D8	TP818	C3	C8
J470	H3	M5	R825	B4	E8	TP904	G4	A9
J827	A4	E8	R827	B4	E8	TP922	C2	D8
			R904	G2	B9	TP926	C3	E8
R472	A1	M4	R905	G2	B9			
R474	A1	M4	R910	G3	B9	U400	B1	B4
R535	B3	F5	R911	G3	C8	U410	B1	C5
R627	B3	E6	R915	B2	C8	U539	B3	G5

CONVERGENCE CONTROL MATRIX DIAGRAM 13

ASSEMBLY A8A2 *Partial A8A2 also shown on diagrams 10 and 11.*

C495	D1	M5	R498	D2	M4	TP162	D2	H1
C496	D1	M5	R594	D1	L6	TP350	D2	F4
C581	E2	J6	R595	D1	M6	TP397	D2	M4
C582	E1	J6	R596	D1	M6	TP522	D2	C6
C590	D2	K6	R821	E1	C8	TP592	D2	L6
C591	D1	K6	R822	E1	C8	TP593	E1	L6
			R825	D2	C9	TP594	E2	L6
J271	D1	M2	R828	E2	C8	TP650	D2	F7
J271	E2	M2	R829	E3	C9	TP693	D1	K6
J271	E3	M2	R830	E3	D9	TP929	E3	C9
J814	E1	B9	R833	D3	E9			
J913	E2	B9				U590	D1	K6
J949	E2	E9	S825	D3	C9	U593	D2	L6
			S833	D3	D9	U595	D1	L6
R496	D1	M5						
R497	D1	L4						

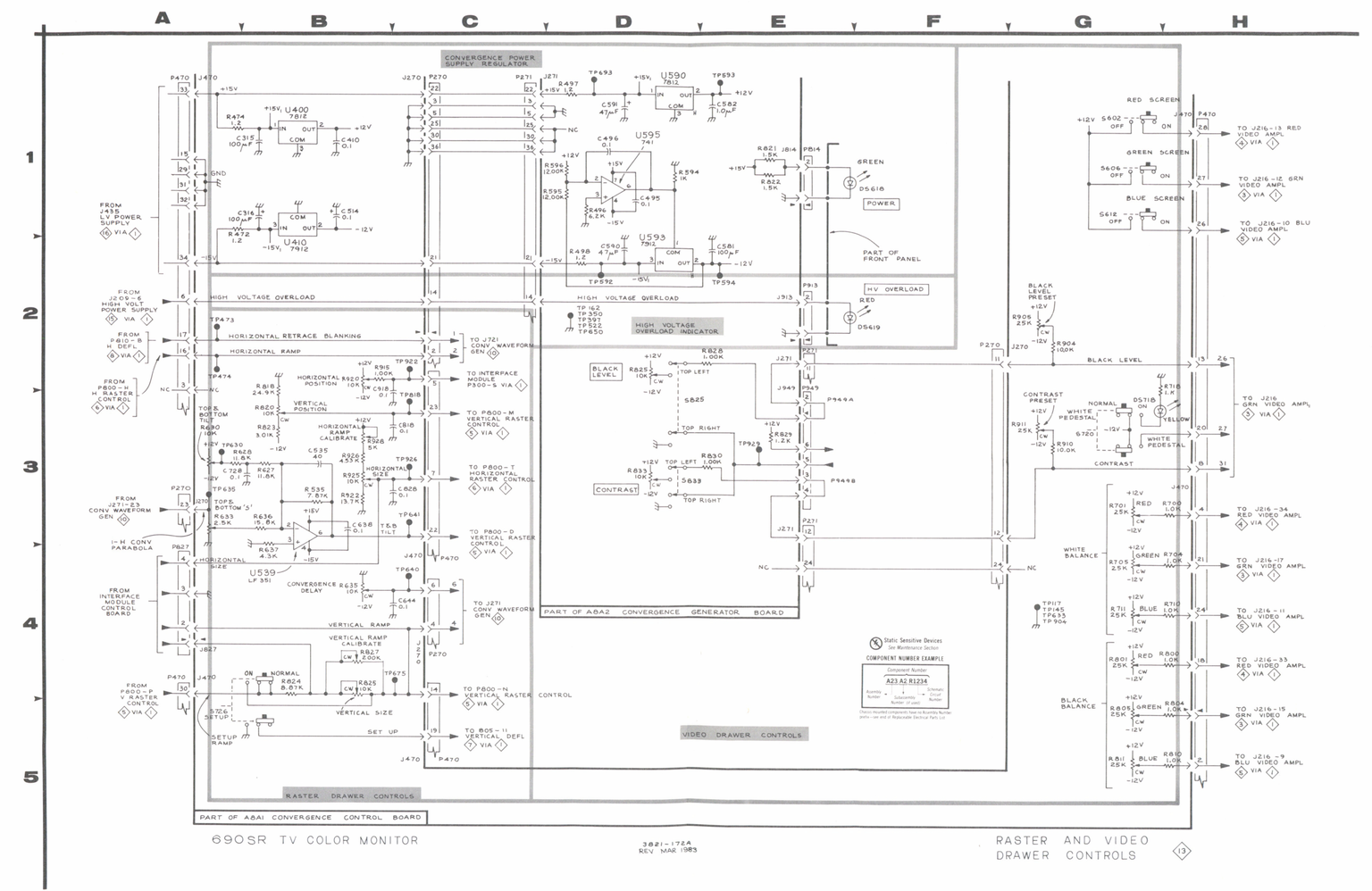

690SR TV COLOR MONITOR

3821-172A
REV MAR 1983

RASTER AND VIDEO DRAWER CONTROLS (13)

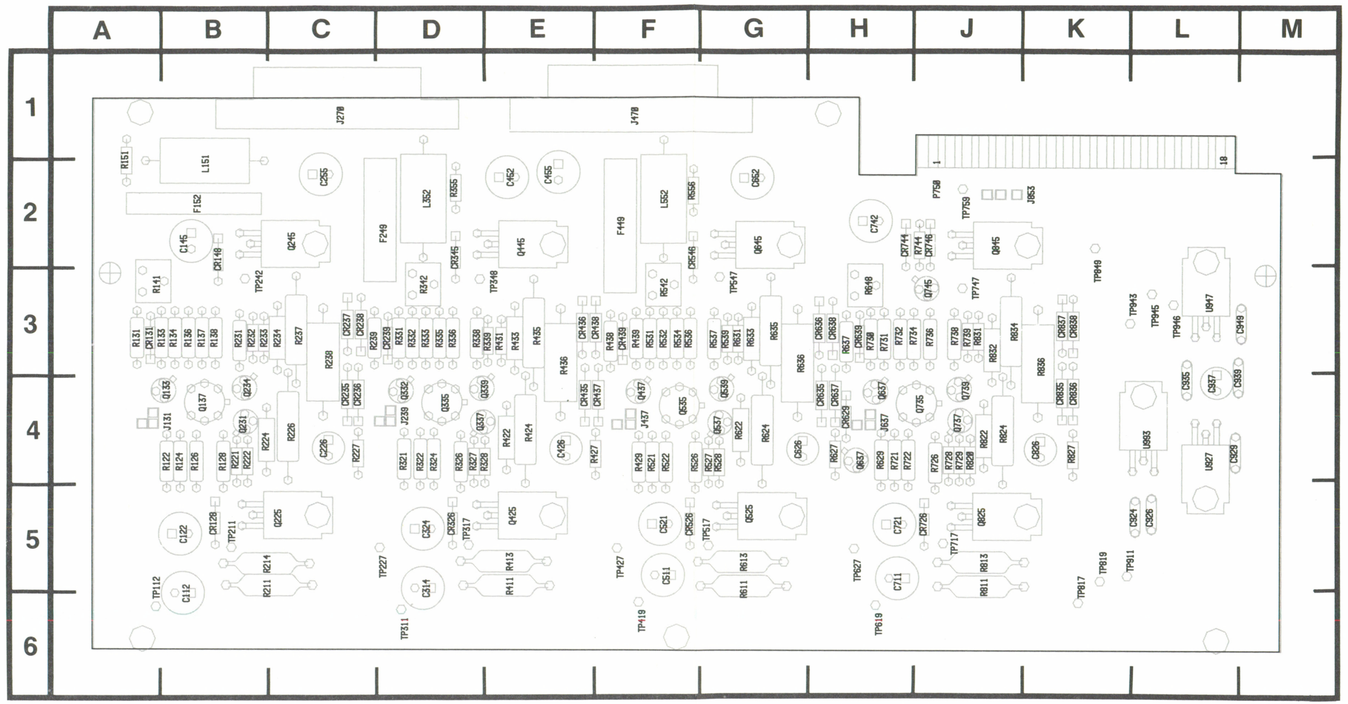

Fig. 12-17. A14A1 Convergence Output board.

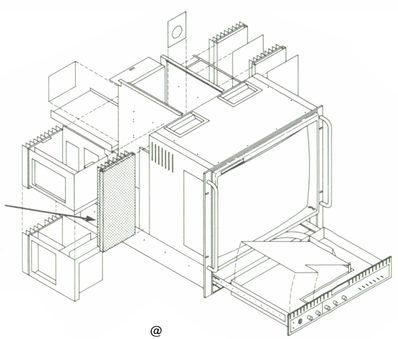

Static Sensitive Devices
See Maintenance Section

COMPONENT NUMBER EXAMPLE

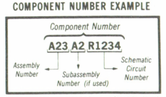

Chassis-mounted components have no Assembly Number prefix—see end of Replaceable Electrical Parts List.

CONVERGENCE OUTPUT AMPLIFIERS DIAGRAM 14

ASSEMBLY A14A1

CIRCUIT NUMBER	SCHEM LOCATION	BOARD LOCATION
C112	B1	B5
C122	B2	B5
C145	C3	B2
C226	B2	C3
C255	C3	C2
C314	B3	D5
C324	B5	D5
C426	B4	E4
C452	D3	E2
C455	D3	E2
C511	E3	F5
C521	E5	F5
C626	E4	G4
C652	D3	G2
C711	E1	H5
C721	E2	H5
C742	D3	H2
C826	E2	K4
C924	G3	L5
C926	G2	L5
C929	H2	L4
C935	G5	L4
C937	G5	L4
C939	H3	L4
C949	H5	L3
CR128	B2	B5
CR131	B1	A3
CR148	C2	B2
CR235	B2	C3
CR236	B2	C3
CR237	B2	C3
CR238	B2	C3
CR239	B3	D3
CR326	B5	D5
CR345	C5	D2
CR435	B4	E4
CR436	B4	E2
CR437	B4	F4
CR438	B4	E2
CR439	E3	F3
CR526	E5	F5
CR546	F5	F2
CR629	E2	H4
CR635	E4	H4
CR636	E4	H5
CR637	E4	H4
CR638	E4	H5
CR639	E1	H5
CR726	E2	J5
CR744	F2	H2
CR746	F2	J2
CR835	E2	K4
CR836	E2	K4
CR837	E2	K3
CR838	E2	K3
F152	C3	B2
F249	D3	D2
F449	D3	F2
J131	B1	B4
J239	B3	D4
J270	G1	C1
J270	G5	C1
J437	F3	F4
J470	G3	F1
J637	F1	H4
J853	H5	K2
L151	C3	B2
L352	D3	D2
L552	D3	F2
P750	A2	J2
P750	A5	J2
P750	H2	J2
P750	H5	J2
Q133	B1	B4
Q137	A2	B4
Q137	C2	B4
Q225	B2	C5
Q231	A2	B4
Q234	C2	B4
Q245	B2	C2
Q332	B3	D4
Q335	A4	D4
Q335	C4	D4
Q337	A5	D4
Q337	E5	G4
Q339	F5	G4
Q339	C5	D4
Q425	B4	E5
Q437	E3	F4
Q445	B4	E2
Q525	E4	G5
Q535	D4	F4
Q535	F4	F4
Q537	E5	G4
Q539	F5	G4
Q627	E2	H4
Q637	E1	H4
Q645	F4	G2
Q735	D2	J4
Q735	F2	J4
Q737	E2	J4
Q739	F2	J4
Q745	F2	J3
Q825	E2	J5
Q845	F2	J2
R122	A2	B4
R124	A2	B4
R126	B3	B4
R128	A2	B4
R131	B1	A3
R133	B1	A3
R134	B1	B3
R136	C2	B3
R137	C2	B3
R138	C3	B3
R141	C3	A3
R151	C3	A2
R211	B1	B5
R214	B3	B5
R221	A2	B4
R222	B2	B4
R224	A2	B4
R226	B3	C3
R227	B2	C3
R231	C2	B3
R232	C2	B3
R233	C2	B3
R234	C2	C3
R237	B3	C3
R238	B2	C3
R239	B3	C3
R321	A4	D4
R322	A4	D4
R324	B5	D4
R326	A5	D4
R327	A4	D4
R328	B4	D4
R331	B3	D3
R332	B3	D3
R333	C4	D3
R335	C5	D3
R336	C5	D3
R338	C5	D3
R339	C4	E2
R342	B4	D3
R355	D3	D2
R411	B3	E5
R413	B5	E5
R422	A5	E4
R424	B5	E4
R427	B4	E4
R429	D4	F4
R431	C4	E2
R433	C5	E2
R435	B5	E2
R436	C4	E2
R438	E3	F3
R439	E3	F3
R521	D4	F4
R522	E5	F4
R526	D5	F4
R527	E4	G4
R528	E4	G4
R531	E3	F3
R532	G4	F3
R534	G5	F3
R536	F5	F3
R537	F5	G3
R539	F4	G3
R542	E4	F3
R556	D3	F2
R611	E3	G5
R613	E5	G5
R622	E5	G4
R624	E5	G4
R627	E4	H4
R629	D2	H4
R631	F4	G3
R633	F5	G3
R635	F5	G3
R636	F4	G3
R637	E1	H5
R648	E1	H5
R721	D2	H4
R722	E3	H4
R726	D2	J4
R728	E1	J4
R729	E2	J4
R730	E1	H5
R731	E1	H5
R732	G2	H5
R734	G2	H5
R736	F3	J3
R738	F2	J3
R739	F1	J3
R744	F2	J2
R811	E1	J5
R813	E3	J5
R820	E2	J4
R822	E2	J4
R824	E3	J4
R827	E2	K4
R831	F2	J3
R832	F2	J3
R834	F3	J3
R836	F2	K3
TP112	A2	A5
TP211	B2	B5
TP227	B2	D5
TP242	C2	B3
TP311	A5	D6
TP317	B5	D5
TP348	C5	E2
TP419	D5	F6
TP427	B4	F5
TP517	E5	G5
TP547	F5	G3
TP619	D2	H6
TP627	E4	H5
TP717	E2	J5
TP747	F2	J3
TP759	H5	J2
TP817	G3	K5
TP819	D2	K5
TP849	H2	K3
TP911	E2	K5
TP943	G5	K3
TP945	H5	L3
TP946	H3	L3
U927	H2	L4
U933	H3	L4
U947	H5	L3

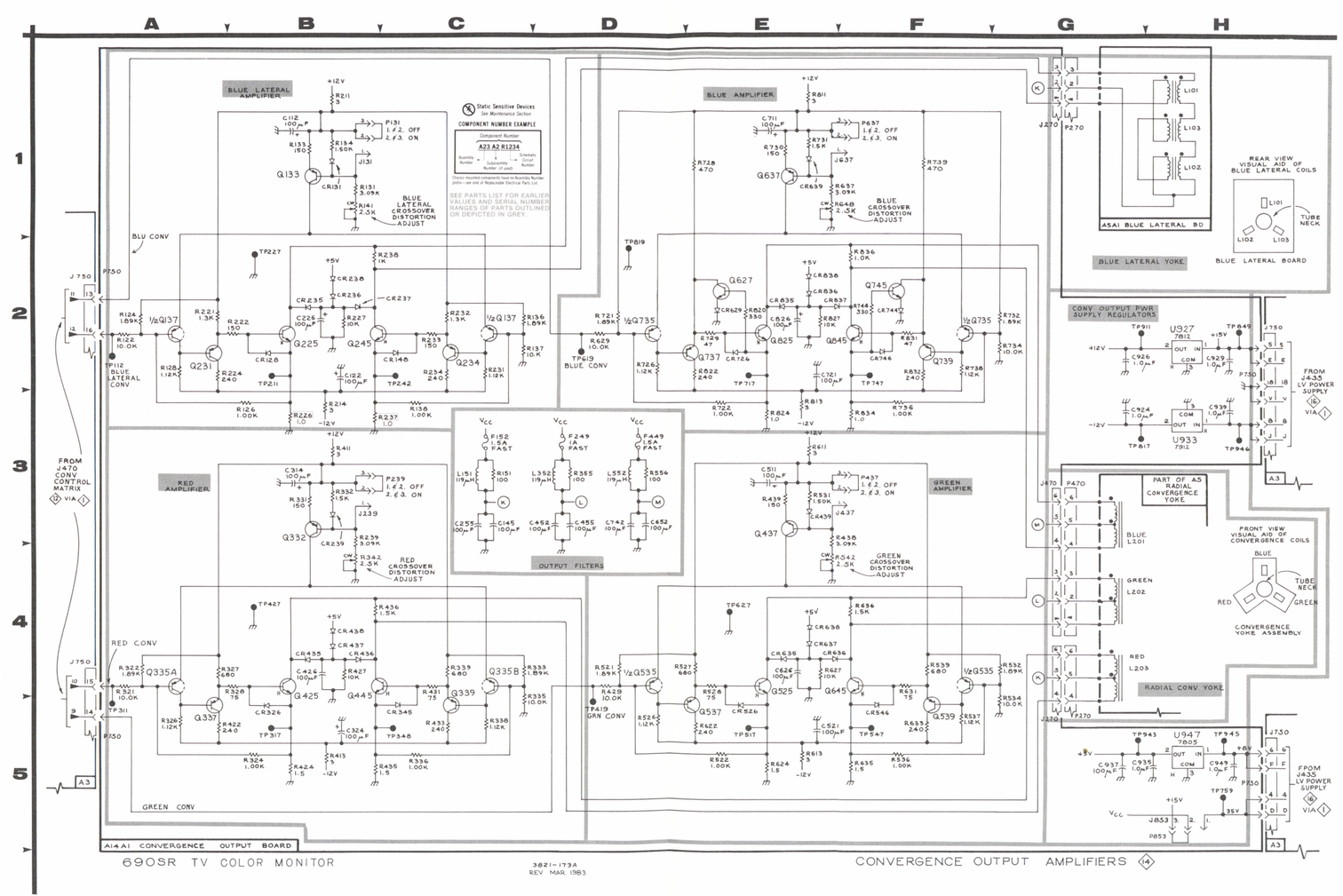
A
B
C
D
E
F
G
H
1
2
3
4
5
BLUE LATERAL AMPLIFIER
BLUE AMPLIFIER
RED AMPLIFIER
GREEN AMPLIFIER
OUTPUT FILTERS
BLUE LATERAL CROSSOVER DISTORTION ADJUST
BLUE CROSSOVER DISTORTION ADJUST
RED CROSSOVER DISTORTION ADJUST
GREEN CROSSOVER DISTORTION ADJUST
Static Sensitive Devices
See Maintenance Section
COMPONENT NUMBER EXAMPLE
SEE PARTS LIST FOR EARLIER VALUES AND SERIAL NUMBER RANGES OF PARTS OUTLINED OR DEPICTED IN GREY
BLU CONV
RED CONV
GREEN CONV
FROM J470 CONV CONTROL MATRIX
A5A1 BLUE LATERAL BD
BLUE LATERAL YOKE
REAR VIEW VISUAL AID OF BLUE LATERAL COILS
BLUE LATERAL BOARD
TUBE NECK
CONV OUTPUT PWR SUPPLY REGULATORS
FROM J435 LV POWER SUPPLY
PART OF A5 RADIAL CONVERGENCE YOKE
FRONT VIEW VISUAL AID OF CONVERGENCE COILS
CONVERGENCE YOKE ASSEMBLY
RADIAL CONV YOKE
A14A1 CONVERGENCE OUTPUT BOARD
690SR TV COLOR MONITOR
3821-173A
REV MAR 1983
CONVERGENCE OUTPUT AMPLIFIERS

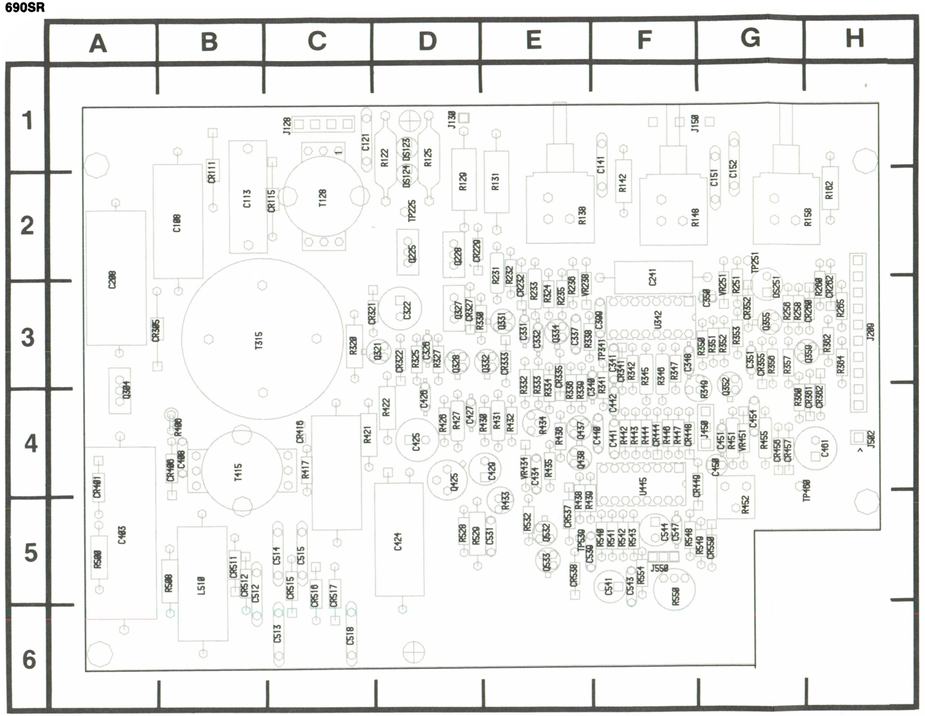

Fig. 12-18. A7A2A1 HV Regulator board.

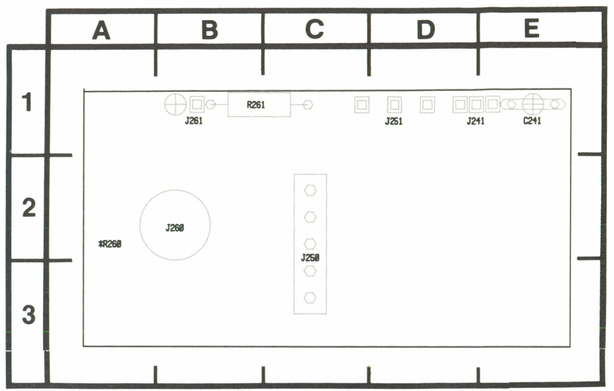

* COMPENT MOUNTED TO SHIELD

Fig. 12-19. A7A2A2 Focus board.

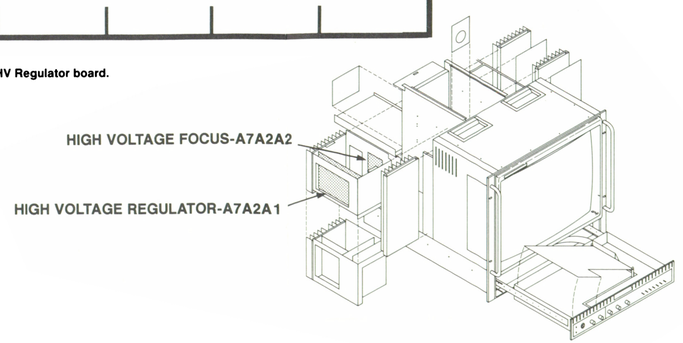

Static Sensitive Devices
See Maintenance Section

COMPONENT NUMBER EXAMPLE

Chassis-mounted components have no Assembly Number prefix—see end of Replaceable Electrical Parts List

HIGH VOLTAGE POWER SUPPLY DIAGRAM 15

ASSEMBLY A7A2A1

CIRCUIT NUMBER	SCHEM LOCATION	BOARD LOCATION
C108	F3	B2
C113	F3	B2
C121	A2	C1
C141	G1	F1
C151	G1	G2
C152	H1	G2
C208	F3	A2
C241	F2	F2
C322	E4	D3
C326	E4	D3
C331	B1	E3
C332	B2	E3
C337	D4	E3
C340	C5	F3
C341	B4	F3
C348	D1	F3
C350	B4	G3
C351	B2	G3
C399	B4	E4
C403	F1	A5
C408	E2	B4
C424	E1	D5
C425	A1	D4
C426	D4	D4
C427	G3	D4
C429	D1	E4
C434	B1	E4
C440	C3	F4
C441	D3	F4
C442	B5	F4
C450	A2	G4
C451	A2	G4
C454	A4	G4
C461	A1	H4
C512	F1	B5
C513	F1	C6
C514	F1	C5
C515	F1	C5
C518	F1	C6
C531	E2	E5
C539	C2	E5
C541	C1	F5
C543	D2	F5
C544	C2	F5
C547	B3	F5
CR111	F3	B2
CR115	E4	C2
CR229	G2	D2
CR232	B1	E3
CR260	B2	H3
CR262	A2	H3
CR305	F2	A2
CR321	E4	C3
CR322	E4	D3
CR327	G2	D3
CR333	F3	E3
CR335	B4	E3
CR341	C4	F3
CR352	B2	G3
CR355	B2	G3
CR361	B3	H4
CR362	B3	H4
CR401	E1	A4
CR406	E1	B4
CR416	E1	C4
CR444	D3	F4
CR448	A2	F4
CR449	B3	G4
CR456	C2	G4
CR457	B2	G4
CR511	F1	B5
CR512	F1	B5
CR515	F1	C5
CR516	F1	C5
CR517	F1	C5
CR537	D2	E5
CR538	C1	E5
CR550	C1	G5
DS123	A2	D1
DS124	A2	D1
DS251	B2	G3
J128	E5	C1
J130	H2	D1
J209	A2	H3
J450	A2	G4
J502	A1	H4
J502	D1	H4
J550	C2	F5
L510	F1	B5
Q225	E4	D2
Q228	G2	D2
Q304	F1	A4
Q321	E4	D3
Q327	G2	D3
Q328	F2	D3
Q331	F3	E3
Q332	G2	E3
Q334	D4	E3
Q352	C4	G4
Q355	B2	G3
Q359	B2	H3
Q425	E2	D4
Q437	D4	E4
Q438	C3	E4
Q532	C1	E5
Q533	C1	E5
R122	E5	D1
R125	E5	D1
R129	H2	D2
R131	G2	E2
R138	G1	E2
R142	G1	F2
R148	G1	G2
R158	H1	H2
R162	G2	H2
R231	G2	E2
R232	F2	E2
R233	B1	E3
R234	D4	E3
R235	D4	E3
R236	B4	E3
R251	A4	D2
R256	B2	G3
R258	B2	G3
R265	F3	H3
R320	E3	C3
R325	E4	D3
R327	D4	D3
R330	F3	D3
R332	B1	E4
R333	B1	E4
R334	D4	E4
R336	C4	E4
R338	C4	E3
R339	D5	E4
R341	B5	F3
R342	C5	F3
R345	B4	F3
R346	B4	F3
R347	B4	F3
R349	C2	G4
R350	C4	G3
R351	C4	G3
R352	C4	G3
R353	B2	G3
R356	B2	G3
R357	B2	G3
R360	B2	G4
R362	B3	H3
R364	B3	H3
R406	F1	B4
R417	E1	C4
R421	E1	C4
R422	A1	D4
R426	F2	D4
R427	G2	D4
R430	G3	E4
R431	G2	E4
R432	G3	E4
R433	B1	E5
R434	B1	E4
R435	A4	E4
R436	A4	E4
R438	C3	E5
R439	C3	E5
R442	D3	F4
R443	B1	F4
R444	C2	F4
R446	B3	F4
R447	A2	F4
R451	A4	G4
R452	A4	G5
R455	A2	G4
R500	E1	A5
R508	F1	B5
R528	E2	D5
R529	E2	D5
R532	B1	E5
R540	C2	F5
R541	C2	F5
R542	D2	F5
R543	D2	F5
R548	D1	F5
R549	C1	G5
R550	C2	F5
R554	C2	F5
T128	E4	C2
T315	F2	B3
T415	E2	B4
TP225	E4	D2
TP251	A4	G2
TP341	B4	F3
TP460	B2	H4
TP539	D2	E5
U342	C5	F3
U445	D3	F4
VR238	B4	E3
VR251	A4	G3
VR434	B1	E4
VR451	A4	G4

CHASSIS MOUNTED PARTS

E104	H2	CHASSIS
E105	H2	CHASSIS
E109	H4	CHASSIS
E113	H2	CHASSIS
J100	F4	CHASSIS
J101	F4	CHASSIS
Q100	F4	CHASSIS
R100	F5	CHASSIS
T100	F4	CHASSIS

ASSEMBLY A7A2A2

C241	G5	E1
C254	G4	*
C255	H4	*
C256	H4	*
C257	G4	*
C258	G4	*
J241	G5	D1
J250	H1	C2
J251	H1	D1
J260	H4	B3
J261	H2	B1
R254A	G4	*
R254B	H4	*
R254C	H4	*
R254D	H4	*
R254E	H5	*
R254F	G4	*
R254G	G4	*
R254H	G4	*
R255	G5	*
R257	H1	D2
R258	H1	D2
R259	H1	D3
R260	H4	A2
R261	H3	B1
W254	H5	*

* ENCAPSULATED

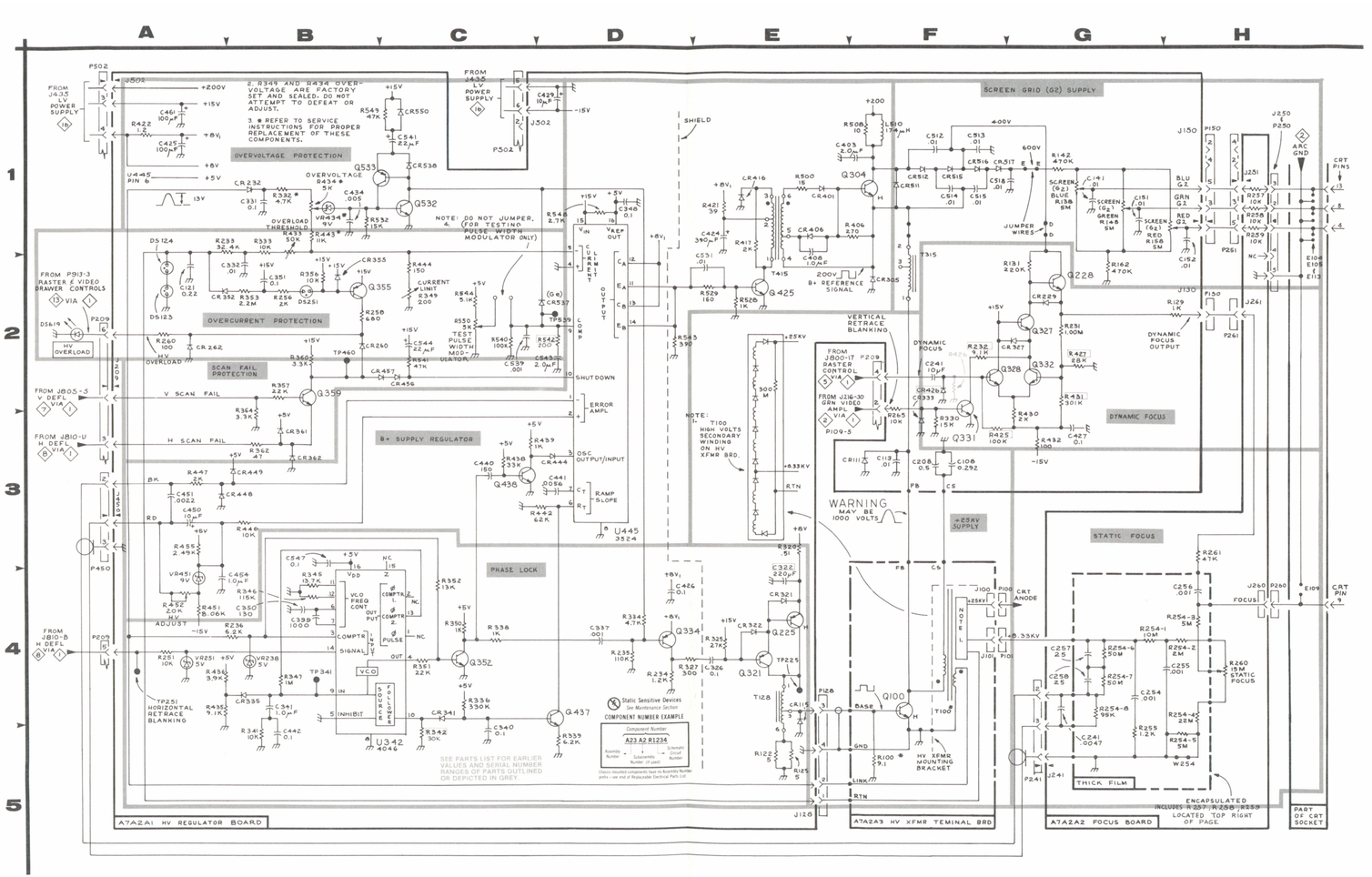

690SR TV COLOR MONITOR

3821-174A
REV MAR. 1983

HIGH VOLTAGE POWER SUPPLY (15)

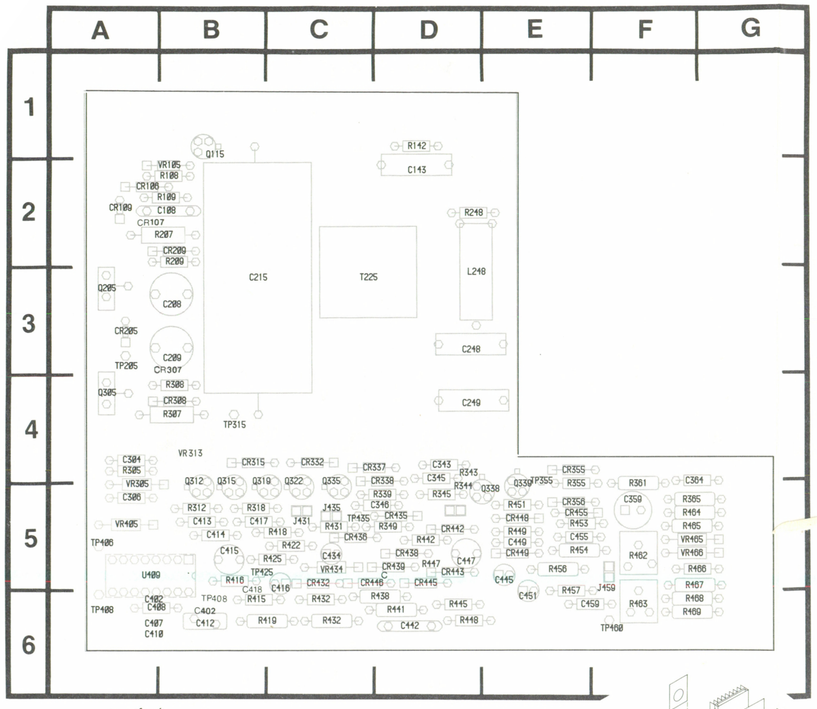

Cardcart 100% Black

Fig. 12-20. A7A1A2 Power Supply Inverter board.

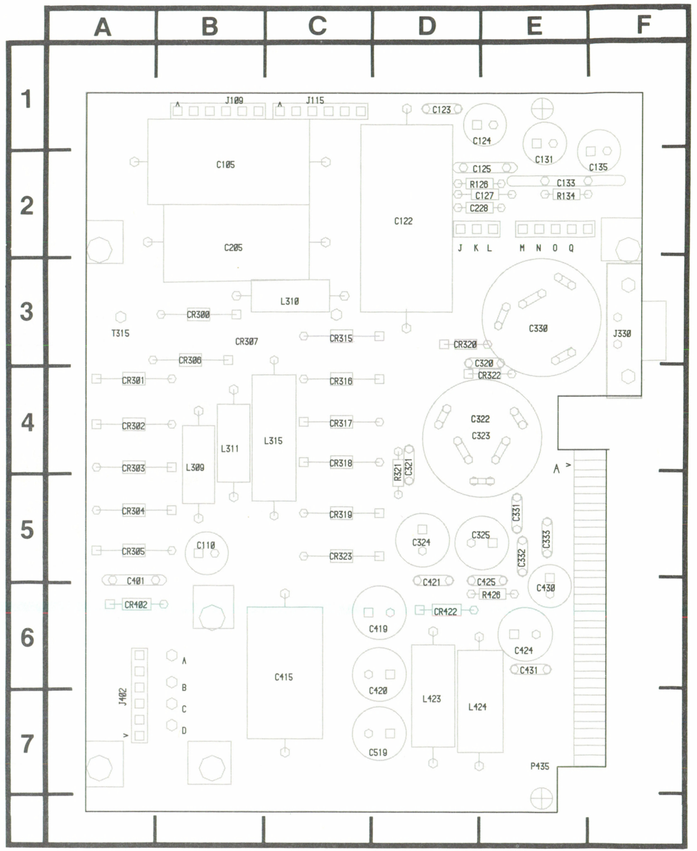

Cardcart 100% Black

Fig. 12-21. A7A1A3 Power Supply Output board.

Static Sensitive Devices
See Maintenance Section

COMPONENT NUMBER EXAMPLE

Chassis-mounted components have no Assembly Number prefix—see end of Replaceable Electrical Parts List.

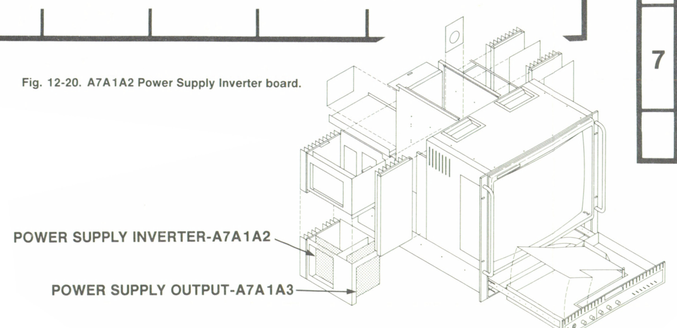

LOW VOLTAGE POWER SUPPLY DIAGRAM 16

ASSEMBLY A7A1A1

CIRCUIT NUMBER	SCHEM LOCATION	BOARD LOCATION
C126	G5	F4
C127	G5	E4
C227	G5	E4
C322	C1	C3
C329	C1	D5
C423	B2	B3
C439	C1	B5
CR115	G4	E2
CR116	G4	E2
CR123	G5	E3
CR125	G5	E3
CR126	G5	D4
CR213	G4	E2
CR214	G4	E2
CR215	G4	E2
CR216	G4	D2
CR223	G5	E3
CR239	C1	D5
CR338	C1	C5
CR339	C1	C6
CR435	C1	A5
DS312	C1	C2
E338	B1	C5
E422	B2	B4
E435	B2	B5
J139	B2	E6
J427	B2	A3
L132	H4	E5
L133	H4	E5
R105	G4	E1
R215	D1	D3
R319	C1	C3
R328	D3	C4
R335	D1	C4
R338	B1	D5
R435	B2	B5
RC418	B1	B3
RT239	B1	D5
RT412	B2	B2
RT415	B3	B3
RT436	B2	B5
T215	D2	C3
T315	G1	D2

ASSEMBLY A7A1A2

CIRCUIT NUMBER	SCHEM LOCATION	BOARD LOCATION
C108	F3	B1
C143	E2	D2
C208	F2	B1
C209	F2	B1
C215	E1	B1
C248	E3	D3
C249	E3	D4
C304	E4	A4
C306	D5	A5
C343	C4	D4
C345	C4	D4
C346	D4	D5
C359	A5	F5
C364	A5	F5
C402	C5	A6
C407	C4	A6
C408	C5	A6
C410	C5	B6
C412	D6	B6
C413	E4	B5
C414	A4	B5
C415	D5	B5
C415	D5	B5
C416	A4	C5
C417	F5	B5
C418*	B4	B5
C434	A4	C5
C442	C5	D6
C445	E5	E5
C447	D4	D5
C449	E5	E5
C451	C5	E6
C455	F5	E5
C459	C6	E6
CR106	F2	A2
CR107*	F2	A2
CR109	F2	A2
CR205	F2	A3
CR209	F2	B1
CR307*	F2	A3
CR308	F2	B4
CR315	E4	B4
CR332	C4	C4
CR337	E4	C4
CR338	E4	D4
CR355	B5	E4
CR356	F5	E5
CR432	B5	C5
CR435	D4	D5
CR436	A4	C5
CR438	A4	D5
CR439	A4	D5
CR442	A4	D5
CR443	E5	D5
CR445	B5	D5
CR446	B5	D5
CR448	E6	E5
CR449	E5	E5
CR455	F5	E5
J431	D5	C5
J435	D5	C5
J459	B5	F5
L248	E1	D3
Q115	F4	B1
Q205	F2	A3
Q305	F2	A4
Q312	E4	B4
Q315	E4	B4
Q319	F5	B4
Q322	D5	C4
Q335	D4	C4
Q338	E5	E5
Q339	E6	E5
R108	F4	B1
R109	F3	B1
R142	E2	D1
R207	F2	B1
R209	F2	B1
R248	E1	D2
R305	E4	A4
R307	F2	B4
R308	F2	B4
R312	E4	B5
R318	E4	B5
R339	C4	D5
R343	C4	D4
R344	C4	D4
R345	E5	D5
R355	B5	E5
R361	B5	F5
R365	B5	F5
R415	A4	B6
R416	D5	B5
R418	A4	C5
R419	D5	B6
R422	C4	C5
R425	E5	B5
R431	D4	C5
R432	C4	C6
R433	B4	C6
R438	B5	D6
R439	D4	D5
R441	B5	D6
R442	E5	D5
R445	E5	D6
R447	E5	D5
R448	C5	D6
R449	E6	E5
R451	F5	E5
R453	F5	E5
R454	E6	E5
R456	E5	E5
R457	C6	E5
R462	B6	F6
R463	B6	F6
R464	B5	F5
R465	B5	F5
R466	B6	F5
R467	C5	F5
R468	B5	F6
R469	B6	F6
T225A	E2	D3
T225B	F3	D3
TP205	F2	A3
TP315	F3	B4
TP355	F5	E4
TP406	C6	A5
TP408	C4	B6
TP425	D5	B5
TP435	C4	C5
TP460	C5	F6
U409	C5	A5
VR105	F4	B1
VR305	D5	A4
VR313	E4	B4
VR405	E4	A5
VR434	A4	C5
VR465	B5	F5
VR466	B5	F5

CHASSIS MOUNTED PARTS

B116	H1	CHASSIS
E250	F2	CHASSIS
F100	D1	CHASSIS
F101	A1	CHASSIS
FL101	A2	CHASSIS
L139	C2	CHASSIS
S100	A1	CHASSIS
S101	A3	CHASSIS
V100	C2	CHASSIS

ASSEMBLY A7A1A3

CIRCUIT NUMBER	SCHEM LOCATION	BOARD LOCATION
C105	G2	B2
C110	G1	B5
C122	H2	D2
C123	H2	D1
C124	G4	D1
C125	H4	D2
C127	H4	D2
C131	G4	E2
C133	H5	E2
C135	H5	F2
C205	G2	B2
C228	H4	D2
C320	H3	E3
C321	H2	D4
C322	H2	E4
C323	H2	D5
C324	H5	D5
C325	H5	E5
C330	H3	E3
C331	H2	E5
C332	H5	E5
C333	H5	E5
C401	H2	A5
C415	G3	C6
C419	H3	D6
C420	G3	D7
C421	H3	D6
C424	H3	E6
C425	H2	E6
C430	G2	E6
C431	H3	E6
C519	G3	D7
CR300	G2	B3
CR301	G2	A4
CR302	G2	A4
CR303	G2	A4
CR304	G2	A5
CR305	G2	A5
CR306	G2	B3
CR307	G2	B3
CR315	G3	C3
CR316	G3	C4
CR317	G3	C4
CR318	G3	C4
CR319	G3	C5
CR320	H2	D3
CR322	H3	E4
CR323	G3	C5
CR402	G2	A6
CR422	G1	D6
J109	H1	B1
J115	H1	C1
J330	H5	F3
J402	H5	A7
L309	G2	B4
L310	G2	C3
L311	G2	B4
L315	G3	C4
L423	H3	D7
L424	H3	D7
P435	G1	E7
P435	H1	E7
R126	H4	D2
R134	H5	E2
R321	H2	D5
R426	H2	E6
T315	G2	A3

*See Parts List for serial number ranges.

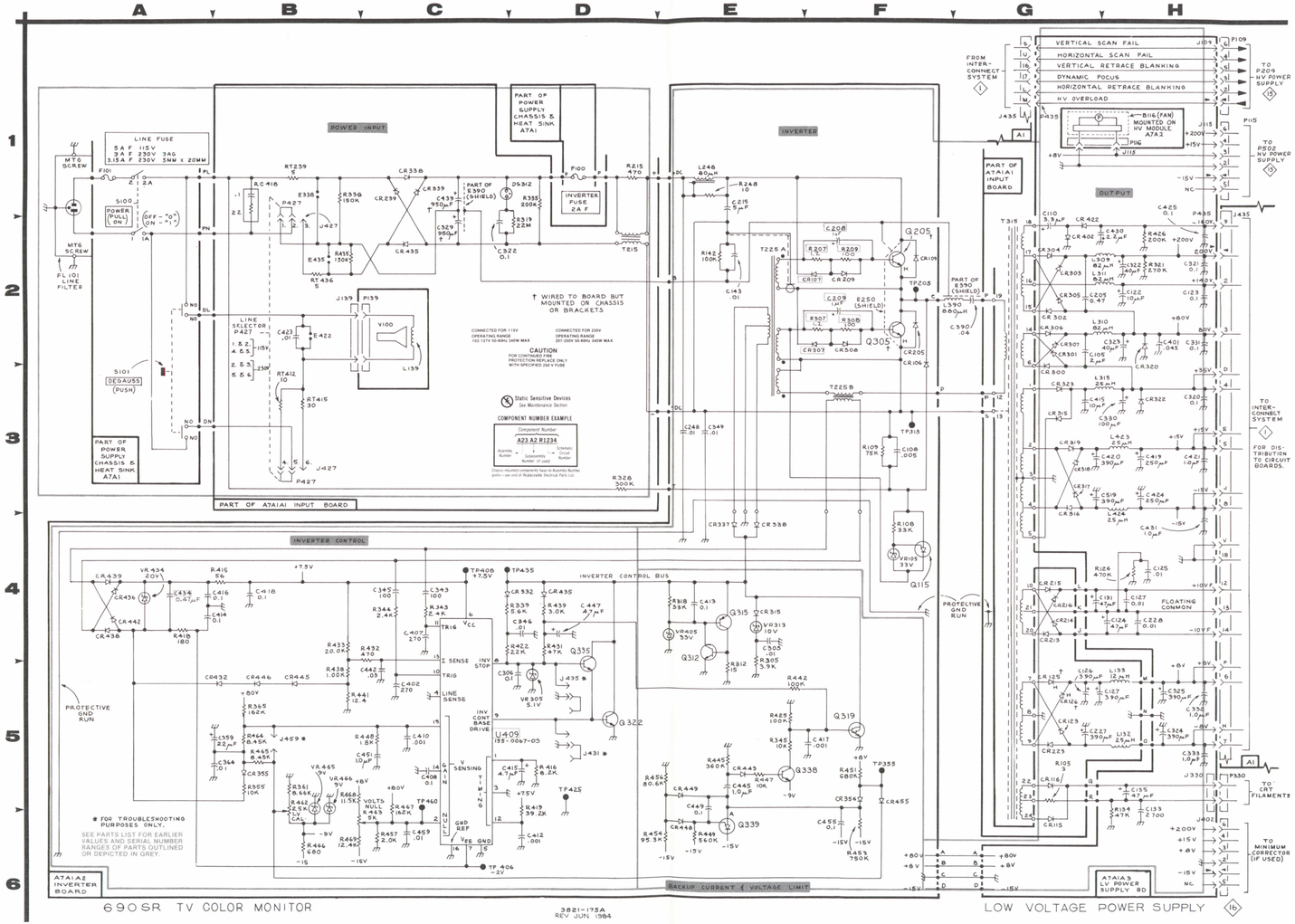
A B C D E F G H
1 2 3 4 5 6
POWER INPUT
PART OF POWER SUPPLY CHASSIS & HEAT SINK A7A1
LINE FUSE 5A F 115V 3A F 230V 3AG 1.15A F 230V 5MM x 20MM
F101 2.2A
S100 POWER (PULL ON) OFF - "0" ON - "1"
MT6 SCREW
MT6 SCREW
FL101 LINE FILTER
LINE SELECTOR P427
S101 DEGAUSS (PUSH)
RT239
RT436 5
RT412 10
RT415 30
RT328 300K
RC416
CR338
CR439
CR435
CR329 950µF
D5312
R335 200K
R319 22M
C322 0.1
F100 INVERTER FUSE 2A F
R215 470
T215
PART OF E390 (SHIELD)
J139 P139
V100
L139
C423 .01
E422
J427 P427
PART OF A7A1A1 INPUT BOARD
† WIRED TO BOARD BUT MOUNTED ON CHASSIS OR BRACKETS
CONNECTED FOR 115V OPERATING RANGE 103-127V 50-60Hz 340W MAX
CONNECTED FOR 230V OPERATING RANGE 207-253V 50-60Hz 340W MAX
CAUTION FOR CONTINUED FIRE PROTECTION REPLACE ONLY WITH SPECIFIED 250 V FUSE
Static Sensitive Devices See Maintenance Section
COMPONENT NUMBER EXAMPLE
Component Number A23 A2 R1234
Assembly Number · Subassembly Number (if used) · Schematic Circuit Number
Chassis mounted components have no Assembly Number prefix—use unit of Replaceable Electrical Parts List
INVERTER
L248 80µH
R248 10
C215 .5µF
R142 100K
C143 .01
T225A
T225B
C208 .1µF
R207 100
R209 100
CR107
CR209
Q205
CR109
TP205
C209 .1µF
E250 (SHIELD)
R307 100
R308 100
CR307
CR308
Q305
CR205
CR106
TP315
C108 .005
C248 .01
C349 .01
R109 75K
R108 33K
VR105 33V
Q115
CR337
CR338
PART OF E390 (SHIELD)
C390 .04
C390 880µH
PART OF A7A1A1 INPUT BOARD
FROM INTER-CONNECT SYSTEM 1
VERTICAL SCAN FAIL
HORIZONTAL SCAN FAIL
VERTICAL RETRACE BLANKING
DYNAMIC FOCUS
HORIZONTAL RETRACE BLANKING
HV OVERLOAD
J109 P109
TO P209 HV POWER SUPPLY 15
J435 P435
B116 (FAN) MOUNTED ON HV MODULE A7A2
J115 P115
TO P502 HV POWER SUPPLY 13
+8V
OUTPUT
-15V
NC
C425 0.1
P435 J435
-140V
+200V
+140V
+80V
+35V
+15V
-15V
-10VF
+10VF
+8V
-8V
FLOATING COMMON
TO INTER-CONNECT SYSTEM 1
FOR DIS-TRIBUTION TO CIRCUIT BOARDS.
TO CRT FILAMENTS
TO MINIMUM CORRECTOR (IF USED)
INVERTER CONTROL
+7.5V
TP408 +7.5V
TP435
INVERTER CONTROL BUS
VR434 20V
CR439
CR434
CR442
CR438
R416 180
C434 0.47µF
C416 .01
C414 .01
C418 .01
R415 56
C345 100
C343 100
R344 2.4K
R343 2.4K
C407 270
R433 20.0K
R432 470
R438 1.00K
C442 .03
C402 270
R441 12.4
C432
CR446
CR445
+80V
R365 162K
R466 8.45K
R445 8.45K
C359 22µF
C364 .01
CR355
R355 10K
R361 8.66K
R462 8.25K
VR465 9V
VR466 9V
R468 11.5K
R469 12.4K
R466 680
R457 2.0K
R467 162K
R463 5K
TP460
C459 .01
C408 .01
R448 1.8K
C451 .01
C410 .001
R459 *
PROTECTIVE GND RUN
* FOR TROUBLESHOOTING PURPOSES ONLY. SEE PARTS LIST FOR EARLIER VALUES AND SERIAL NUMBER RANGES OF PARTS OUTLINED OR DEPICTED IN GREY.
CR332
CR435
R339 5.6K
R439 3.0K
C447 4.7µF
C346 .01
R422 2.2K
R431 47K
Q335
J435 *
VR305 5.1V
Q322
J431 *
U409 155-0067-03
INV CONT BASE DRIVE
INV STOP
I SENSE
TRIG
LINE SENSE
V SENSING
GAIN
NULL
TIMING
GND REF
VFE GND
C415 4.7µF
R416 8.2K
TP425
R419 39.2K
C412 .001
TP406 -2V
R818 33K
C413 .01
Q315
CR315
VR313 10V
C305 .01
R305 3.9K
VR405 33V
Q312
R312 15
R442 100K
R425 100K
Q319
C417 .001
R345 10K
R445 360K
CR443
R447 10K
Q338
R451 680K
TP355
R454 80.6K
CR449
C449 .01
C445 1.0µF
Q339
CR354
CR455
C458 .01
R454 95.3K
CR448
R449 540K
R453 750K
-15V
BACKUP CURRENT & VOLTAGE LIMIT
A7A1A2 INVERTER BOARD
A7A1A3 LV POWER SUPPLY BD
3821-175A REV JUN 1984
690SR TV COLOR MONITOR
LOW VOLTAGE POWER SUPPLY

REPLACEABLE MECHANICAL PARTS

PARTS ORDERING INFORMATION

Replacement parts are available from or through your local Tektronix, Inc. Field Office or representative.

Changes to Tektronix instruments are sometimes made to accommodate improved components as they become available, and to give you the benefit of the latest circuit improvements developed in our engineering department. It is therefore important, when ordering parts, to include the following information in your order: Part number, instrument type or number, serial number, and modification number if applicable.

If a part you have ordered has been replaced with a new or improved part, your local Tektronix, Inc. Field Office or representative will contact you concerning any change in part number.

Change information, if any, is located at the rear of this manual.

SPECIAL NOTES AND SYMBOLS

X000	Part first added at this serial number
00X	Part removed after this serial number

FIGURE AND INDEX NUMBERS

Items in this section are referenced by figure and index numbers to the illustrations.

INDENTATION SYSTEM

This mechanical parts list is indented to indicate item relationships. Following is an example of the indentation system used in the description column.

```
1 2 3 4 5                    Name & Description

Assembly and/or Component
Attaching parts for Assembly and/or Component
- - - * - - -
  Detail Part of Assembly and/or Component
  Attaching parts for Detail Part
  - - - * - - -
    Parts of Detail Part
    Attaching parts for Parts of Detail Part
    - - - * - - -
```

Attaching Parts always appear in the same indentation as the item it mounts, while the detail parts are indented to the right. Indented items are part of, and included with, the next higher indentation. The separation symbol - - - * - - - indicates the end of attaching parts.

Attaching parts must be purchased separately, unless otherwise specified.

ITEM NAME

In the Parts List, an Item Name is separated from the description by a colon (:). Because of space limitations, an Item Name may sometimes appear as incomplete. For further Item Name identification, the U.S. Federal Cataloging Handbook H6-1 can be utilized where possible.

ABBREVIATIONS

	INCH
#	NUMBER SIZE
ACTR	ACTUATOR
ADPTR	ADAPTER
ALIGN	ALIGNMENT
AL	ALUMINUM
ASSEM	ASSEMBLED
ASSY	ASSEMBLY
ATTEN	ATTENUATOR
AWG	AMERICAN WIRE GAGE
BD	BOARD
BRKT	BRACKET
BRS	BRASS
BRZ	BRONZE
BSHG	BUSHING
CAB	CABINET
CAP	CAPACITOR
CER	CERAMIC
CHAS	CHASSIS
CKT	CIRCUIT
COMP	COMPOSITION
CONN	CONNECTOR
COV	COVER
CPLG	COUPLING
CRT	CATHODE RAY TUBE
DEG	DEGREE
DWR	DRAWER
ELCTRN	ELECTRON
ELEC	ELECTRICAL
ELCTLT	ELECTROLYTIC
ELEM	ELEMENT
EPL	ELECTRICAL PARTS LIST
EQPT	EQUIPMENT
EXT	EXTERNAL
FIL	FILLISTER HEAD
FLEX	FLEXIBLE
FLH	FLAT HEAD
FLTR	FILTER
FR	FRAME or FRONT
FSTNR	FASTENER
FT	FOOT
FXD	FIXED
GSKT	GASKET
HDL	HANDLE
HEX	HEXAGON
HEX HD	HEXAGONAL HEAD
HEX SOC	HEXAGONAL SOCKET
HLCPS	HELICAL COMPRESSION
HLEXT	HELICAL EXTENSION
HV	HIGH VOLTAGE
IC	INTEGRATED CIRCUIT
ID	INSIDE DIAMETER
IDENT	IDENTIFICATION
IMPLR	IMPELLER
IN	INCH
INCAND	INCANDESCENT
INSUL	INSULATOR
INTL	INTERNAL
LPHLDR	LAMPHOLDER
MACH	MACHINE
MECH	MECHANICAL
MTG	MOUNTING
NIP	NIPPLE
NON WIRE	NOT WIRE WOUND
OBD	ORDER BY DESCRIPTION
OD	OUTSIDE DIAMETER
OVH	OVAL HEAD
PH BRZ	PHOSPHOR BRONZE
PL	PLAIN or PLATE
PLSTC	PLASTIC
PN	PART NUMBER
PNH	PAN HEAD
PWR	POWER
RCPT	RECEPTACLE
RES	RESISTOR
RGD	RIGID
RLF	RELIEF
RTNR	RETAINER
SCH	SOCKET HEAD
SCOPE	OSCILLOSCOPE
SCR	SCREW
SE	SINGLE END
SECT	SECTION
SEMICOND	SEMICONDUCTOR
SHLD	SHIELD
SHLDR	SHOULDERED
SKT	SOCKET
SL	SLIDE
SLFLKG	SELF-LOCKING
SLVG	SLEEVING
SPR	SPRING
SQ	SQUARE
SST	STAINLESS STEEL
STL	STEEL
SW	SWITCH
T	TUBE
TERM	TERMINAL
THD	THREAD
THK	THICK
TNSN	TENSION
TPG	TAPPING
TRH	TRUSS HEAD
V	VOLTAGE
VAR	VARIABLE
W/	WITH
WSHR	WASHER
XFMR	TRANSFORMER
XSTR	TRANSISTOR

CROSS INDEX—MFR. CODE NUMBER TO MANUFACTURER

Mfr. Code	Manufacturer	Address	City, State, Zip
000AE	GARDNER SPRING COMPANY	1115 N UTICA	TULSA, OK 74110
000CY	NORTHWEST FASTENER SALES, INC.	7923 SW CIRRUS DRIVE	BEAVERTON, OR 97005
000DF	KEN R HUMKE	2211 NW NICOLAI	PORTLAND, OREGON 97210
000FF	LEWIS SCREW	4114 SOUTH PEORIA AVE.	CHICAGO, IL 60609
000GK	RIGGS/LAMOREE CO.	422 N.W. 8TH AVE.	PORTLAND, OR 97209
000GY	DEK INC.	3480 SWENSEN AVE.	ST. CHARLES, IL 60174
00779	AMP, INC.	P.O. BOX 3608	HARRISBURG, PA 17105
01536	CAMCAR DIV OF TEXTRON INC. SEMS PRODUCTS UNIT	1818 CHRISTINA ST.	ROCKFORD, IL 61108
05574	VIKING INDUSTRIES, INC.	21001 NORDHOFF STREET	CHATSWORTH, CA 91311
06383	PANDUIT CORPORATION	17301 RIDGELAND	TINLEY PARK, IL 60477
09422	PLASTIC STAMPING CORPORATION	2216 W. ARMITAGE AVE.	CHICAGO, IL 60647
09922	BURNDY CORPORATION	RICHARDS AVENUE	NORWALK, CT 06852
12327	FREEWAY CORPORATION	9301 ALLEN DRIVE	CLEVELAND, OH 44125
13257	AMERACE, LTD.	10 ESNA PARK DRIVE	MARKHAM, ONTARIO, CANADA
18565	CHOMERICS INC.	77 DRAGON COURT	WOBURN, MA 01801
22526	BERG ELECTRONICS, INC.	YOUK EXPRESSWAY	NEW CUMBERLAND, PA 17070
24931	SPECIALITY CONNECTOR CO., INC.	2620 ENDRESS PLACE	GREENWOOD, IN 46142
28520	HEYMAN MFG. CO.	147 N. MICHIGAN AVE.	KENILWORTH, NJ 07033
49671	RCA CORPORATION	30 ROCKEFELLER PLAZA	NEW YORK, NY 10020
59730	THOMAS AND BETTS COMPANY	36 BUTLER ST.	ELIZABETH, NJ 07207
70485	ATLANTIC INDIA RUBBER WORKS, INC.	571 W. POLK ST.	CHICAGO, IL 60607
71279	CAMBRIDGE THERMIONIC CORP.	445 CONCORD AVE.	CAMBRIDGE, MA 02138
71590	CENTRALAB ELECTRONICS, DIV. OF GLOBE-UNION, INC.	P O BOX 858	FORT DODGE, IA 50501
73743	FISCHER SPECIAL MFG. CO.	446 MORGAN ST.	CINCINNATI, OH 45206
74970	JOHNSON, E. F., CO.	299 10TH AVE. S. W.	WASECA, MN 56093
75497	LAMSON AND SESSIONS CO.	5000 TIEDEMAN ROAD	CLEVELAND, OH 44144
76385	MINOR RUBBER CO. INC.	49 ACKERMAN ST	BLOOMFIELD, NJ 07003
77250	PHEOLL MANUFACTURING CO., DIVISION OF ALLIED PRODUCTS CORP.	5700 W. ROOSEVELT RD.	CHICAGO, IL 60650
78189	ILLINOIS TOOL WORKS, INC. SHAKEPROOF DIVISION	ST. CHARLES ROAD	ELGIN, IL 60120
78553	EATON CORPORATION, ENGINEERED FASTENERS DIVISION, TINNERMAN PLANT	PO BOX 6688,8700 BROOKPARK RD.	CLEVELAND, OH 44101
79136	WALDES, KOHINOOR, INC.	47-16 AUSTEL PLACE	LONG ISLAND CITY, NY 11101
79807	WROUGHT WASHER MFG. CO.	2100 S. O BAY ST.	MILWAUKEE, WI 53207
80009	TEKTRONIX, INC.	P O BOX 500	BEAVERTON, OR 97077
81741	CHICAGO LOCK CO.	4311 W. BELMONT AVE.	CHICAGO, IL 60641
83294	ARROW FASTENER CO., INC.	271 MAYHILL ST.	SADDLE BROOK, NJ 07662
83330	SMITH, HERMAN H., INC.	812 SNEDIKER AVE.	BROOKLYN, NY 11207
83385	CENTRAL SCREW CO.	2530 CRESCENT DR.	BROADVIEW, IL 60153
85471	BOYD, A. B., CO.	2527 GRANT AVENUE	SAN LEANDRO, CA 94579
86928	SEASTROM MFG. COMPANY, INC.	701 SONORA AVENUE	GLENDALE, CA 91201
87308	N. L. INDUSTRIES, INC., SOUTHERN SCREW DIV.	P. O. BOX 1360	STATESVILLE, NC 28677
89663	REESE, J. RAMSEY, INC.	71 MURRAY STREET	NEW YORK, NY 10007
91506	AUGAT, INC.	33 PERRY AVE.	ATTLEBORO, MA 02703
93907	TEXTRON INC. CAMCAR DIV	600 18TH AVE	ROCKFORD, IL 61101
95987	WECKESSER CO., INC.	4444 WEST IRVING PARK RD.	CHICAGO, IL 60641
98159	RUBBER TECK, INC.	19115 HAMILTON AVE., P O BOX 389	GARDENA, CA 90247
98291	SEALECTRO CORP.	225 HOYT	MAMARONECK, NY 10544
98978	INTERNATIONAL ELECTRONIC RESEARCH CORP.	135 W. MAGNOLIA BLVD.	BURBANK, CA 91502
S3109	C/O PANEL COMPONENTS CORP.	P.O. BOX 6626	SANTA ROSA, CA 95406
S3629	PANEL COMPONENTS CORP.	2015 SECOND ST.	BERKELEY, CA 94170
T1105	J PHILLIP INDUSTRIES INC	5713 NORTHWEST HIGHWAY	CHICAGO, IL 60646

Fig. & Index No.	Tektronix Part No.	Serial/Model No. Eff	Dscont	Qty	1 2 3 4 5	Name & Description	Mfr Code	Mfr Part Number
1-	----- -----			1		CKT BOARD ASSY:LOW VOLTS POWER SUPPLY		
	----- -----			-		(SEE A7A1 REPL)		
-1	441-1521-00			1		.CHASSIS,MODULAR:LOW VOLTAGE SUPPLY	80009	441-1521-00
						.**********(ATTACHING PARTS)**********		
-2	211-0315-00			11		.SCR,ASSEM WSHR:4-40 X 0.437 PNH,STL CD PL	000FF	ORD BY DESCR
-3	211-0661-00			1		.SCREW,MACHINE:4-40 X 0.25 INCH,PNH,STL	78189	ORD BY DESCR
-4	211-0692-00			2		.SCREW,MACHINE:6-32 X 2.918,0.25 HEX,BRASS	80009	211-0692-00
						.**********(END ATTACHING PARTS)**********		
-5	386-4715-00			1		.PLATE,XFMR MTG:ALUMINUM	80009	386-4715-00
-6	386-4405-00	B010100	B010114	1		.PANEL,BOTTOM:POWER SUPPLY	80009	386-4405-00
	386-4841-00	B010115		1		.PANEL,BOTTOM:ALUMINUM	80009	386-4841-00
-7	381-0424-00			1		.BAR SUPPORT:LV POWER SUPPLY COVER,AL	80009	381-0424-00
						.**********(ATTACHING PARTS)**********		
-8	211-0661-00			3		.SCREW,MACHINE:4-40 X 0.25 INCH,PNH,STL	78189	ORD BY DESCR
						.**********(END ATTACHING PARTS)**********		
-9	131-2440-00			1		.CONTACT,ELEC:GROUNDING,BRASS	80009	131-2440-00
						.**********(ATTACHING PARTS)**********		
-10	211-0275-00			2		.SCREW,SHOULDER:4-40 X 0.375 L,PAN HEAD,PO	93907	R80-20380-024
-11	210-0801-00			4		.WASHER,FLAT:0.14 ID X 0.025 THK,BRS NI	12327	ORD BY DESCR
-12	211-0661-00			1		.SCREW,MACHINE:4-40 X 0.25 INCH,PNH,STL	78189	ORD BY DESCR
-13	210-0201-00			1		.TERMINAL,LUG:0.12 ID,LOCKING,BRZ TIN PL	86928	ORD BY DESCR
						.**********(END ATTACHING PARTS)**********		
-14	210-0201-00			1		.TERMINAL,LUG:0.12 ID,LOCKING,BRZ TIN PL	86928	ORD BY DESCR
						.**********(ATTACHING PARTS)**********		
-15	210-0586-00			1		.NUT,PL,ASSEM WA:4-40 X 0.25,STL,CD PL	78189	211-041800-00
						.**********(END ATTACHING PARTS)**********		
-16	----- -----			1		.CKT BOARD ASSY:POWER SUPPLY OUTPUT		
	----- -----			-		.(SEE A7A1A3 REPL)		
						.**********(ATTACHING PARTS)**********		
-17	211-0315-00			4		.SCR,ASSEM WSHR:4-40 X 0.437 PNH,STL CD PL	000FF	ORD BY DESCR
-18	220-0863-00			3		.NUT BLOCK:0.312 SQ(2)4-40 THD,BRASS	80009	220-0863-00
						.**********(END ATTACHING PARTS)**********		
	----- -----			-		.CKT BOARD ASSY INCLUDES:		
-19	131-2590-00			1		..CONN,RCPT,ELEC:HEADER,PIN,1 X 2,0.25	00779	1-350946-0
						..**********(ATTACHING PARTS)**********		
-20	211-0315-00			2		..SCR,ASSEM WSHR:4-40 X 0.437 PNH,STL CD P	000FF	ORD BY DESCR
-21	210-0586-00			2		..NUT,PL,ASSEM WA:4-40 X 0.25,STL,CD PL	78189	211-041800-00
						..**********(END ATTACHING PARTS)**********		
-22	342-0535-00			2		..INSULATOR,PLATE:CAPACITOR,POLYENELENE	80009	342-0535-00
-23	200-0256-00			1		..SHLD,CAPACITOR:2.03 INCHES LONG	80009	200-0256-00
-24	131-0787-00			5		..TERMINAL,PIN:0.64L X 0.025 SQ	22526	47359
-25	131-0589-00			9		..TERMINAL,PIN:0.46 L X 0.025 SQ	22526	48283-029
-26	131-2441-00			2		..TERMINAL,PIN:1.0 L X 0.025 SQ,BRASS	22526	47799
-27	----- -----			1		.CKT BOARD ASSY:POWER SUPPLY INPUT		
	----- -----			-		.(SEE A7A1A1 REPL)		
						.**********(ATTACHING PARTS)**********		
-28	211-0315-00			5		.SCR,ASSEM WSHR:4-40 X 0.437 PNH,STL CD PL	000FF	ORD BY DESCR
-29	220-0863-00			3		.NUT BLOCK:0.312 SQ(2)4-40 THD,BRASS	80009	220-0863-00
						.**********(END ATTACHING PARTS)**********		
	----- -----			-		.CKT BOARD ASSY INCLUDES:		
-30	131-2589-00			1		..CONN,RCPT,ELEC:HEADER,PIN 1 X 3,0.25	00779	1-350947-0
						..**********(ATTACHING PARTS)**********		
-31	211-0315-00			2		..SCR,ASSEM WSHR:4-40 X 0.437 PNH,STL CD P	000FF	ORD BY DESCR
-32	210-0586-00			2		..NUT,PL,ASSEM WA:4-40 X 0.25,STL,CD PL	78189	211-041800-00
						..**********(END ATTACHING PARTS)**********		
-33	131-0589-00			6		..TERMINAL,PIN:0.46 L X 0.025 SQ	22526	48283-029
-34	386-4306-00			1		..PLATE,MOUNTING:DIODE,BRASS	80009	386-4306-00
-35	----- -----			2		..SEMICOND DI:W/HARDWARE(SEE A7A1A1CR125,		
	----- -----			-		..A7A1A1CR126 REPL)		
-36	----- -----			2		.CAP.,FXD:(SEE A7A1C329,A7A1C439 REPL)		
						.**********(ATTACHING PARTS)**********		
-37	212-0518-00			4		.SCREW,MACHINE:10-32 X 0.312,PNH,STL,CD PL	83385	ORD BY DESCR
-38	210-0010-00			4		.WASHER,LOCK:#10 INTL,0.02 THK,STL	78189	1210-00-00-0541C

Fig. & Index No.	Tektronix Part No.	Serial/Model No. Eff	Dscont	Qty	1 2 3 4 5 Name & Description	Mfr Code	Mfr Part Number
1-39	210-0973-00			4	.WASHER,FLAT:0.221 ID X 0.12 THK,STL	12327	ORD BY DESCR
-40	342-0562-00			1	.INSULATOR,FILM:CAP BKT,CKT BD	18565	OBD
-41	212-0560-00			4	.SCREW,MACHINE:10-32 X 0.312 INCH,FLH STL	75497	ORD BY DESCR
					.**********(END ATTACHING PARTS)*********		
-42	407-2437-01			1	.BRACKET,CMPNT:ALUMINUM	80009	407-2437-01
-43	407-2418-00			1	.BRACKET,COIL:	80009	407-2418-00
					.**********(ATTACHING PARTS)**********		
-44	211-0027-00			4	.SCREW,MACHINE:4-40 X 1.50 INCH,PNH STL	83385	ORD BY DESCR
					.**********(END ATTACHING PARTS)*********		
-45	346-0128-00	B010100	B010360	1	.STRAP,TIE DOWN:0.1W X 8.0" LONG,NYLON	06383	PLT2M
	346-0128-00	B010361		2	.STRAP,TIE DOWN:0.1W X 8.0" LONG,NYLON	06383	PLT2M
-46	342-0491-00			1	.INSULATOR,PLATE:DIODE,PLASTIC	80009	342-0491-00
					.**********(ATTACHING PARTS)**********		
-47	211-0014-00			2	.SCREW,MACHINE:4-40 X 0.50 INCH,PNH STL	83385	ORD BY DESCR
-48	211-0541-00			2	.SCREW,MACHINE:6-32 X 0.25"100 DEG,FLH STL	83385	ORD BY DESCR
					.**********(END ATTACHING PARTS)*********		
-49	----- -----			1	.CKT BOARD ASSY:POWER SUPPLY INVERTER		
	----- -----			-	.(SEE A7A1A2 REPL)		
					.**********(ATTACHING PARTS)**********		
-50	211-0315-00			6	.SCR,ASSEM WSHR:4-40 X 0.437 PNH,STL CD PL	000FF	ORD BY DESCR
-51	220-0863-00			4	.NUT BLOCK:0.312 SQ(2)4-40 THD,BRASS	80009	220-0863-00
					.**********(END ATTACHING PARTS)*********		
	----- -----			-	.CKT BOARD ASSY INCLUDES:		
-52	131-2594-00			6	..TERMINAL,STUD:0.156 L,CKT BD,BRASS	71279	140-1385-05
-53	343-0149-00			1	..CLAMP,LOOP:NYLON	80009	343-0149-00
-54	131-0608-00			6	..TERMINAL,PIN:0.365 L X 0.025 PH BRZ GOLD	22526	48283-036
-55	131-0993-00			2	..BUS,CONDUCTOR:2 WIRE BLACK	00779	850100-01
-56	214-0579-00			8	..TERM,TEST POINT:BRS CD PL	80009	214-0579-00
-57	136-0729-00	B010130		1	..SKT,PL-IN ELEK:MICROCKT,16 CONTACT	09922	DILB16P-108T
-58	220-0862-00			1	.NUT BAR:0.312 X 0.09 X 2,5(3)4-40	80009	220-0862-00
					.**********(ATTACHING PARTS)**********		
-59	211-0019-00			3	.SCREW,MACHINE:4-40 X 1.0 INCH,PNH STL	83385	ORD BY DESCR
					.**********(END ATTACHING PARTS)*********		
-60	342-0548-00			1	.INSULATOR,FILM:TRAN,POLYMIDE,KAPON	000GK	OBD
-61	342-0546-01			1	.INSULATOR,PLATE:2 X 4 X 0.95 X 0.01	80009	342-0546-01
-62	220-0863-00			2	.NUT BLOCK:0.312 SQ(2)4-40 THD,BRASS	80009	220-0863-00
					.**********(ATTACHING PARTS)**********		
-63	211-0315-00			2	.SCR,ASSEM WSHR:4-40 X 0.437 PNH,STL CD PL	000FF	ORD BY DESCR
					.**********(END ATTACHING PARTS)*********		
-64	204-0833-00			2	.BODY,FUSEHOLDER:3AG & 5 X 20MM FUSES	S3629	031.1653(MDLFEU)
-65	200-2264-00			2	.CAP.,FUSEHOLDER:3AG FUSES	S3629	FEK 031 1666
					.**********(ATTACHING PARTS)**********		
-66	210-1039-00			2	.WASHER,LOCK:INT,0.521 ID X 0.625 INCH O	24931	ORD BY DESCR
-67	210-0845-00			2	.WASHER,FLAT:0.500 ID X 0.625 INCH OD,ST	89663	634-R
					.**********(END ATTACHING PARTS)*********		
-68	342-0492-00			1	.INSULATOR,FILM:BRACKET,POLYMIDE	000GK	OBD
-69	210-0204-00			1	.TERMINAL,LUG:0.146 INCH DIA DE,45 DEG BE	78189	2157-06-01-2520N
					.**********(ATTACHING PARTS)**********		
-70	211-0504-00			1	.SCREW,MACHINE:6-32 X 0.250,PNH STL,CD PL	83385	ORD BY DESCR
					.**********(END ATTACHING PARTS)*********		
-71	334-4178-00			1	.PLATE,IDENT:MKD VOLTAGE & FUSE INFO	80009	334-4178-00
					.**********(ATTACHING PARTS)**********		
-72	211-0315-00			2	.SCR,ASSEM WSHR:4-40 X 0.437 PNH,STL CD PL	000FF	ORD BY DESCR
					.**********(END ATTACHING PARTS)*********		
-73	129-0323-00			4	.POST,ELEC-MECH:HEX,0.25 X 1 INCH LONG	80009	129-0323-00
					.**********(ATTACHING PARTS)**********		
-74	211-0315-00			6	.SCR,ASSEM WSHR:4-40 X 0.437 PNH,STL CD PL	000FF	ORD BY DESCR
					.**********(END ATTACHING PARTS)*********		
-75	----- -----			1	.FILTER,RFI:(SEE A7A1LF101 REPL)		
					.**********(ATTACHING PARTS)**********		
-76	211-0315-00			2	.SCR,ASSEM WSHR:4-40 X 0.437 PNH,STL CD PL	000FF	ORD BY DESCR
					.**********(END ATTACHING PARTS)*********		
-77	214-3004-00	B010100	B031042	1	.HEAT SINK,ELEC:LV MODULE	80009	214-3004-00
	214-3004-00	B031043		1	.HEAT SINK,ELEC:LV MODULE	80009	214-3004-00

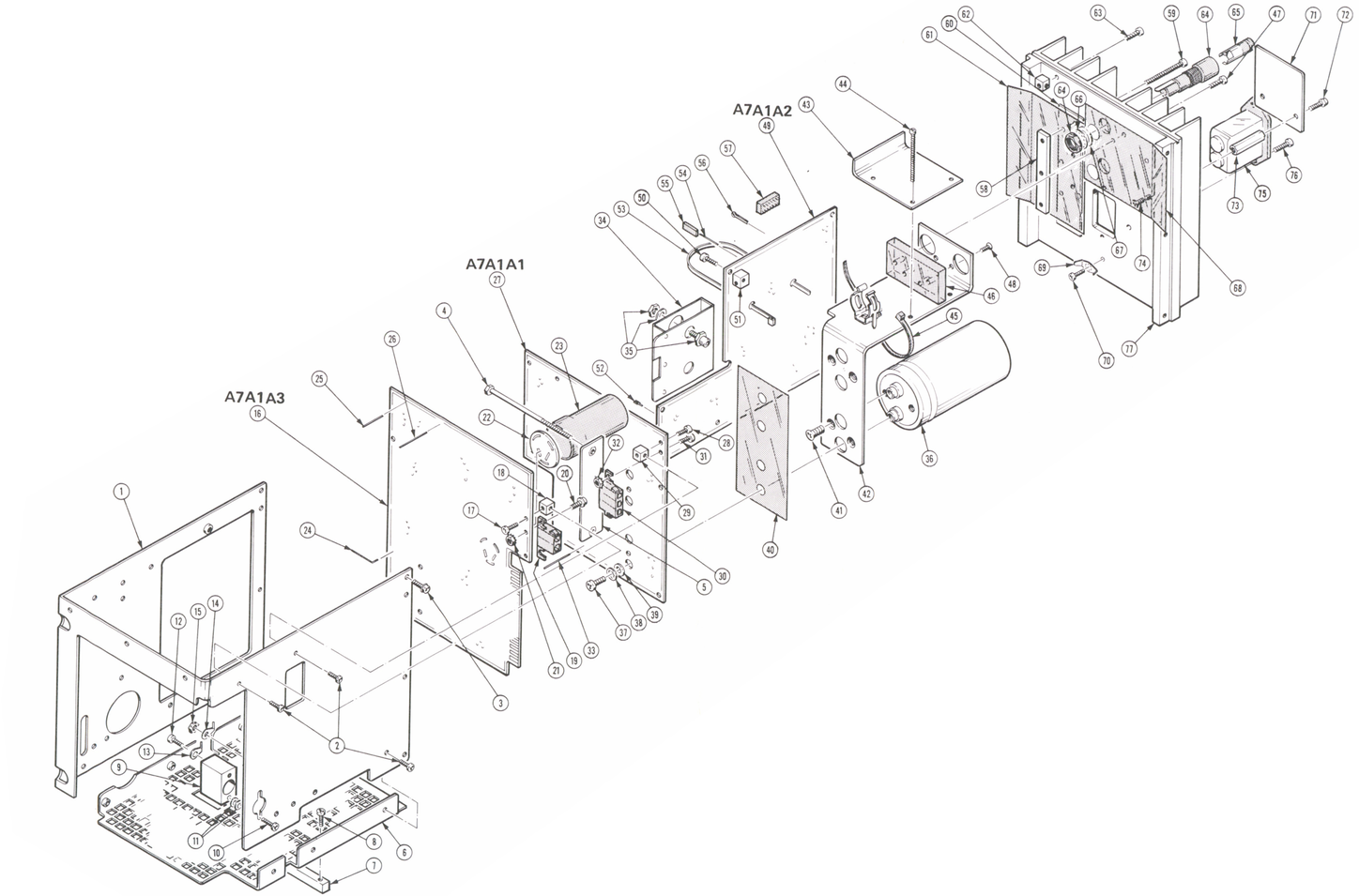
A7A1A2
A7A1A1
A7A1A3

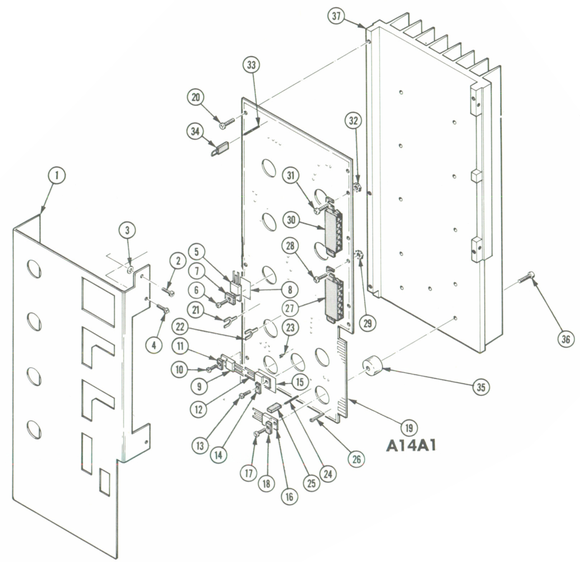
A14A1

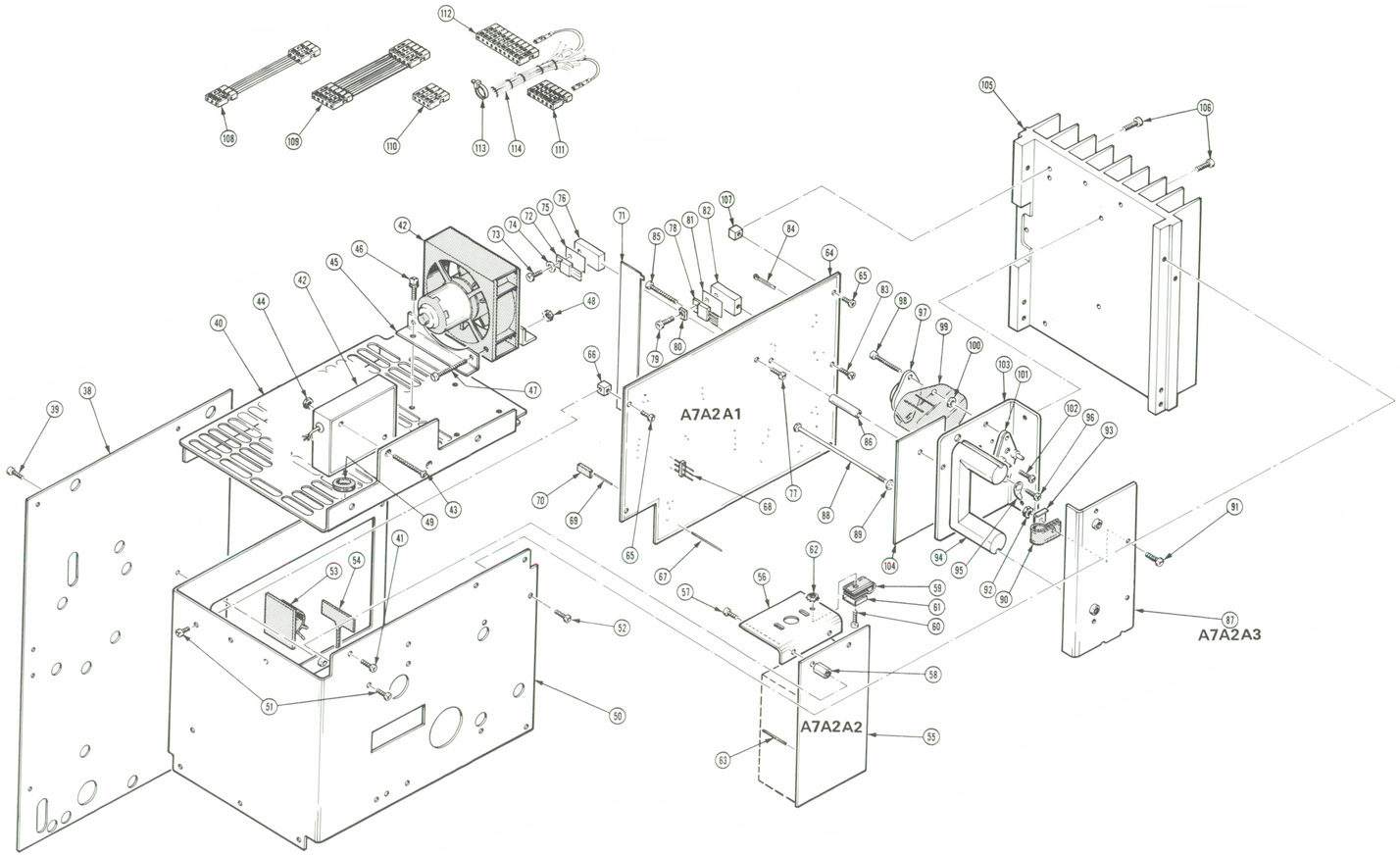
A7A2A1
A7A2A2
A7A2A3

@

Fig. & Index No.	Tektronix Part No.	Serial/Model No. Eff	Dscont	Qty	1 2 3 4 5	Name & Description	Mfr Code	Mfr Part Number
2-	----- -----			1		CKT BOARD ASSY:CONVERGENCE AMPL		
	----- -----			-		(SEE A14 REPL)		
-1	200-2432-00			1		.COVER,PROT:ALUMINUM,CONVERGENCE	80009	200-2432-00
						.**********(ATTACHING PARTS)**********		
-2	211-0315-00			1		.SCR,ASSEM WSHR:4-40 X 0.437 PNH,STL CD PL	000FF	ORD BY DESCR
-3	210-0804-00	B010131		1		.WASHER,FLAT:0.17 ID X 0.375 INCH OD,STL	12327	ORD BY DESCR
-4	211-0315-00			3		.SCR,ASSEM WSHR:4-40 X 0.437 PNH,STL CD PL	000FF	ORD BY DESCR
						.**********(END ATTACHING PARTS)**********		
	----- -----			-		.CKT BOARD ASSY INCLUDES:		
-5	----- -----			8		..TRANSISTOR:(SEE A14A1Q225,A14A1Q245,		
	----- -----			-		..A14A1Q425,A14A1Q445,A14A1Q525,		
	----- -----			-		..A14A1Q645,A14A1Q825,A14A1Q845 REPL)		
						..**********(ATTACHING PARTS)**********		
-6	211-0315-00			8		..SCR,ASSEM WSHR:4-40 X 0.437 PNH,STL CD P	000FF	ORD BY DESCR
-7	342-0536-00			8		..INSULATOR,XSTR:TO-220,POLYENELENE	80009	342-0536-00
-8	342-0563-00			8		..INSULATOR,PLATE:TRANSISTOR,FIBERGLAS	18565	69-11-8805-1674
						..**********(END ATTACHING PARTS)**********		
-9	----- -----			1		..MICROCIRCUIT:(SEE A14A1U927 REPL)		
						..**********(ATTACHING PARTS)**********		
-10	211-0315-00			1		..SCR,ASSEM WSHR:4-40 X 0.437 PNH,STL CD P	000FF	ORD BY DESCR
-11	342-0536-00			1		..INSULATOR,XSTR:TO-220,POLYENELENE	80009	342-0536-00
						..**********(END ATTACHING PARTS)**********		
-12	----- -----			1		..MICROCIRCUIT:(SEE A14A1U933 REPL)		
						..**********(ATTACHING PARTS)**********		
-13	211-0315-00			1		..SCR,ASSEM WSHR:4-40 X 0.437 PNH,STL CD P	000FF	ORD BY DESCR
-14	342-0536-00			1		..INSULATOR,XSTR:TO-220,POLYENELENE	80009	342-0536-00
-15	342-0563-00			1		..INSULATOR,PLATE:TRANSISTOR,FIBERGLAS	18565	69-11-8805-1674
						..**********(END ATTACHING PARTS)**********		
-16	----- -----			1		..MICROCIRCUIT:(SEE A14A1U947 REPL)		
						..**********(ATTACHING PARTS)**********		
-17	211-0315-00			1		..SCR,ASSEM WSHR:4-40 X 0.437 PNH,STL CD P	000FF	ORD BY DESCR
-18	342-0536-00			1		..INSULATOR,XSTR:TO-220,POLYENELENE	80009	342-0536-00
						..**********(END ATTACHING PARTS)**********		
-19	----- -----			1		.CKT BOARD ASSY:CONVERGENCE OUTPUT		
	----- -----			-		(SEE A14A1 REPL)		
						.**********(ATTACHING PARTS)**********		
-20	211-0315-00			5		.SCR,ASSEM WSHR:4-40 X 0.437 PNH,STL CD PL	000FF	ORD BY DESCR
						.**********(END ATTACHING PARTS)**********		
	----- -----			-		.CKT BOARD ASSY INCLUDES:		
-21	344-0255-00			6		..CLIP,ELECTRICAL:FUSE MOUNT	80009	344-0255-00
-22	344-0154-00			6		..CLIP,ELECTRICAL:FUSE,CKT BD MT	80009	344-0154-00
-23	131-2594-00			33		..TERMINAL,STUD:0.156 L,CKT BD,BRASS	71279	140-1385-05
-24	131-0608-00			12		..TERMINAL,PIN:0.365 L X 0.025 PH BRZ GOLD	22526	48283-036
-25	131-0993-00			4		..BUS,CONDUCTOR:2 WIRE BLACK	00779	850100-01
-26	214-0579-00			23		..TERM,TEST POINT:BRS CD PL	80009	214-0579-00
-27	131-2587-01			1		..CONN,RCPT,ELEC:CKT BD,1 X 6,0.25 SPACING	00779	64053-1
						..**********(ATTACHING PARTS)**********		
-28	211-0507-00			2		..SCREW,MACHINE:6-32 X 0.312,PNH STL,CD PL	83385	ORD BY DESCR
-29	210-0457-00			2		..NUT,PL,ASSEM WA:6-32 X 0.312,STL CD PL	83385	ORD BY DESCR
						..**********(END ATTACHING PARTS)**********		
-30	131-2587-00			1		..CONN,RCPT,ELEC:HEADER,1 X 4,0.25 SPACING	00779	640587-1
						..**********(ATTACHING PARTS)**********		
-31	211-0507-00			2		..SCREW,MACHINE:6-32 X 0.312,PNH STL,CD PL	83385	ORD BY DESCR
-32	210-0457-00			2		..NUT,PL,ASSEM WA:6-32 X 0.312,STL CD PL	83385	ORD BY DESCR
						..**********(END ATTACHING PARTS)**********		
-33	131-0589-00			3		..TERMINAL,PIN:0.46 L X 0.025 SQ	22526	48283-029
-34	131-1334-00			1		..BUS CONDUCTOR:	80009	131-1334-00
-35	214-2991-00			11		..HEAT SINK,XSTR:T-220,ALUMINUM	80009	214-2991-00
						..**********(ATTACHING PARTS)**********		
-36	211-0198-00			11		..SCREW,MACHINE:4-40 X 0.438 PNH,STL,POZ	77250	ORD BY DESCR
						..**********(END ATTACHING PARTS)**********		

Fig. & Index No.	Tektronix Part No.	Serial/Model No. Eff	Dscont	Qty	1 2 3 4 5 Name & Description	Mfr Code	Mfr Part Number
2-37	214-3000-00	B010100	B031042	1	..HEAT SINK,ELEC:ALUMINUM	80009	214-3000-00
	214-3000-00	B031043		1	..HEAT SINK,ELEC:ALUMINUM	80009	214-3000-00
-38	200-2434-00			1	COVER,CKT BD:LOW VOLTAGE SUPPLY	80009	200-2434-00
					..********(ATTACHING PARTS)**********		
-39	211-0315-00			10	SCR,ASSEM WSHR:4-40 X 0.437 PNH,STL CD PL	000FF	ORD BY DESCR
	211-0661-00			3	SCREW,MACHINE:4-40 X 0.25 INCH,PNH,STL	78189	ORD BY DESCR
					..********(END ATTACHING PARTS)*********		
	----- -----			1	CKT BOARD ASSY:HIGH VOLTAGE(SEE A7A2 REPL)		
-40	200-2653-01			1	.COVER,PROT:HV SUPPLY,AL	80009	200-2653-01
					.********(ATTACHING PARTS)**********		
-41	211-0510-00			3	.SCREW,MACHINE:6-32 X 0.375,PNH,STL,CD PL	83385	ORD BY DESCR
					.*********(END ATTACHING PARTS)*********		
-42	119-1527-00			1	.POWER SUPPLY:	80009	119-1527-00
					.********(ATTACHING PARTS)**********		
-43	211-0086-00			2	.SCREW,MACHINE:4-40 X 0.75 100° DEG,FLH ST	83385	ORD BY DESCR
-44	210-0586-00			2	.NUT,PL,ASSEM WA:4-40 X 0.25,STL,CD PL	78189	211-041800-00
					.*********(END ATTACHING PARTS)*********		
	----- -----			-	.POWER SUPPLY INCLUDES:		
	131-0621-00			2	..CONNECTOR,TERM:22-26 AWG,BRS & CU BE GOL	22526	46231
	352-0198-09			1	..CONN BODY,PL,EL:2 WIRE WHITE	80009	352-0198-09
-45	407-2815-00			2	.BRACKET,ANGLE:FAN,AL	80009	407-2815-00
					.********(ATTACHING PARTS)**********		
-46	211-0315-00			4	.SCR,ASSEM WSHR:4-40 X 0.437 PNH,STL CD PL	000FF	ORD BY DESCR
-47	211-0020-00			2	.SCREW,MACHINE:4-40 X 1.125 INCH,PNH STL	83385	ORD BY DESCR
-48	210-0586-00			2	.NUT,PL,ASSEM WA:4-40 X 0.25,STL,CD PL	78189	211-041800-00
					.*********(END ATTACHING PARTS)*********		
-49	348-0005-00			1	.GROMMET,RUBBER:0.50 INCH DIA	70485	230
-50	441-1515-00			1	.CHAS,MODULAR:HV SUPPLY,AL	80009	441-1515-00
					.********(ATTACHING PARTS)**********		
-51	211-0007-00			3	.SCREW,MACHINE:4-40 X 0.188,PNH STL,CD PL	83385	ORD BY DESCR
-52	211-0315-00			8	.SCR,ASSEM WSHR:4-40 X 0.437 PNH,STL CD PL	000FF	ORD BY DESCR
					.*********(END ATTACHING PARTS)*********		
-53	343-0853-00			1	.CLAMP,LOOP:0.5 DIA,NYLON	000GY	021-0500
-54	346-0127-00			1	.STRAP,TIE DOWN:4.0" L X 0.091" WIDE	59730	TY53M
-55	----- -----			1	.HIGH VOLTAGE FOCUS ASSY:(SEE A7A2A2 REPL)		
-56	407-2428-00			1	..BRACKET,ANGLE:VARIABLE RESISTOR,AL	80009	407-2428-00
					..********(ATTACHING PARTS)**********		
-57	211-0012-00			2	..SCREW,MACHINE:4-40 X 0.375,PNH STL CD PL	83385	ORD BY DESCR
-58	361-0041-00			2	..POST,ELEC-MECH:4-40 X 0.25 X 0.375 INCH	80009	361-0041-00
					..*********(END ATTACHING PARTS)*********		
-59	343-0001-00			1	..CLAMP,LOOP:0.15 INCH DIA,PLASTIC	95987	1-8-6B
					..********(ATTACHING PARTS)**********		
-60	211-0012-00			1	..SCREW,MACHINE:4-40 X 0.375,PNH STL CD PL	83385	ORD BY DESCR
-61	210-0863-00			1	..WSHR,LOOP CLAMP:0.187 ID U/W 0.5 W CLP,S	95987	C191
-62	210-0586-00			1	..NUT,PL,ASSEM WA:4-40 X 0.25,STL,CD PL	78189	211-041800-00
					..*********(END ATTACHING PARTS)*********		
-63	131-0589-00			7	..TERMINAL,PIN:0.46 L X 0.025 SQ	22526	48283-029
-64	----- -----			1	.CKT BOARD ASSY:HIGH VOLTAGE REGULATOR		
	----- -----			-	.(SEE A7A2A1 REPL)		
					.********(ATTACHING PARTS)**********		
-65	211-0315-00			4	.SCR,ASSEM WSHR:4-40 X 0.437 PNH,STL CD PL	000FF	ORD BY DESCR
					.*********(END ATTACHING PARTS)*********		
-66	220-0863-00			2	.NUT BLOCK:0.312 SQ(2)4-40 THD,BRASS	80009	220-0863-00
	----- -----			-	.CKT BOARD ASSY INCLUDES:		
-67	131-0589-00			19	..TERMINAL,PIN:0.46 L X 0.025 SQ	22526	48283-029
-68	131-1939-00			3	..TERM. SET,PIN:1 X 14,0.15 SPACING	22526	65561-114
-69	131-0608-00			3	..TERMINAL,PIN:0.365 L X 0.025 PH BRZ GOLD	22526	48283-036
-70	131-0993-00			1	..BUS,CONDUCTOR:2 WIRE BLACK	00779	850100-01
-71	337-2882-00			1	..SHIELD,ELEC:HV REGULATOR	80009	337-2882-00
-72	----- -----			1	..TRANSISTOR:(SEE A7A2A1Q225 REPL)		
					..********(ATTACHING PARTS)**********		
-73	211-0012-00			1	..SCREW,MACHINE:4-40 X 0.375,PNH STL CD PL	83385	ORD BY DESCR
-74	210-1122-00			1	..WASHER,LOCK:0.12 ID,DISHED,0.025 THK	86928	ORD BY DESCR

Fig. & Index No.	Tektronix Part No.	Serial/Model No. Eff	Dscont	Qty	1 2 3 4 5 Name & Description	Mfr Code	Mfr Part Number
2-75	342-0563-00			1	..INSULATOR,PLATE:TRANSISTOR,FIBERGLAS	18565	69-11-8805-1674
-76	214-3178-00			1	..HEAT SINK,XSTR:TO-220,AL	80009	214-3178-00
-77	211-0008-00			1	..SCREW,MACHINE:4-40 X 0.250,PNH,STL,POZ	83385	ORD BY DESCR
					..**********(END ATTACHING PARTS)**********		
-78	----- -----			1	..TRANSISTOR:(SEE A7A2A1Q304 REPL)		
					..**********(ATTACHING PARTS)**********		
-79	211-0198-00			1	..SCREW,MACHINE:4-40 X 0.438 PNH,STL,POZ	77250	ORD BY DESCR
-80	210-0536-00			1	..NUT,PRESSMOUNT:0.25-20 X 0.468 OD,AL	73743	30801-04
-81	342-0563-00			1	..INSULATOR,PLATE:TRANSISTOR,FIBERGLAS	18565	69-11-8805-1674
-82	214-3178-00			1	..HEAT SINK,XSTR:TO-220,AL	80009	214-3178-00
-83	211-0315-00			1	..SCR,ASSEM WSHR:4-40 X 0.437 PNH,STL CD P	000FF	ORD BY DESCR
					..**********(END ATTACHING PARTS)**********		
-84	214-0579-00			5	..TERM,TEST POINT:BRS CD PL	80009	214-0579-00
-85	211-0020-00			1	.SCREW,MACHINE:4-40 X 1.125 INCH,PNH STL	83385	ORD BY DESCR
-86	361-0370-00			1	.SPACER SLEEVE:0.84 L X 0.141 ID,DELRIN	80009	361-0370-00
	----- -----			1	.POWER SUPPLY SUB ASSY:(SEE A7A2A3 REPL)		
-87	386-4279-00			1	..PLATE,MOUNTING:ALUMINUM	80009	386-4279-00
					..**********(ATTACHING PARTS)**********		
-88	211-0689-00			2	..SCREW,MACHINE:6-32 X 3.585 L,HEX,BRASS	80009	211-0689-00
-89	210-0071-00			2	..WASHER,SPR TNSN:0.146 ID X 0.323" OD,STL	78189	4706-05-01-0531
					..**********(END ATTACHING PARTS)**********		
-90	343-0072-00			2	..CLAMP,LOOP:0.5 NYLON	95987	1-2-4NA
					..**********(ATTACHING PARTS)**********		
-91	211-0559-00			2	..SCREW,MACHINE:6-32 X 0.375"100 DEG,FLH S	83385	ORD BY DESCR
-92	210-0457-00			2	..NUT,PL,ASSEM WA:6-32 X 0.312,STL CD PL	83385	ORD BY DESCR
-93	210-0201-00			2	..TERMINAL,LUG:0.12 ID,LOCKING,BRZ TIN PL	86928	ORD BY DESCR
					..**********(END ATTACHING PARTS)**********		
-94	276-0745-00			2	..CORE,EM:U CORE,FERRITE,0.675 X1.51	80009	276-0745-00
-95	210-0201-00			1	..TERMINAL,LUG:0.12 ID,LOCKING,BRZ TIN PL	86928	ORD BY DESCR
					..**********(ATTACHING PARTS)**********		
-96	211-0007-00			1	..SCREW,MACHINE:4-40 X 0.188,PNH STL,CD PL	83385	ORD BY DESCR
					..**********(END ATTACHING PARTS)**********		
-97	----- -----			1	..TRANSISTOR:(SEE A7A2A3Q100 REPL)		
	179-2799-00	B010130		1	..WIRING HARNESS:HIGH VOLTAGE TRANSFORMER	80009	179-2799-00
					..**********(ATTACHING PARTS)**********		
-98	211-0551-00			2	..SCREW,MACHINE:6-32 X 0.562 INCH,PNH STL	83385	ORD BY DESCR
-99	342-0489-00			1	..INSULATOR,FILM:TRANSISTOR,POLYMIDE	80009	342-0489-00
-100	342-0488-01			2	..SPACER,XSTR:0.156 ID X 0.37 OD X 0.125	80009	342-0488-01
					..**********(END ATTACHING PARTS)**********		
-101	136-0135-01			1	..SKT,PL-IN ELEK:TRANSISTOR,2 CONT	91506	8080-1G7
					..**********(ATTACHING PARTS)**********		
-102	211-0012-00			1	..SCREW,MACHINE:4-40 X 0.375,PNH STL CD PL	83385	ORD BY DESCR
					..**********(END ATTACHING PARTS)**********		
-103	407-2649-00	B010100	B010151	1	..BRACKET,SPRT:HV TRANSFORMER,AL	80009	407-2649-00
	407-2649-01	B010152		1	..BRACKET,SPRT:HV TRANSFORMER,AL	80009	407-2649-01
-104	392-0237-01			1	..TERMINAL BOARD:6 CONT,EPOXY GLASS	80009	392-0237-01
	175-1255-00			1	..CABLE,RF:50 OHM COAX,3.35 FT	80009	175-1255-00
-105	214-3003-00	B010100	B031042	1	.HEAT SINK,ELEC:HV MODULE	80009	214-3003-00
	214-3003-01	B031043		1	.HEAT SINK,ELEC:HV MODULE	80009	214-3003-00
					.**********(ATTACHING PARTS)**********		
-106	211-0315-00			5	.SCR,ASSEM WSHR:4-40 X 0.437 PNH,STL CD PL	000FF	ORD BY DESCR
-107	220-0863-00			2	.NUT BLOCK:0.312 SQ(2)4-40 THD,BRASS	80009	220-0863-00
					.**********(END ATTACHING PARTS)**********		
-108	175-3715-00			1	.CA ASSY,SP,ELEC:2,26 AWG,6.0 L,8-N	80009	175-3715-00
	131-0621-00			4	..CONNECTOR,TERM:22-26 AWG,BRS & CU BE GOL	22526	46231
	131-0792-00			2	..CONNECTOR,TERM:18-20 AWG,CU BE GOLD PL	22526	46221
	352-0199-03			2	..CONN BODY,PL,EL:3 WIRE ORANGE	80009	352-0199-03
-109	175-3762-00			1	.CA ASSY,SP,ELEC:3,26 AWG,9.0 L,RIBBON	80009	175-3762-00
	131-0621-00			6	..CONNECTOR,TERM:22-26 AWG,BRS & CU BE GOL	22526	46231
	352-0201-05			2	..CONN BODY,PL,EL:5 WIRE GREEN	80009	352-0201-05
	179-2799-00	B010100	B010129	1	.WIRING HARNESS:HIGH VOLTAGE TRANSFORMER	80009	179-2799-00
-110	352-0200-02			1	..CONN BODY,PL EL:4 WIRE RED	80009	352-0200-02
	342-0549-00			3	..INSULATOR,PLATE:DISPLAY,FISH PAPER	80009	342-0549-00

Fig. & Index No.	Tektronix Part No.	Serial/Model No. Eff	Dscont	Qty	1 2 3 4 5	Name & Description	Mfr Code	Mfr Part Number
2-	179-2800-00			1		.WIRING HARNESS:HIGH VOLTAGE INPUT	80009	179-2800-00
-111	352-0202-01			2		..CONN BODY,PL,EL:6 WIRE BROWN	80009	352-0202-01
-112	352-0206-06			2		..HLDR,TERM CONN:10 WIRE BLUE	80009	352-0206-06
-113	342-0549-00			4		..INSULATOR,PLATE:DISPLAY,FISH PAPER	80009	342-0549-00
-114	195-1751-00			1		.LEAD,ELECTRICAL:26 AWG,7.0 L,7-04	80009	195-1751-00
	131-0621-00			2		..CONNECTOR,TERM:22-26 AWG,BRS & CU BE GOL	22526	46231
	352-0197-00			2		..CONN BODY,PL,EL:1 WIRE BLACK	80009	352-0197-00

Fig. & Index No.	Tektronix Part No.	Serial/Model No. Eff	Dscont	Qty	1 2 3 4 5 Name & Description	Mfr Code	Mfr Part Number
3-	----- -----			1	CKT BOARD ASSY:RASTER CONTROL(SEE A9 REPL)		
-1	200-2437-00			1	.COVER,PROT:CKT BD,TOP,AL	80009	200-2437-00
					.**********(ATTACHING PARTS)**********		
-2	211-0315-00			5	.SCR,ASSEM WSHR:4-40 X 0.437 PNH,STL CD PL	000FF	ORD BY DESCR
					.**********(END ATTACHING PARTS)*********		
-3	----- -----			1	.CKT BOARD ASSY:RASTER CONTROL		
	----- -----			-	.(SEE A9A1 REPL)		
					.**********(ATTACHING PARTS)**********		
-4	211-0315-00			5	.SCR,ASSEM WSHR:4-40 X 0.437 PNH,STL CD PL	000FF	ORD BY DESCR
					.**********(END ATTACHING PARTS)*********		
	----- -----			-	.CKT BOARD ASSY INCLUDES:		
-5	----- -----			1	..MICROCIRCUIT:(SEE A9A1U110 REPL)		
					..**********(ATTACHING PARTS)**********		
-6	211-0008-00			1	..SCREW,MACHINE:4-40 X 0.250,PNH,STL,POZ	83385	ORD BY DESCR
-7	210-0586-00			1	..NUT,PL,ASSEM WA:4-40 X 0.25,STL,CD PL	78189	211-041800-00
					..**********(END ATTACHING PARTS)*********		
-8	----- -----			1	..MICROCIRCUIT:(SEE A9A1U310 REPL)		
					..**********(ATTACHING PARTS)**********		
-9	211-0008-00			1	..SCREW,MACHINE:4-40 X 0.250,PNH,STL,POZ	83385	ORD BY DESCR
-10	210-0586-00			1	..NUT,PL,ASSEM WA:4-40 X 0.25,STL,CD PL	78189	211-041800-00
					..**********(END ATTACHING PARTS)*********		
-11	----- -----			1	..MICROCIRCUIT:(SEE A9A1U410 REPL)		
					..**********(ATTACHING PARTS)**********		
-12	211-0008-00			1	..SCREW,MACHINE:4-40 X 0.250,PNH,STL,POZ	83385	ORD BY DESCR
-13	210-0586-00			1	..NUT,PL,ASSEM WA:4-40 X 0.25,STL,CD PL	78189	211-041800-00
					..**********(END ATTACHING PARTS)*********		
-14	131-2594-00			9	..TERMINAL,STUD:0.156 L,CKT BD,BRASS	71279	140-1385-05
-15	214-0579-00			31	..TERM,TEST POINT:BRS CD PL	80009	214-0579-00
-16	131-0608-00			3	..TERMINAL,PIN:0.365 L X 0.025 PH BRZ GOLD	22526	48283-036
-17	131-0993-00			1	..BUS,CONDUCTOR:2 WIRE BLACK	00779	850100-01
-18	200-2438-00			1	.COVER,MODULE:CKT BD,BOTTOM	80009	200-2438-00
					.**********(ATTACHING PARTS)**********		
-19	211-0315-00			7	.SCR,ASSEM WSHR:4-40 X 0.437 PNH,STL CD PL	000FF	ORD BY DESCR
-20	210-0804-00	B010131		1	.WASHER,FLAT:0.17 ID X 0.375 INCH OD,STL	12327	ORD BY DESCR
-21	211-0510-00			2	.SCREW,MACHINE:6-32 X 0.375,PNH,STL,CD PL	83385	ORD BY DESCR
					.**********(END ATTACHING PARTS)*********		
-22	220-0863-00			7	.NUT BLOCK:0.312 SQ(2)4-40 THD,BRASS	80009	220-0863-00
	----- -----			1	CKT BOARD ASSY:VERTICAL DEFLECTION		
	----- -----			-	(SEE A10 REPL)		
-23	200-2431-00			1	.COVER,PROT:	80009	200-2431-00
					.**********(ATTACHING PARTS)**********		
-24	211-0510-00			2	.SCREW,MACHINE:6-32 X 0.375,PNH,STL,CD PL	83385	ORD BY DESCR
-25	210-0804-00	B010131		1	.WASHER,FLAT:0.17 ID X 0.375 INCH OD,STL	12327	ORD BY DESCR
-26	211-0315-00			4	.SCR,ASSEM WSHR:4-40 X 0.437 PNH,STL CD PL	000FF	ORD BY DESCR
					.**********(END ATTACHING PARTS)*********		
	----- -----			-	.CKT BOARD ASSY INCLUDES:		
-27	----- -----			3	..TRANSISTOR:(SEE A10A1Q130,A10A1Q223,		
	----- -----			-	..A10A1Q243 REPL)		
					..**********(ATTACHING PARTS)**********		
-28	211-0315-00			3	..SCR,ASSEM WSHR:4-40 X 0.437 PNH,STL CD P	000FF	ORD BY DESCR
-29	342-0536-00			3	..INSULATOR,XSTR:TO-220,POLYENELENE	80009	342-0536-00
-30	342-0563-00			3	..INSULATOR,PLATE:TRANSISTOR,FIBERGLAS	18565	69-11-8805-1674
					..**********(END ATTACHING PARTS)*********		
-31	----- -----			2	..TRANSISTOR:(SEE A10A1Q727,		
	----- -----			-	..A10Q1Q747 REPL)		
					..**********(ATTACHING PARTS)**********		
-32	211-0315-00			2	..SCR,ASSEM WSHR:4-40 X 0.437 PNH,STL CD P	000FF	ORD BY DESCR
-33	342-0536-00			2	..INSULATOR,XSTR:TO-220,POLYENELENE	80009	342-0536-00
-34	342-0563-00			2	..INSULATOR,PLATE:TRANSISTOR,FIBERGLAS	18565	69-11-8805-1674
					..**********(END ATTACHING PARTS)*********		
-35	----- -----			1	..MICROCIRCUIT:(SEE A10A1U834 REPL)		
					..**********(ATTACHING PARTS)**********		
-36	211-0315-00			1	..SCR,ASSEM WSHR:4-40 X 0.437 PNH,STL CD P	000FF	ORD BY DESCR
-37	342-0536-00			1	..INSULATOR,XSTR:TO-220,POLYENELENE	80009	342-0536-00
-38	342-0563-00			1	..INSULATOR,PLATE:TRANSISTOR,FIBERGLAS	18565	69-11-8805-1674
					..**********(END ATTACHING PARTS)*********		

Fig. & Index No.	Tektronix Part No.	Serial/Model No. Eff	Dscont	Qty	1 2 3 4 5 Name & Description	Mfr Code	Mfr Part Number
3-39	----- -----			1	..MICROCIRCUIT:(SEE A10A1U842 REPL)		
					..**********(ATTACHING PARTS)**********		
-40	211-0315-00			1	..SCR,ASSEM WSHR:4-40 X 0.437 PNH,STL CD P	000FF	ORD BY DESCR
-41	342-0536-00			1	..INSULATOR,XSTR:TO-220,POLYENELENE	80009	342-0536-00
					..*********(END ATTACHING PARTS)*********		
-42	----- -----			1	.CKT BOARD ASSY:VERTICAL DEFLECTION		
	----- -----			-	.(SEE A10A1 REPL)		
					.**********(ATTACHING PARTS)**********		
-43	211-0315-00			5	.SCR,ASSEM WSHR:4-40 X 0.437 PNH,STL CD PL	000FF	ORD BY DESCR
					.*********(END ATTACHING PARTS)*********		
	----- -----			-	.CKT BOARD ASSY INCLUDES:		
-44	131-2588-00			1	..CONN,RCPT,ELEC:HEADER,1 X 4,0.25 SPACING	00779	1-350948-D
					..**********(ATTACHING PARTS)**********		
-45	211-0507-00			2	..SCREW,MACHINE:6-32 X 0.312,PNH STL,CD PL	83385	ORD BY DESCR
-46	210-0457-00			2	..NUT,PL,ASSEM WA:6-32 X 0.312,STL CD PL	83385	ORD BY DESCR
					..*********(END ATTACHING PARTS)*********		
-47	131-0608-00			3	..TERMINAL,PIN:0.365 L X 0.025 PH BRZ GOLD	22526	48283-036
-48	131-0993-00			1	..BUS,CONDUCTOR:2 WIRE BLACK	00779	850100-01
-49	214-0579-00			24	..TERM,TEST POINT:BRS CD PL	80009	214-0579-00
-50	131-2594-00			21	..TERMINAL,STUD:0.156 L,CKT BD,BRASS	71279	140-1385-05
-51	214-2991-00			7	..HEAT SINK,XSTR:T-220,ALUMINUM	80009	214-2991-00
					..**********(ATTACHING PARTS)**********		
-52	211-0315-00			7	..SCR,ASSEM WSHR:4-40 X 0.437 PNH,STL CD P	000FF	ORD BY DESCR
					..*********(END ATTACHING PARTS)*********		
-53	214-3001-00	B010100	B031042	1	..HEAT SINK,ELEC:ALUMINUM	80009	214-3001-00
	214-3001-00	B031043		1	..HEAT SINK,ELEC:ALUMINUM	80009	214-3001-00
	----- -----			1	CKT BOARD ASSY:HORIZONTAL DEFLECTION		
	----- -----			-	(SEE A11 REPL)		
					**********(ATTACHING PARTS)**********		
-54	211-0510-00			2	SCREW,MACHINE:6-32 X 0.375,PNH,STL,CD PL	83385	ORD BY DESCR
-55	210-0804-00	B010131		2	WASHER,FLAT:0.17 ID X 0.375 INCH OD,STL	12327	ORD BY DESCR
					**********(END ATTACHING PARTS)*********		
-56	200-2430-00			1	COVER,PROT:	80009	200-2430-00
					**********(ATTACHING PARTS)**********		
-57	211-0315-00			5	SCR,ASSEM WSHR:4-40 X 0.437 PNH,STL CD PL	000FF	ORD BY DESCR
					**********(END ATTACHING PARTS)*********		
-58	198-4347-00	B010100	B010114	2	.WIRE SET,ELEC:	80009	198-4347-00
	198-4347-00	B010115	B010159	3	.WIRE SET,ELEC:	80009	198-4347-00
	198-4347-00	B010160		4	.WIRE SET,ELEC:	80009	198-4347-00
	352-0198-00	B010100	B010114	2	..HLDR,TERM CONN:2 WIRE BLACK	80009	352-0198-00
	352-0198-00	B010115	B010159	3	..HLDR,TERM CONN:2 WIRE BLACK	80009	352-0198-00
	352-0198-00	B010160		4	..HLDR,TERM CONN:2 WIRE BLACK	80009	352-0198-00
-59	198-4346-00	B010100	B010114	2	.WIRE SET,ELEC:	80009	198-4346-00
	198-4346-00	B010115	B010159	1	.WIRE SET,ELEC:	80009	198-4346-00
	198-4346-00	B010160		1	.WIRE SET,ELEC:	80009	198-4346-00
	352-0202-00	B010100	B010114	2	..HLDR,TERM CONN:6 WIRE BLACK	80009	352-0202-00
	352-0202-00	B010115	B010159	1	..HLDR,TERM CONN:6 WIRE BLACK	80009	352-0202-00
	352-0202-00	B010160		1	..HLDR,TERM CONN:6 WIRE BLACK	80009	352-0202-00
-60	198-4350-00	B010100	B010159	1	.WIRE SET,ELEC:	80009	198-4350-00
	198-4350-00	B010160		1	.WIRE SET,ELEC:	80009	198-4350-00
	352-0202-00	B010100	B010159	1	..HLDR,TERM CONN:6 WIRE BLACK	80009	352-0202-00
	352-0202-00	B010160		1	..HLDR,TERM CONN:6 WIRE BLACK	80009	352-0202-00
-61	----- -----			1	.CKT BOARD ASSY:H DELAY STABILIZER		
	----- -----			-	.(SEE A11A2)		
					.**********(ATTACHING PARTS)**********		
-62	211-0315-00			4	.SCR,ASSEM WSHR:4-40 X 0.437 PNH,STL CD PL	000FF	ORD BY DESCR
					.**********(END ATTACHING PARTS)*********		
	----- -----			-	.CKT BOARD ASSY INCLUDES:		
-63	214-0579-00			19	..TERM,TEST POINT:BRS CD PL	80009	214-0579-00
-64	131-0589-00	B010100	B010159	50	..TERMINAL,PIN:0.46 L X 0.025 SQ	22526	48283-029
	131-0589-00	B010160		53	..TERMINAL,PIN:0.46 L X 0.025 SQ	22526	48283-029
-65	131-0608-00	B010100	B010159	3	..TERMINAL,PIN:0.365 L X 0.025 PH BRZ GOLD	22526	48283-036
	131-0608-00	B010160		6	..TERMINAL,PIN:0.365 L X 0.025 PH BRZ GOLD	22526	48283-036
-66	131-0993-00	B010100	B010159	1	..BUS,CONDUCTOR:2 WIRE BLACK	00779	850100-01
	131-0993-00	B010160		2	..BUS,CONDUCTOR:2 WIRE BLACK	00779	850100-01

Fig. & Index No.	Tektronix Part No.	Serial/Model No. Eff	Dscont	Qty	1 2 3 4 5 Name & Description	Mfr Code	Mfr Part Number
3-67	337-2714-00			1	..SHIELD,ELEC:CKT BD,BRASS	80009	337-2714-00
-68	129-0793-00			4	.SPACER,POST:1.835 L,W/4-40 INT & EXT TH	80009	129-0793-00
	198-4355-00			1	.WIRE SET,ELEC:	80009	198-4355-00
	----- -----			-	.(J141,J142)		
-69	352-0206-01			2	..HLDR,TERM CONN:10 WIRE BROWN	80009	352-0206-01
	198-4353-00			1	.WIRE SET,ELEC:	80009	198-4353-00
	----- -----			-	.(J131,J132)		
-70	352-0200-02			2	..CONN BODY,PL EL:4 WIRE RED	80009	352-0200-02
	198-4354-00			1	.WIRE SET,ELEC:	80009	198-4354-00
	----- -----			-	.(J110,J111)		
-71	352-0201-03			2	..CONN BODY,PL,EL:5 WIRE ORANGE	80009	352-0201-03
	----- -----			-	.CKT BOARD ASSY:A11A1 INCLUDES		
-72	----- -----			1	..TRANSISTOR:(SEE A11A1Q210 REPL,PART OF		
	----- -----			-	..A11A1)		
					..**********(ATTACHING PARTS)**********		
-73	211-0315-00			1	..SCR,ASSEM WSHR:4-40 X 0.437 PNH,STL CD P	000FF	ORD BY DESCR
-74	342-0536-00			1	..INSULATOR,XSTR:TO-220,POLYENELENE	80009	342-0536-00
-75	342-0563-00			1	..INSULATOR,PLATE:TRANSISTOR,FIBERGLAS	18565	69-11-8805-1674
					..**********(END ATTACHING PARTS)**********		
-76	----- -----			2	..TRANSISTOR:(SEE A11A1Q121,A11A1Q133		
	----- -----			-	..REPL,PART OF A11A1)		
					..**********(ATTACHING PARTS)**********		
-77	211-0014-00			2	..SCREW,MACHINE:4-40 X 0.50 INCH,PNH STL	83385	ORD BY DESCR
-78	342-0536-00			2	..INSULATOR,XSTR:TO-220,POLYENELENE	80009	342-0536-00
-79	342-0563-00			2	..INSULATOR,PLATE:TRANSISTOR,FIBERGLAS	18565	69-11-8805-1674
					..**********(END ATTACHING PARTS)**********		
-80	----- -----			1	..TRANSISTOR:(SEE A11A1Q230 REPL,		
	----- -----			-	..PART OFA11A1)		
					..**********(ATTACHING PARTS)**********		
-81	211-0315-00			1	..SCR,ASSEM WSHR:4-40 X 0.437 PNH,STL CD P	000FF	ORD BY DESCR
-82	342-0536-00			1	..INSULATOR,XSTR:TO-220,POLYENELENE	80009	342-0536-00
-83	342-0563-00			1	..INSULATOR,PLATE:TRANSISTOR,FIBERGLAS	18565	69-11-8805-1674
					..**********(END ATTACHING PARTS)**********		
-84	----- -----			2	..TRANSISTOR:(SEE A11A1Q440,A11A1Q442		
	----- -----			-	..REPL,PART OF A11A1)		
					..**********(ATTACHING PARTS)**********		
-85	211-0159-00			2	..SCREW,MACHINE:2-56 X 0.375 INCH,PNH STL	87308	ORD BY DESCR
-86	210-1122-00			2	..WASHER,LOCK:0.12 ID,DISHED,0.025 THK	86928	ORD BY DESCR
-87	210-0943-00			2	..WASHER,FLAT:0.163 ID X 0.028 THK,MICA	80009	210-0943-00
					..**********(END ATTACHING PARTS)**********		
-88	----- -----			1	.CKT BOARD ASSY:HORIZONTAL DEFLECTION		
	----- -----			-	.(SEE A11A1 REPL)		
					.**********(ATTACHING PARTS)**********		
-89	211-0315-00			2	.SCR,ASSEM WSHR:4-40 X 0.437 PNH,STL CD PL	000FF	ORD BY DESCR
					.**********(END ATTACHING PARTS)**********		
	----- -----			-	.CKT BOARD ASSY INCLUDES:		
-90	214-0579-00			28	..TERM,TEST POINT:BRS CD PL	80009	214-0579-00
-91	131-0608-00	B010100	B010159	3	..TERMINAL,PIN:0.365 L X 0.025 PH BRZ GOLD	22526	48283-036
	131-0608-00	B010160		6	..TERMINAL,PIN:0.365 L X 0.025 PH BRZ GOLD	22526	48283-036
-92	131-0993-00	B010160		1	..BUS,CONDUCTOR:2 WIRE BLACK	00779	850100-01
-93	214-0269-00			2	..HEAT SINK,XSTR:0.312 DIA X 0.75 L	98978	TXD-032-75
-94	344-0154-00			2	..CLIP,ELECTRICAL:FUSE,CKT BD MT	80009	344-0154-00
-95	131-1334-00			1	..BUS CONDUCTOR:	80009	131-1334-00
-96	136-0260-02			1	..SKT,PL-IN ELEK:MICROCIRCUIT,16 DIP,LOW C	09922	DILB16P-108T
-97	131-2594-00			12	..TERMINAL,STUD:0.156 L,CKT BD,BRASS	71279	140-1385-05
-98	131-0589-00			23	..TERMINAL,PIN:0.46 L X 0.025 SQ	22526	48283-029
	198-4701-00			1	..WIRE SET,ELEC:	80009	198-4701-00
-99	407-2442-00			1	..BRACKET,SUPPORT:CONNECTOR	80009	407-2442-00
					..**********(ATTACHING PARTS)**********		
-100	211-0315-00			3	..SCR,ASSEM WSHR:4-40 X 0.437 PNH,STL CD P	000FF	ORD BY DESCR
					..**********(END ATTACHING PARTS)**********		
-101	131-2591-00			1	..CONTACT,ELEC:CONN,MALE,PH BRZ TINNED	00779	350218-3

Fig. & Index No.	Tektronix Part No.	Serial/Model No. Eff	Dscont	Qty	1 2 3 4 5 Name & Description	Mfr Code	Mfr Part Number
3-102	200-0500-01			1	..COVER,XSTR:W/NOMENCLATURE	80009	200-0500-01
					..**********(ATTACHING PARTS)**********		
-103	211-0061-00			2	..SCREW,MACHINE:4-40 X 0.50,FILH,STL,CD PL	83385	ORD BY DESCR
					..*********(END ATTACHING PARTS)*********		
-104	----- -----			1	..TRANSISTOR:(SEE A11A1Q920 RPL)		
					..**********(ATTACHING PARTS)**********		
-105	211-0551-00			2	..SCREW,MACHINE:6-32 X 0.562 INCH,PNH STL	83385	ORD BY DESCR
-106	342-0489-00			1	..INSULATOR,FILM:TRANSISTOR,POLYMIDE	80009	342-0489-00
-107	342-0488-00	B010100	B010114	2	..SPACER,XSTR:0.156 ID X 0.37 OD X 0.125	80009	342-0488-00
	342-0488-01	B010115		2	..SPACER,XSTR:0.156 ID X 0.37 OD X 0.125	80009	342-0488-01
-108	136-0135-01			1	..SKT,PL-IN ELEK:TRANSISTOR,2 CONT	91506	8080-1G7
					..*********(END ATTACHING PARTS)*********		
-109	200-0500-01			1	..COVER,XSTR:W/NOMENCLATURE	80009	200-0500-01
					..**********(ATTACHING PARTS)**********		
-110	211-0061-00			2	..SCREW,MACHINE:4-40 X 0.50,FILH,STL,CD PL	83385	ORD BY DESCR
					..*********(END ATTACHING PARTS)*********		
-111	----- -----			1	..TRANSISTOR:(SEE A11A1Q330 REPL)		
					..**********(ATTACHING PARTS)**********		
-112	211-0551-00			2	..SCREW,MACHINE:6-32 X 0.562 INCH,PNH STL	83385	ORD BY DESCR
-113	342-0489-00			1	..INSULATOR,FILM:TRANSISTOR,POLYMIDE	80009	342-0489-00
-114	342-0488-00	B010100	B010114	2	..SPACER,XSTR:0.156 ID X 0.37 OD X 0.125	80009	342-0488-00
	342-0488-01	B010115		2	..SPACER,XSTR:0.156 ID X 0.37 OD X 0.125	80009	342-0488-01
-115	136-0135-01			1	..SKT,PL-IN ELEK:TRANSISTOR,2 CONT	91506	8080-1G7
					..*********(END ATTACHING PARTS)*********		
-116	214-2993-00			2	..HEAT SINK,XSTR:TO-220,AL	80009	214-2993-00
					..**********(ATTACHING PARTS)**********		
-117	211-0315-00			2	..SCR,ASSEM WSHR:4-40 X 0.437 PNH,STL CD P	000FF	ORD BY DESCR
					..*********(END ATTACHING PARTS)*********		
-118	214-2991-00			2	..HEAT SINK,XSTR:T-220,ALUMINUM	80009	214-2991-00
					..**********(ATTACHING PARTS)**********		
-119	211-0315-00			2	..SCR,ASSEM WSHR:4-40 X 0.437 PNH,STL CD P	000FF	ORD BY DESCR
					..*********(END ATTACHING PARTS)*********		
-120	214-3175-00			2	..HEAT SINK,XSTR:TO-220-,AL	80009	214-3175-00
					..**********(ATTACHING PARTS)**********		
-121	211-0315-00			2	..SCR,ASSEM WSHR:4-40 X 0.437 PNH,STL CD P	000FF	ORD BY DESCR
					..*********(END ATTACHING PARTS)*********		
-122	214-3002-00	B010100	B031042	1	..HEAT SINK,XSTR:TO-3,ALUMINUM	80009	214-3002-00
	214-3002-01	B031043		1	..HEAT SINK,XSTR:T0-3,ALUMINUM	80009	214-3002-01

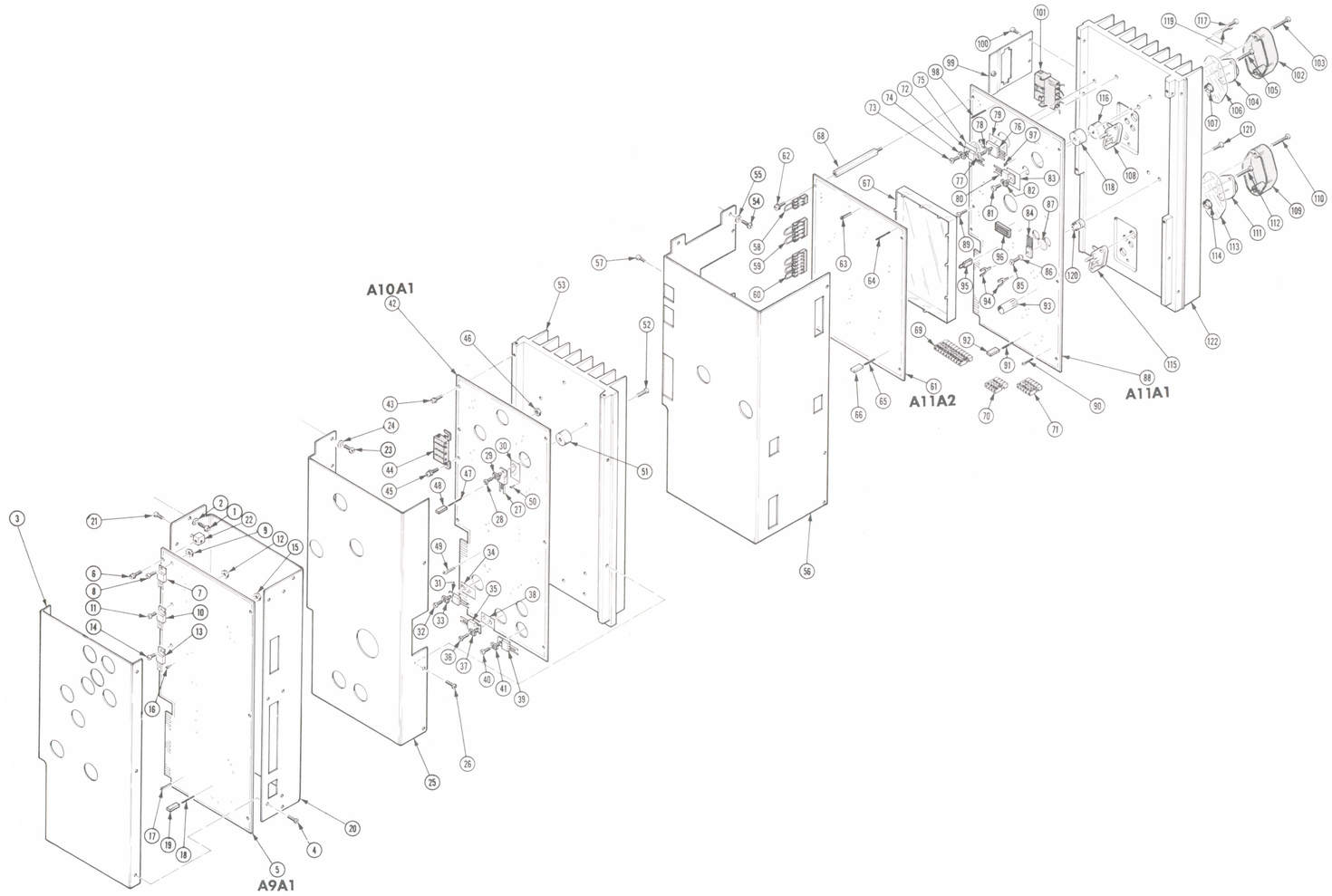
A10A1
A9A1
A11A2
A11A1

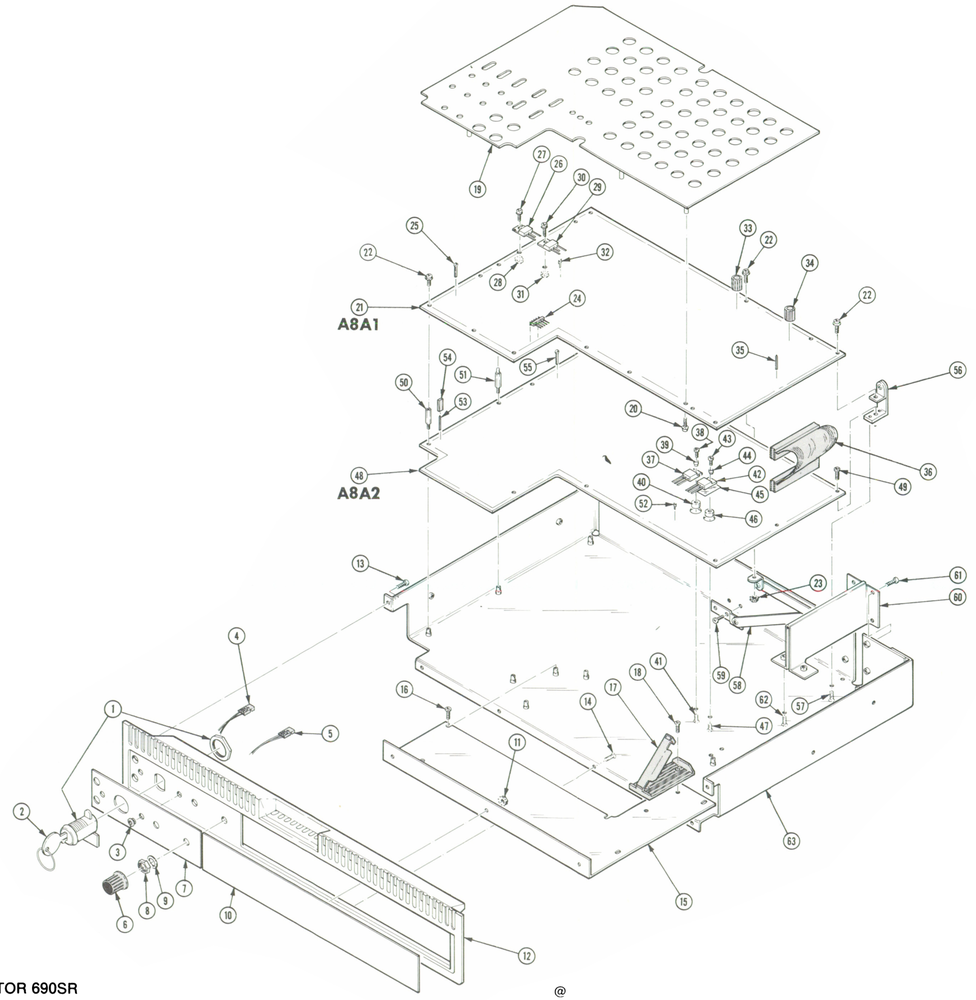

TELEVISION COLOR MONITOR 690SR

@

Fig. & Index No.	Tektronix Part No.	Serial/Model No. Eff	Dscont	Qty	1 2 3 4 5	Name & Description	Mfr Code	Mfr Part Number
4-	----- -----			1		CKT BOARD ASSY:CONTROL DRAWER(SEE A8 REPL)		
-1	105-0916-00			1		.LOCK,RIM:	81741	1974-US14
-2	214-3292-00			4		.KEY LOCK:	81741	#KA 1289
-3	352-0451-00			1		.HOLDER,LENS:0.125 ID,PLASTIC	80009	352-0451-00
-4	----- -----			1		.WIRE SET,ELEC:(SEE A8DS618 REPL)		
-5	----- -----			1		.WIRE SET,ELEC:(SEE A8DS619 REPL)		
-6	366-0497-00			2		.KNOB:GY,0.127 ID X 0.706 OD	80009	366-0497-00
	213-0153-00			2		..SETSCREW:5-40 X 0.125,STL BK OXD,HEX	000CY	ORD BY DESCR
-7	333-2607-00			1		.PANEL,FRONT:LEFT	80009	333-2607-00
						.**********(ATTACHING PARTS)**********		
-8	210-0583-00			2		.NUT,PLAIN,HEX:0.25-32 X 0.312 INCH,BRS	73743	2X20317-402
-9	210-0940-00			2		.WASHER,FLAT:0.25 ID X 0.375 INCH OD,STL	79807	ORD BY DESCR
						.**********(END ATTACHING PARTS)**********		
-10	333-2608-00			1		PANEL,FRONT:BLANK(NOT INCLUDED W/A8)	80009	333-2608-00
						**********(ATTACHING PARTS)**********		
-11	210-0586-00			3		NUT,PL,ASSEM WA:4-40 X 0.25,STL,CD PL	78189	211-041800-00
						**********(END ATTACHING PARTS)**********		
-12	386-4591-00			1		DRAWER,FRONT:POLYCARBONATE	80009	386-4591-00
						**********(ATTACHING PARTS)**********		
-13	211-0007-00			2		SCREW,MACHINE:4-40 X 0.188,PNH STL,CD PL	83385	ORD BY DESCR
-14	211-0105-00			4		SCREW,MACHINE:4-40 X 0.188,100 DEG,FLH ST	83385	ORD BY DESCR
						**********(END ATTACHING PARTS)**********		
-15	407-2777-00			1		BRACKET,PANEL:ALUMINUM	80009	407-2777-00
						**********(ATTACHING PARTS)**********		
-16	211-0207-00			5		SCR,ASSEM WSHR:4-40 X 0.312 DOUBLE SEMS	83385	ORD BY DESCR
						**********(END ATTACHING PARTS)**********		
-17	343-1023-00			1		CLAMP,CABLE:FLAT CABLE,2.0 W	06383	FCM2-S6C14
						**********(ATTACHING PARTS)**********		
-18	211-0101-00			2		SCREW,MACHINE:4-40 X 0.25,FLH,100 DEG,STL	83385	ORD BY DESCR
						**********(END ATTACHING PARTS)**********		
-19	333-2801-00			1		PANEL,FRONT:	80009	333-2801-00
						**********(ATTACHING PARTS)**********		
-20	211-0207-00			7		SCR,ASSEM WSHR:4-40 X 0.312 DOUBLE SEMS	83385	ORD BY DESCR
						**********(END ATTACHING PARTS)**********		
-21	----- -----			1		CKT BOARD ASSY:CONVERGENCE CONTROL		
	----- -----			-		(SEE A8A1 REPL)		
						**********(ATTACHING PARTS)**********		
-22	211-0207-00			8		SCR,ASSEM WSHR:4-40 X 0.312 DOUBLE SEMS	83385	ORD BY DESCR
-23	210-0586-00			1		NUT,PL,ASSEM WA:4-40 X 0.25,STL,CD PL	78189	211-041800-00
						**********(END ATTACHING PARTS)**********		
	----- -----			-		CKT BOARD ASSY INCLUDES:		
-24	131-1425-00			1		.TERM SET,PIN:(36) 0.025 SQ RTANG,0.150L	22526	65521-136
-25	214-0579-00			44		.TERM,TEST POINT:BRS CD PL	80009	214-0579-00
-26	----- -----			1		.MICROCIRCUIT:(SEE A8A1U400 REPL)		
						.**********(ATTACHING PARTS)**********		
-27	211-0008-00			1		.SCREW,MACHINE:4-40 X 0.250,PNH,STL,POZ	83385	ORD BY DESCR
-28	210-0586-00			1		.NUT,PL,ASSEM WA:4-40 X 0.25,STL,CD PL	78189	211-041800-00
						.**********(END ATTACHING PARTS)**********		
-29	----- -----			1		.MICROCIRCUIT:(SEE A8A1U410 REPL)		
						.**********(ATTACHING PARTS)**********		
-30	211-0008-00			1		.SCREW,MACHINE:4-40 X 0.250,PNH,STL,POZ	83385	ORD BY DESCR
-31	210-0586-00			1		.NUT,PL,ASSEM WA:4-40 X 0.25,STL,CD PL	78189	211-041800-00
						.**********(END ATTACHING PARTS)**********		
-32	131-2594-00			6		.TERMINAL,STUD:0.156 L,CKT BD,BRASS	71279	140-1385-05
-33	366-1876-00			26		.KNOB:SIL GY,0.127 ID X 0.384 X 0	80009	366-1876-00
	214-1771-00			26		.PIN,KNOB INDEX:0.3 X 0.029 OD,SST	80009	214-1771-00
-34	366-1875-00			30		.KNOB:GRAY,0.127 ID X 0.384 X 0.3	80009	366-1875-00
	214-1771-00			30		..PIN,KNOB INDEX:0.3 X 0.029 OD,SST	80009	214-1771-00
-35	131-0608-00			74		.TERMINAL,PIN:0.365 L X 0.025 PH BRZ GOLD	22526	48283-036
-36	----- -----			1		.CABLE ASSY:(SEE A8J270 REPL)		
-37	----- -----			1		.MICROCIRCUIT:(SEE A8U590 REPL)		
						.**********(ATTACHING PARTS)**********		

Fig. & Index No.	Tektronix Part No.	Serial/Model No. Eff	Dscont	Qty	1 2 3 4 5 Name & Description	Mfr Code	Mfr Part Number
4-38	211-0007-00			1	.SCREW,MACHINE:4-40 X 0.188,PNH STL,CD PL	83385	ORD BY DESCR
-39	210-1178-00			1	.WASHER,SHLDR:U/W T0-220 TRANSISTOR	49671	DF137A
-40	214-3174-00			1	.HEAT SINK,XSTR:TO-220,AL	80009	214-3174-00
-41	211-0105-00			1	.SCREW,MACHINE:4-40 X 0.188,100 DEG,FLH ST	83385	ORD BY DESCR
					.**********(END ATTACHING PARTS)*********		
-42	----- -----			1	.MICROCIRCUIT:(SEE A8U593 REPL)		
					.**********(ATTACHING PARTS)**********		
-43	211-0007-00			1	.SCREW,MACHINE:4-40 X 0.188,PNH STL,CD PL	83385	ORD BY DESCR
-44	210-1178-00			1	.WASHER,SHLDR:U/W T0-220 TRANSISTOR	49671	DF137A
-45	342-0563-00			1	.INSULATOR,PLATE:TRANSISTOR,FIBERGLAS	18565	69-11-8805-1674
-46	214-3174-00			1	.HEAT SINK,XSTR:TO-220,AL	80009	214-3174-00
-47	211-0105-00			1	.SCREW,MACHINE:4-40 X 0.188,100 DEG,FLH ST	83385	ORD BY DESCR
					.**********(END ATTACHING PARTS)*********		
-48	----- -----			1	.CKT BOARD ASSY:CONVERGENCE GENERATOR		
	----- -----			-	.(SEE A8A2 REPL)		
					.**********(ATTACHING PARTS)**********		
-49	211-0207-00			2	.SCR,ASSEM WSHR:4-40 X 0.312 DOUBLE SEMS	83385	ORD BY DESCR
-50	129-0811-00			5	.SPACER,POST:0.762,W/4-40 EXT THD ONE EN	80009	129-0811-00
-51	214-3181-00			1	.PIN GUIDE:0.188 HEX ID X 0.187 L	80009	214-3181-00
					.**********(END ATTACHING PARTS)*********		
	----- -----			-	.CKT BOARD ASSY INCLUDES:		
-52	131-2594-00			6	..TERMINAL,STUD:0.156 L,CKT BD,BRASS	71279	140-1385-05
-53	131-0608-00			86	..TERMINAL,PIN:0.365 L X 0.025 PH BRZ GOLD	22526	48283-036
-54	131-0993-00			6	..BUS,CONDUCTOR:2 WIRE BLACK	00779	850100-01
-55	214-0579-00			48	..TERM,TEST POINT:BRS CD PL	80009	214-0579-00
-56	214-3051-00			2	.HINGE,CKT BOARD:	80009	214-3051-00
					.**********(ATTACHING PARTS)**********		
-57	211-0105-00			4	.SCREW,MACHINE:4-40 X 0.188,100 DEG,FLH ST	83385	ORD BY DESCR
					.**********(END ATTACHING PARTS)*********		
-58	214-3233-00			1	.BRACE,CKT BD:	80009	214-3233-00
					.**********(ATTACHING PARTS)**********		
-59	211-0007-00			2	.SCREW,MACHINE:4-40 X 0.188,PNH STL,CD PL	83385	ORD BY DESCR
					.**********(END ATTACHING PARTS)*********		
	346-0128-00	B010125		1	STRAP,TIE DOWN:0.1W X 8.0" LONG,NYLON	06383	PLT2M
-60	343-0947-00	B010100	B010159	1	RETAINER,CABLE:ALUMINUM	80009	343-0947-00
	343-0947-01	B010160		1	RETAINER,CABLE:ALUMINUM	80009	343-0947-01
					**********(ATTACHING PARTS)**********		
-61	211-0008-00	B010100	B010159	4	SCREW,MACHINE:4-40 X 0.250,PNH,STL,POZ	83385	ORD BY DESCR
-62	211-0101-00	B010100	B010159	2	SCREW,MACHINE:4-40 X 0.25,FLH,100 DEG,STL	83385	ORD BY DESCR
	210-0586-00	B010160		2	NUT,PL,ASSEM WA:4-40 X 0.25,STL,CD PL	78189	211-041800-00
					**********(END ATTACHING PARTS)*********		
-63	436-0153-00	B010100	B010159	1	DRAWER,CKT BD:	80009	436-0153-00
	436-0153-01	B010160		1	DRAWER,CKT BD:	80009	436-0153-01

Fig. & Index No.	Tektronix Part No.	Serial/Model No. Eff	Dscont	Qty	1 2 3 4 5 Name & Description	Mfr Code	Mfr Part Number
5-1	----- -----			1	KNOB:(SEE S101 REPL)		
-2	348-0516-00			1	GROMMET,PLASTIC:BLACK,ROUND,0.188 ID	28520	SB312-3
-3	384-1613-00			1	EXTENSION SHAFT:17.542 L X 0.188 DIA,SST	80009	384-1613-00
					**********(ATTACHING PARTS)**********		
-4	214-3247-00			1	BALL JOINT:	80009	214-3247-00
-5	210-0457-00			1	NUT,PL,ASSEM WA:6-32 X 0.312,STL CD PL	83385	ORD BY DESCR
					**********(END ATTACHING PARTS)**********		
-6	----- -----			1	KNOB:(SEE S100 REPL)		
-7	348-0516-00			1	GROMMET,PLASTIC:BLACK,ROUND,0.188 ID	28520	SB312-3
-8	384-1612-00			1	EXTENSION SHAFT:19.1 L X 0.188 DIA,SST	80009	384-1612-00
					**********(ATTACHING PARTS)**********		
-9	214-3247-00			1	BALL JOINT:	80009	214-3247-00
-10	210-0457-00			1	NUT,PL,ASSEM WA:6-32 X 0.312,STL CD PL	83385	ORD BY DESCR
					**********(END ATTACHING PARTS)**********		
-11	407-2650-00	B010100	B010160	1	BRACKET,CMPNT:SWITCH ROD,AL	80009	407-2650-00
	407-2650-01	B010161		1	BRACKET,CMPNT:SWITCH ROD,AL	80009	407-2650-01
-12	386-4587-00	B010100	B010160	1	SUPPORT,SW ROD:ALUMINUM	80009	386-4587-00
	386-4587-01	B010161		1	SUPPORT,SW ROD:ALUMINUM	80009	386-4587-01
					**********(ATTACHING PARTS)**********		
-13	211-0008-00			2	SCREW,MACHINE:4-40 X 0.250,PNH,STL,POZ	83385	ORD BY DESCR
-14	210-0994-00			2	WASHER,FLAT:0.125 ID X 0.25" OD,STL	86928	5702-201-20
-15	211-0538-00			2	SCREW,MACHINE:6-32 X 0.312"100 DEG,FLH	83385	ORD BY DESCR
					**********(END ATTACHING PARTS)**********		
-16	407-2427-00			2	BRACKET,ANGLE:CRT,STEEL	80009	407-2427-00
					**********(ATTACHING PARTS)**********		
-17	213-0883-00			2	SCREW,SHOULDER:0.25 X 0.500	83294	ORD BY DESCR
-18	210-3092-00			2	.WASHER,FLAT:0.265 X 0.09 AL,0.625	80009	210-3092-00
-19	212-0588-00			4	SCREW,CAP.:10-32 X 0.375,SCH,SST	000DF	ORD BY DESCR
-20	210-0805-00			4	WASHER,FLAT:0.204 ID X 0.438 INCH OD	12327	ORD BY DESCR
					**********(END ATTACHING PARTS)**********		
-21	426-1683-00			1	FRAME SECT,MON:LEFT	80009	426-1683-00
					**********(ATTACHING PARTS)**********		
-22	212-0588-00			4	SCREW,CAP.:10-32 X 0.375,SCH,SST	000DF	ORD BY DESCR
-23	210-0805-00			4	WASHER,FLAT:0.204 ID X 0.438 INCH OD	12327	ORD BY DESCR
					**********(END ATTACHING PARTS)**********		
-24	407-2663-00	B010100	B010160	1	BRACKET,ANGLE:SLIDE,AL	80009	407-2663-00
	407-2663-00	B010161		1	BRACKET,ANGLE:SLIDE,AL	80009	407-2663-00
					**********(ATTACHING PARTS)**********		
-25	211-0008-00	B010100	B010160	2	SCREW,MACHINE:4-40 X 0.250,PNH,STL,POZ	83385	ORD BY DESCR
	212-0001-00	B010161		1	SCREW,MACHINE:8-32 X 0.250 INCH,PNH STL	77250	ORD BY DESCR
					**********(END ATTACHING PARTS)**********		
-26	351-0682-00	B010100	B010155	2	SLIDE,DWR EXT:14.0 L X 1.391		
	351-0682-01	B010156		2	SLIDE,DWR EXT:16.0 L X 1.391		
					(ATTACHING PARTS FOR LEFT SIDE)		
					**********(ATTACHING PARTS)**********		
-27	210-0586-00			2	NUT,PL,ASSEM WA:4-40 X 0.25,STL,CD PL	78189	211-041800-00
					(ATTACHING PARTS FOR RIGHT SIDE)		
-28	210-0586-00			1	NUT,PL,ASSEM WA:4-40 X 0.25,STL,CD PL	78189	211-041800-00
-29	361-1129-00	B010100	B010160	1	SPACER,SLEEVE:0.1 L X 0.116 ID,ALUMINUM	80009	361-1129-00
-30	210-0586-00			1	NUT,PL,ASSEM WA:4-40 X 0.25,STL,CD PL	78189	211-041800-00
-31	361-1089-00			1	SPACER,SLEEVE:0.2 L X 0.116 ID,AL	80009	361-1089-00
					**********(END ATTACHING PARTS)**********		
-32	407-2812-00			1	BRACKET,SUPPORT:CABLE,AL	80009	407-2812-00
-33	386-4726-00			1	SUPPORT,CABLE:ALUMINUM		
					**********(ATTACHING PARTS)**********		
-34	214-3283-00			1	PIN,GRVD,HDLS:2.425 L X 0.125 DIA,SST	80009	214-3283-00
-35	354-0163-00			2	RING,RETAINING:TRUARC,CAD PLATE	79136	5133-12MD
-36	211-0101-00			2	SCREW,MACHINE:4-40 X 0.25,FLH,100 DEG,STL	83385	ORD BY DESCR
-37	210-1160-00			1	WASHER,FLAT:0.129 ID X 0.031 THK,TEFLON	86928	5612-32-31
					**********(END ATTACHING PARTS)**********		
-38	255-0806-00			1	PLASTIC CHANNEL:12.75 X 0.2 X 0.155,NYLON	83330	ORD BY DESCR
-39	407-2419-00	B010100	B010114	1	BRKT,SW ADAPTER:STEEL	80009	407-2419-00

Fig. & Index No.	Tektronix Part No.	Serial/Model No. Eff	Dscont	Qty	1 2 3 4 5 Name & Description	Mfr Code	Mfr Part Number
5-40	220-0897-00	B010100	B010114	2	NUT BAR:2.5 L X 0.375 X 0.125	80009	220-0897-00
	220-0897-00	B010115		1	NUT BAR:2.5 L X 0.375 X 0.125	80009	220-0897-00
					**********(ATTACHING PARTS)**********		
-41	211-0538-00			4	SCREW,MACHINE:6-32 X 0.312"100 DEG,FLH	83385	ORD BY DESCR
					**********(END ATTACHING PARTS)**********		
-42	103-0218-00	B010100	B010114	1	ADPTR,SW ACTR:POWER	80009	103-0219-00
					**********(ATTACHING PARTS)**********		
-43	211-0012-00	B010100	B010114	1	SCREW,MACHINE:4-40 X 0.375,PNH STL CD PL	83385	ORD BY DESCR
-44	210-0949-00			1	WASHER,FLAT:0.141 ID X 0.50 INCH OD,BRS	12327	ORD BY DESCR
-45	210-1329-00	B010100	B010114	1	WASHER,SHLDR:0.125 ID X 0.093 THK	80009	210-1329-00
-46	210-0586-00	B010100	B010114	1	NUT,PL,ASSEM WA:4-40 X 0.25,STL,CD PL	78189	211-041800-00
					**********(END ATTACHING PARTS)**********		
-47	105-0886-00	B010100	B010114	1	ACTUATOR,SWITCH:ROCKER	80009	105-0886-00
					**********(ATTACHING PARTS)**********		
-48	210-0008-00	B010100	B010114	1	WASHER,LOCK:INTL,0.02 THK	78189	1208-00-00-0541C
-49	210-0994-00	B010100	B010114	1	WASHER,FLAT:0.125 ID X 0.25" OD,STL	86928	5702-201-20
					**********(END ATTACHING PARTS)**********		
-50	214-3248-00	B010100	B010114	1	SPRING,FLAT:2.125 X 0.375 W X 0.012	80009	214-3248-00
					**********(ATTACHING PARTS)**********		
-51	211-0005-00	B010100	B010114	1	SCREW,MACHINE:4-40 X 0.125 INCH,PNH STL	83385	ORD BY DESCR
					**********(END ATTACHING PARTS)**********		
-52	103-0219-00	B010100	B010114	1	ADPTR,SW ACTR:DEGAUSS	80009	103-0219-00
					**********(ATTACHING PARTS)**********		
-53	211-0012-00	B010100	B010114	1	SCREW,MACHINE:4-40 X 0.375,PNH STL CD PL	83385	ORD BY DESCR
-54	210-0949-00			1	WASHER,FLAT:0.141 ID X 0.50 INCH OD,BRS	12327	ORD BY DESCR
-55	210-1329-00	B010100	B010114	1	WASHER,SHLDR:0.125 ID X 0.093 THK	80009	210-1329-00
-56	210-0586-00	B010100	B010114	1	NUT,PL,ASSEM WA:4-40 X 0.25,STL,CD PL	78189	211-041800-00
					**********(END ATTACHING PARTS)**********		
-57	105-0886-00	B010100	B010114	1	ACTUATOR,SWITCH:ROCKER	80009	105-0886-00
					**********(ATTACHING PARTS)**********		
-58	211-0008-00	B010100	B010114	1	SCREW,MACHINE:4-40 X 0.250,PNH,STL,POZ	83385	ORD BY DESCR
-59	210-0994-00			1	WASHER,FLAT:0.125 ID X 0.25" OD,STL	86928	5702-201-20
					**********(END ATTACHING PARTS)**********		
-60	378-2040-00	B010100	B010135	1	GRILLE,PLASTIC:REAR,LOWER LEFT	80009	378-2040-00
	378-2040-02	B010136		1	GRILLE,PLASTIC:REAR,LOWER LEFT	80009	378-2040-02
-61	378-2051-00	B010100	B010135	1	GRILLE,PLASTIC:REAR,LOWER RIGHT	80009	378-2051-00
	378-2051-01	B010136		1	GRILLE,PLASTIC:REAR,LOWER RIGHT	80009	378-2051-01
					**********(ATTACHING PARTS)**********		
-62	213-0813-00			8	SCREW,TPG,TR:4-20,0.312 L,PLASTITE	93907	ORD BY DESCR
					**********(END ATTACHING PARTS)**********		
-63	426-1855-00	B010100	B010179	1	FRAME ASSY,MON:BOTTOM	80009	426-1855-00
	426-1855-01	B010180		1	FRAME ASSY,MON:BOTTOM	80009	426-1855-01
	407-2983-00	B010161		1	BRACKET,ANGLE:DRAWER SUPPORT,AL	80009	407-2983-00
					**********(ATTACHING PARTS)**********		
	211-0038-00	B010161		2	SCREW,MACHINE:4-40 X 0.312,FLH,100 DEG	83385	ORD BY DESCR
	220-0785-00	B010161		1	NUT BLOCK:(2)4-40 X 0.625 INCH LONG	80009	220-0785-00
					**********(END ATTACHING PARTS)**********		
	334-4861-00	B010180			MARDER,IDENT:MKT TV RATE	80009	334-4861-00
	344-4862-00	B010180			MARDER,IDENT:MKT TV HORIZONAL RATE	80009	334-4862-00
-64	407-2907-00	B010115		1	BRKT,SW ADPTR:ALUMINUM	80009	407-2907-00
					**********(ATTACHING PARTS)**********		
-65	211-0538-00	B010115		4	SCREW,MACHINE:6-32 X 0.312"100 DEG,FLH	83385	ORD BY DESCR
					**********(END ATTACHING PARTS)**********		
-66	220-0897-00	B010115		1	NUT BAR:2.5 L X 0.375 X 0.125	80009	220-0897-00
-67	214-1280-00	B010115	B010124	1	SPRING,HLCPS:0.14 OD X 1.126"L,0.16"DIA	80009	214-1280-00
	214-1521-00	B010125		1	PIN,SPRING:0.0L X 0.103 OD,CS BLK OIL		
-68	220-0866-00	B010115		1	NUT BLOCK:1.68 L X 0.48 W,0.062 THK	80009	220-0866-00
					**********(ATTACHING PARTS)**********		
-69	211-0038-00	B010115		2	SCREW,MACHINE:4-40 X 0.312,FLH,100 DEG	83385	ORD BY DESCR
					**********(END ATTACHING PARTS)**********		
-70	103-0238-00	B010115		1	ADPTR,SW ACTR:DEGAUSS	80009	103-0238-00
					**********(ATTACHING PARTS)**********		

Fig. & Index No.	Tektronix Part No.	Serial/Model No. Eff	Dscont	Qty	1 2 3 4 5	Name & Description	Mfr Code	Mfr Part Number
5-71	211-0661-00	B010115		1		SCREW,MACHINE:4-40 X 0.25 INCH,PNH,STL	78189	ORD BY DESCR
-72	210-0949-00	B010115		1		WASHER,FLAT:0.141 ID X 0.50 INCH OD,BRS	12327	ORD BY DESCR
-73	210-1098-00	B010115		2		WASHER,FLAT:0.219 ID X 0.01 THK,NYL	80009	210-1098-00
						**********(END ATTACHING PARTS)**********		
-74	105-0931-00	B010115		1		ACTUATOR,SWITCH:ROCKER	80009	105-0931-00
						**********(ATTACHING PARTS)**********		
-75	213-0838-00	B010115		1		SCREW,TPG,TR:4-20 X 0.5 L,PNH,STL,CD PL	01536	ORD BY DESCR
-76	210-0994-00	B010115		1		WASHER,FLAT:0.125 ID X 0.25" OD,STL	86928	5702-201-20
-77	166-0025-00	B010115		1		SPACER,SLEEVE:0.25 L X 0.125 ID,AL	71590	P07608-51
-78	214-1261-00	B010115		2		SPRING,HLCPS:0.235 OD X 0.78 LONG	80009	214-1261-00
						**********(END ATTACHING PARTS)**********		
-79	103-0237-00	B010115		1		ADPTR,SW ACTR:POWER	80009	103-0237-00
						**********(ATTACHING PARTS)**********		
-80	211-0661-00	B010115		1		SCREW,MACHINE:4-40 X 0.25 INCH,PNH,STL	78189	ORD BY DESCR
-81	210-0949-00	B010115		1		WASHER,FLAT:0.141 ID X 0.50 INCH OD,BRS	12327	ORD BY DESCR
-82	210-1098-00	B010115		1		WASHER,FLAT:0.219 ID X 0.01 THK,NYL	80009	210-1098-00
						**********(END ATTACHING PARTS)**********		
-83	210-3057-00	B010115		1		WASHER,FLAT:0.170 ID X 0.375 OD	95987	NW8-3753

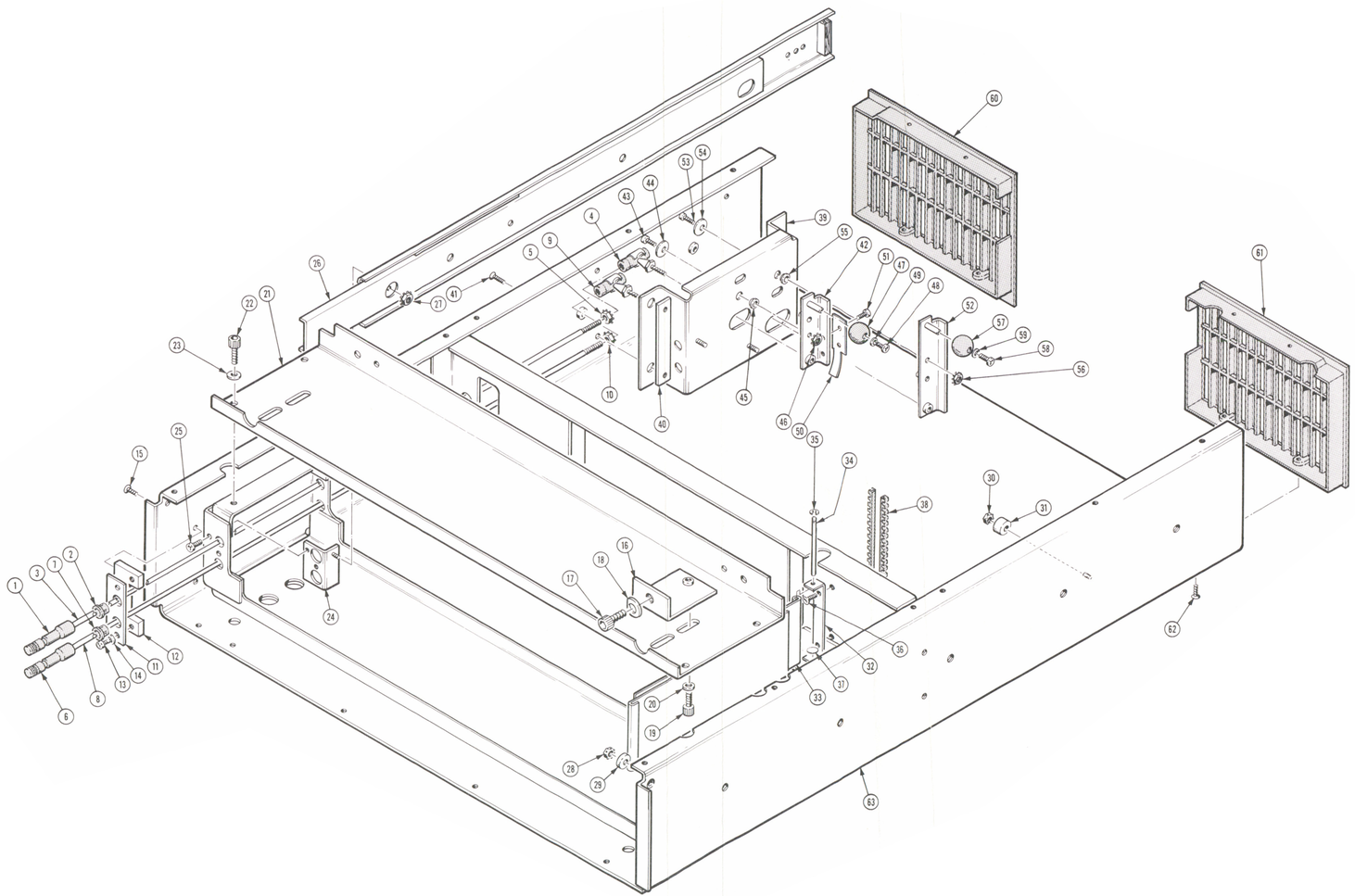

B010115 AND UP

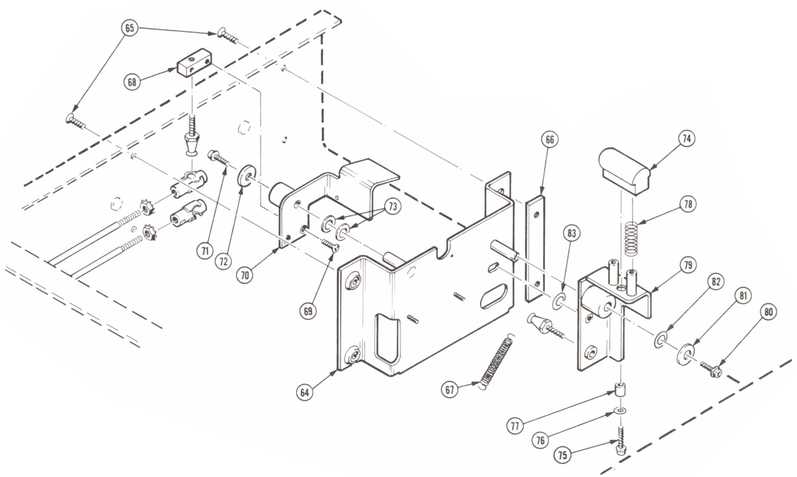

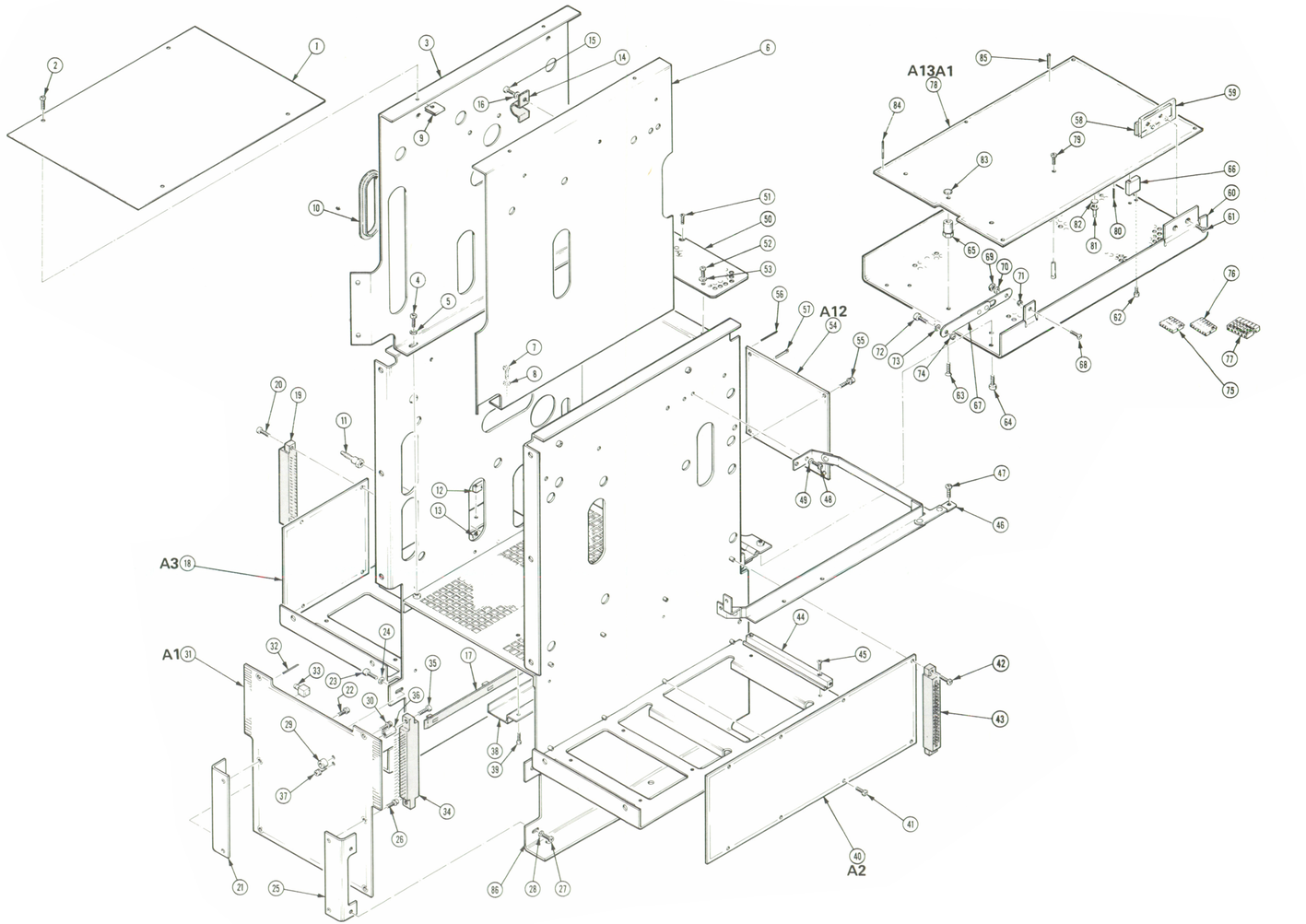
A13A1
A12
A3
A1
A2

Fig. & Index No.	Tektronix Part No.	Serial/Model No. Eff	Dscont	Qty	1 2 3 4 5 Name & Description	Mfr Code	Mfr Part Number
6-1	337-2861-00			1	SHIELD,ELEC:CRT NECK	80009	337-2861-00
					••••••••••••••(ATTACHING PARTS)••••••••••••		
-2	211-0510-00			4	SCREW,MACHINE:6-32 X 0.375,PNH,STL,CD PL	83385	ORD BY DESCR
					••••••••••••(END ATTACHING PARTS)•••••••••		
-3	337-2711-00			1	SHIELD,ELEC:CKT BOARD	80009	337-2711-00
					••••••••••••••(ATTACHING PARTS)••••••••••••		
-4	211-0008-00	B010100	B010130	5	SCREW,MACHINE:4-40 X 0.250,PNH,STL,POZ	83385	ORD BY DESCR
	211-0661-00	B010131		5	SCREW,MACHINE:4-40 X 0.25 INCH,PNH,STL	78189	ORD BY DESCR
-5	210-0994-00	B010100	B010130	3	WASHER,FLAT:0.125 ID X 0.25" OD,STL	86928	5702-201-20
					••••••••••••(END ATTACHING PARTS)•••••••••		
-6	337-2710-00			1	SHIELD,ELEC:CKT BOARD	80009	337-2710-00
					••••••••••••••(ATTACHING PARTS)••••••••••••		
-7	211-0008-00	B010100	B010130	5	SCREW,MACHINE:4-40 X 0.250,PNH,STL,POZ	83385	ORD BY DESCR
	211-0661-00	B010131		5	SCREW,MACHINE:4-40 X 0.25 INCH,PNH,STL	78189	ORD BY DESCR
-8	210-0994-00	B010100	B010130	3	WASHER,FLAT:0.125 ID X 0.25" OD,STL	86928	5702-201-20
					••••••••••••(END ATTACHING PARTS)•••••••••		
-9	220-0625-00			8	NUT,SHEET SPR:6-32 THD,STL	78553	C8090-632-24
-10	348-0717-00			7	GROMMET,PLASTIC:BLACK,OVAL,0.72 ID	80009	348-0717-00
-11	134-0013-00			1	PLUG,TIP:BANANA,6-32 INT THD END	74970	108-753-17
-12	220-0866-00			1	NUT BLOCK:1.68 L X 0.48 W,0.062 THK	80009	220-0866-00
					••••••••••••••(ATTACHING PARTS)••••••••••••		
-13	211-0101-00			2	SCREW,MACHINE:4-40 X 0.25,FLH,100 DEG,STL	83385	ORD BY DESCR
					••••••••••••(END ATTACHING PARTS)•••••••••		
-14	346-0191-00			1	STRAP,RETAINING:CABLE,NYLON	95987	FXC-5
					••••••••••••••(ATTACHING PARTS)••••••••••••		
-15	211-0504-00			1	SCREW,MACHINE:6-32 X 0.250,PNH STL,CD PL	83385	ORD BY DESCR
-16	210-0802-00	B010100	B010130	1	WASHER,FLAT:0.15 ID X 0.312 INCH OD	12327	ORD BY DESCR
	210-0804-00	B010131		1	WASHER,FLAT:0.17 ID X 0.375 INCH OD,STL	12327	ORD BY DESCR
					••••••••••••(END ATTACHING PARTS)•••••••••		
-17	351-0058-00			2	SLIDE,GUIDE:8.875 L,CUT TO 4.375 L	80009	351-0058-00
-18	----- -----			1	CKT BOARD ASSY:LEFT INTERCONNECT		
	----- -----			-	(SEE A3 REPL)		
-19	131-2535-00			3	CONN,RCPT,ELEC:CKT BD,18/36 CONT	00779	2-530657-5
					••••••••••••••(ATTACHING PARTS)••••••••••••		
-20	211-0014-00			4	SCREW,MACHINE:4-40 X 0.50 INCH,PNH STL	83385	ORD BY DESCR
					••••••••••••(END ATTACHING PARTS)•••••••••		
-21	407-2648-00			1	BRACKET,ANGLE:CKT BOARD,LEFT AL	80009	407-2648-00
					••••••••••••••(ATTACHING PARTS)••••••••••••		
-22	211-0207-00	B010100	B010130	2	SCR,ASSEM WSHR:4-40 X 0.312 DOUBLE SEMS	83385	ORD BY DESCR
	211-0661-00	B010131		2	SCREW,MACHINE:4-40 X 0.25 INCH,PNH,STL	78189	ORD BY DESCR
-23	211-0008-00			2	SCREW,MACHINE:4-40 X 0.250,PNH,STL,POZ	83385	ORD BY DESCR
-24	210-0994-00			2	WASHER,FLAT:0.125 ID X 0.25" OD,STL	86928	5702-201-20
					••••••••••••(END ATTACHING PARTS)•••••••••		
-25	407-2420-00			1	BRACKET,ANGLE:SWITCH ACTUATOR,STEEL	80009	407-2420-00
					••••••••••••••(ATTACHING PARTS)••••••••••••		
-26	211-0207-00	B010100	B010130	2	SCR,ASSEM WSHR:4-40 X 0.312 DOUBLE SEMS	83385	ORD BY DESCR
	211-0661-00	B010131		2	SCREW,MACHINE:4-40 X 0.25 INCH,PNH,STL	78189	ORD BY DESCR
-27	211-0008-00			4	SCREW,MACHINE:4-40 X 0.250,PNH,STL,POZ	83385	ORD BY DESCR
-28	210-0994-00			4	WASHER,FLAT:0.125 ID X 0.25" OD,STL	86928	5702-201-20
					••••••••••••(END ATTACHING PARTS)•••••••••		
-29	385-0109-00			2	SPACER,POST:0.312 L W/4-40 THD THRU,NYL	80009	385-0109-00
					••••••••••••••(ATTACHING PARTS)••••••••••••		
-30	211-0207-00	B010100	B010130	2	SCR,ASSEM WSHR:4-40 X 0.312 DOUBLE SEMS	83385	ORD BY DESCR
	211-0661-00	B010131		2	SCREW,MACHINE:4-40 X 0.25 INCH,PNH,STL	78189	ORD BY DESCR
					••••••••••••(END ATTACHING PARTS)•••••••••		
-31	----- -----			1	CKT BOARD ASSY:CENTER INTERCONNECT		
	----- -----			-	(SEE A1 REPL)		
-32	131-0608-00			99	.TERMINAL,PIN:0.365 L X 0.025 PH BRZ GOLD	22526	48283-036
-33	131-0265-00			3	.CONN,RCPT,ELEC:MINTR,CKT BD MTD,FEM,RTNG	98291	51-053-0000
	----- -----			-	.(J231,J431,J631)		
-34	131-2474-00			1	.CONN,RCPT,ELEC:CKT BD,18/36 CONT,FEMALE	05574	2VH18/1AMD5
					.••••••••••••(ATTACHING PARTS)••••••••••••		
-35	211-0014-00			2	.SCREW,MACHINE:4-40 X 0.50 INCH,PNH STL	83385	ORD BY DESCR
-36	129-0308-00			2	.POST,ELEC-MECH:HEX.,0.25 X 0.465 INCH LON	80009	129-0308-00
-37	211-0116-00			2	.SCR,ASSEM WSHR:4-40 X 0.312 INCH,PNH BRS	83385	ORD BY DESCR
					.••••••••••(END ATTACHING PARTS)•••••••••		

Fig. & Index No.	Tektronix Part No.	Serial/Model No. Eff	Dscont	Qty	1 2 3 4 5 Name & Description	Mfr Code	Mfr Part Number
6-38	352-0578-00			1	HOLDER,ELEC CA:STEEL	80009	352-0578-00
					**********(ATTACHING PARTS)**********		
-39	211-0008-00			2	SCREW,MACHINE:4-40 X 0.250,PNH,STL,POZ	83385	ORD BY DESCR
					**********(END ATTACHING PARTS)**********		
-40	----- -----			1	CKT BOARD ASSY:RIGHT INTERCONNECT		
	----- -----			-	(SEE A2 REPL)		
					**********(ATTACHING PARTS)**********		
-41	211-0207-00	B010100	B010130	2	SCR,ASSEM WSHR:4-40 X 0.312 DOUBLE SEMS	83385	ORD BY DESCR
	211-0661-00	B010131		2	SCREW,MACHINE:4-40 X 0.25 INCH,PNH,STL	78189	ORD BY DESCR
-42	211-0014-00			6	SCREW,MACHINE:4-40 X 0.50 INCH,PNH STL	83385	ORD BY DESCR
					**********(END ATTACHING PARTS)**********		
-43	131-2535-00			4	CONN,RCPT,ELEC:CKT BD,18/36 CONT	00779	2-530657-5
-44	351-0616-00			5	GUIDE,CKT BD:ALUMINUM,4.55 L	80009	351-0616-00
					**********(ATTACHING PARTS)**********		
-45	211-0102-00			10	SCREW,MACHINE:4-40 X 0.50,FLH,100 DEG STL	83385	ORD BY DESCR
					**********(END ATTACHING PARTS)**********		
-46	343-0977-00			1	RETAINER,MODULE:	80009	343-0977-00
					**********(ATTACHING PARTS)**********		
-47	211-0315-00			2	SCR,ASSEM WSHR:4-40 X 0.437 PNH,STL CD PL	000FF	ORD BY DESCR
-48	211-0008-00	B010100	B010130	4	SCREW,MACHINE:4-40 X 0.250,PNH,STL,POZ	83385	ORD BY DESCR
	211-0661-00	B010131		4	SCREW,MACHINE:4-40 X 0.25 INCH,PNH,STL	78189	ORD BY DESCR
-49	210-0994-00	B010100	B010130	4	WASHER,FLAT:0.125 ID X 0.25" OD,STL	86928	5702-201-20
					**********(END ATTACHING PARTS)**********		
-50	105-0903-00			1	CATCH,LATCH:ALUMINUM	80009	105-0903-00
					**********(ATTACHING PARTS)**********		
-51	211-0038-00			1	SCREW,MACHINE:4-40 X 0.312,FLH,100 DEG	83385	ORD BY DESCR
-52	211-0504-00			3	SCREW,MACHINE:6-32 X 0.250,PNH STL,CD PL	83385	ORD BY DESCR
-53	210-0802-00			3	WASHER,FLAT:0.15 ID X 0.312 INCH OD	12327	ORD BY DESCR
					**********(END ATTACHING PARTS)**********		
-54	----- -----			1	CKT BOARD ASSY:CRT SOCKET(SEE A12 REPL)		
					**********(ATTACHING PARTS)**********		
-55	211-0207-00	B010100	B010130	4	SCR,ASSEM WSHR:4-40 X 0.312 DOUBLE SEMS	83385	ORD BY DESCR
	211-0661-00	B010131		4	SCREW,MACHINE:4-40 X 0.25 INCH,PNH,STL	78189	ORD BY DESCR
					**********(END ATTACHING PARTS)**********		
	----- -----			-	CKT BOARD ASSY INCLUDES:		
-56	131-0589-00			13	.TERMINAL,PIN:0.46 L X 0.025 SQ	22526	48283-029
-57	214-0579-00			6	.TERM,TEST POINT:BRS CD PL	80009	214-0579-00
	----- -----			1	CKT BOARD ASSY:VIDEO AMPLIFIER		
	----- -----			-	(SEE A13 REPL)		
-58	214-3176-00			1	.HEAT SINK,XSTR:(3) T0-220,AL	80009	214-3176-00
-59	342-0578-00			1	.INSULATOR,FILM:TRANSISTOR,POLYMIDE	80009	342-0578-00
-60	200-2435-00			1	.COVER,VIDEO AMP:	80009	200-2435-00
					.**********(ATTACHING PARTS)**********		
-61	211-0025-00			2	.SCREW,MACHINE:4-40 X 0.375 100 DEG,FLH ST	83385	ORD BY DESCR
-62	211-0661-00			2	.SCREW,MACHINE:4-40 X 0.25 INCH,PNH,STL	78189	ORD BY DESCR
-63	212-0001-00			3	.SCREW,MACHINE:8-32 X 0.250 INCH,PNH STL	77250	ORD BY DESCR
-64	211-0012-00			2	.SCREW,MACHINE:4-40 X 0.375,PNH STL CD PL	83385	ORD BY DESCR
					.**********(END ATTACHING PARTS)**********		
-65	220-0865-00			3	.NUT,SLEEVE:8-32 THD X 0.375 HEX,AL	80009	220-0865-00
	----- -----			-	.(PART OF A13A1)		
-66	220-0790-00			1	.NUT,BLOCK:0.188 X 0.5 INCH SQUARE	80009	220-0790-00
-67	386-4677-00			1	SUPPORT,DOOR:	80009	386-4677-00
					**********(ATTACHING PARTS)**********		
-68	211-0038-00			1	SCREW,MACHINE:4-40 X 0.312,FLH,100 DEG	83385	ORD BY DESCR
-69	210-0586-00	B010100	B010130	1	NUT,PL,ASSEM WA:4-40 X 0.25,STL,CD PL	78189	211-041800-00
	210-0589-00	B010131		1	NUT,SELF LKG HE:4-40 X 0.250 INCH	13257	22 NM-40
-70	210-0994-00			1	WASHER,FLAT:0.125 ID X 0.25" OD,STL	86928	5702-201-20
-71	210-3091-00			1	WASHER,SHLDR:0.128 ID X 0.08 THK,PLASTIC	80009	210-3091-00
-72	211-0008-00	B010100	B010130	1	SCREW,MACHINE:4-40 X 0.250,PNH,STL,POZ	83385	ORD BY DESCR
	211-0148-01	B010131		1	SCREW,MACHINE:4-40 X 0.312 INCH,PNH,SST	83385	ORD BY DESCR
-73	210-0994-00	B010100	B010130	1	WASHER,FLAT:0.125 ID X 0.25" OD,STL	86928	5702-201-20
	210-0994-00	B010131		2	WASHER,FLAT:0.125 ID X 0.25" OD,STL	86928	5702-201-20
-74	210-3091-00			1	WASHER,SHLDR:0.128 ID X 0.08 THK,PLASTIC	80009	210-3091-00
					**********(END ATTACHING PARTS)**********		

Fig. & Index No.	Tektronix Part No.	Serial/Model No. Eff	Dscont	Qty	1 2 3 4 5 Name & Description	Mfr Code	Mfr Part Number
6-75	198-4377-00			1	WIRE SET,ELEC:	80009	198-4377-00
	352-0202-05			2	.CONN BODY,PL,EL:6 WIRE GREEN	80009	352-0202-05
	276-0541-00			1	SHIELDING BEAD,:	80009	276-0541-00
-76	198-4379-00			1	WIRE SET,ELEC:	80009	198-4379-00
	352-0203-02			2	.CONN BODY,PL,EL:7 WIRE ORANGE	80009	352-0203-02
	276-0541-00			1	SHIELDING BEAD,:	80009	276-0541-00
-77	198-4378-00			1	WIRE SET,ELEC:	80009	198-4378-00
	352-0202-06			2	.CONN BODY,PL,EL:6 WIRE BLUE	80009	352-0202-06
	276-0541-00			1	SHIELDING BEAD,:	80009	276-0541-00
	346-0128-00	B010131		2	STRAP,TIE DOWN:0.1W X 8.0" LONG,NYLON	06383	PLT2M
	346-0032-00			1	STRAP,RTNING:0.075 DIA X 4.0 L,MLD RBR	98159	2859-75-4
	352-0482-00			1	HOLDER,CA,TIE:0.75 SQ,STICKY BACK,PLASTIC	06383	ABMM-A
-78	----- -----			1	CKT BOARD ASSY:VIDEO AMPLIFIER		
	----- -----			-	(SEE A13A1 REPL)		
					**********(ATTACHING PARTS)**********		
-79	211-0207-00			4	SCR,ASSEM WSHR:4-40 X 0.312 DOUBLE SEMS	83385	ORD BY DESCR
					**********(END ATTACHING PARTS)*********		
	----- -----			-	CKT BOARD ASSY INCLUDES:		
-80	131-0608-00			31	.TERMINAL,PIN:0.365 L X 0.025 PH BRZ GOLD	22526	48283-036
-81	131-0391-00			3	.CONNECTOR,RCPT,:50 OHM,COAX,SNAP-ON MALE	98291	51-051-0049
	----- -----			-	.(J230,J430,J630)		
	175-3716-00			1	.CABLE ASSY,RF:75OHM COAX,22.0L 9-2	80009	175-3716-00
	175-3717-00			1	.CABLE ASSY,RF:75OHM COAX,22.0L 9-5	80009	175-3717-00
	175-3718-00			1	.CABLE ASSY,RF:75OHM COAX,22.0L 9-6	80009	175-3718-00
-82	210-1160-00			3	.WASHER,FLAT:0.129 ID X 0.031 THK,TEFLON	86928	5612-32-31
-83	210-0008-00			3	.WASHER,LOCK:INTL,0.02 THK	78189	1208-00-00-0541C
-84	131-0589-00			13	.TERMINAL,PIN:0.46 L X 0.025 SQ	22526	48283-029
-85	214-0579-00			28	.TERM,TEST POINT:BRS CD PL	80009	214-0579-00
-86	426-1854-00			1	FRAME ASSY,MON:REAR	80009	426-1854-00
	210-0201-00			1	TERMINAL,LUG:0.12 ID,LOCKING,BRZ TIN PL	86928	ORD BY DESCR
	210-0586-00			1	NUT,PL,ASSEM WA:4-40 X 0.25,STL,CD PL	78189	211-041800-00
	220-0925-00	B010131		2	NUT,PLAIN,WING:6-32,ZINK ALLOY	83385	ORD BY DESCR
	352-0482-00	B010141		1	HOLDER,CA,TIE:0.75 SQ,STICKY BACK,PLASTIC	06383	ABMM-A

Fig. & Index No.	Tektronix Part No.	Serial/Model No. Eff	Dscont	Qty	1 2 3 4 5 Name & Description	Mfr Code	Mfr Part Number
7-1	200-2593-00			1	COVER,CABINET:TOP AL	80009	200-2593-00
					**********(ATTACHING PARTS)**********		
-2	211-0512-00			2	SCREW,MACHINE:6-32 X 0.50" 100 DEG,FLH ST	83385	ORD BY DESCR
-3	211-0559-00			6	SCREW,MACHINE:6-32 X 0.375"100 DEG,FLH ST	83385	ORD BY DESCR
					**********(END ATTACHING PARTS)**********		
-4	386-4590-00			1	STIFFENER,COVER:ALUMINUM	80009	386-4590-00
					**********(ATTACHING PARTS)**********		
-5	210-0586-00			2	NUT,PL,ASSEM WA:4-40 X 0.25,STL,CD PL	78189	211-041800-00
					**********(END ATTACHING PARTS)**********		
-6	331-0554-00			1	MASK,CRT:PLASTIC	80009	331-0554-00
					**********(ATTACHING PARTS)**********		
-7	211-0538-00			6	SCREW,MACHINE:6-32 X 0.312"100 DEG,FLH	83385	ORD BY DESCR
					**********(END ATTACHING PARTS)**********		
-8	213-0901-00			4	THUMBSCREW:10-32 X 0.782,0.625 OD,SST	80009	213-0901-00
	----- -----			-	(STANDARD ACCESSORY)		
-9	210-0894-00			4	WASHER,FLAT:0.19 ID X 0.031 THK	09422	ORD BY DESCR
-10	367-0295-00			2	HANDLE,BOW:12.0 L,AL	80009	367-0295-00
					**********(ATTACHING PARTS)**********		
-11	212-0559-00			4	SCREW,MACHINE:10-32 X 0.625 FLH,100DEG,ST	83385	ORD BY DESCR
					**********(END ATTACHING PARTS)**********		
-12	426-1692-00			1	MOUNT,CRT:STEEL	80009	426-1692-00
					**********(ATTACHING PARTS)**********		
-13	212-0560-00			4	SCREW,MACHINE:10-32 X 0.312 INCH,FLH STL	75497	ORD BY DESCR
-14	213-0883-00			4	SCREW,SHOULDER:0.25 X 0.500	83294	ORD BY DESCR
-15	210-3092-00			2	WASHER,FLAT:0.265 X 0.09 AL,0.625	80009	210-3092-00
					**********(END ATTACHING PARTS)**********		
-16	220-0896-00			2	NUT BAR:1.35 L W(2)10-32 THD	80009	220-0896-00
-17	337-2862-00			1	SHIELD,ELEC:CRT	80009	337-2862-00
					**********(ATTACHING PARTS)**********		
-18	211-0504-00			4	SCREW,MACHINE:6-32 X 0.250,PNH STL,CD PL	83385	ORD BY DESCR
-19	220-0625-00			4	NUT,SHEET SPR:6-32 THD,STL	78553	C8090-632-24
					**********(END ATTACHING PARTS)**********		
-20	337-2890-00			1	SHIELD,ELEC:CRT	80009	337-2890-00
					**********(ATTACHING PARTS)**********		
-21	211-0504-00			4	SCREW,MACHINE:6-32 X 0.250,PNH STL,CD PL	83385	ORD BY DESCR
-22	211-0510-00			4	SCREW,MACHINE:6-32 X 0.375,PNH,STL,CD PL	83385	ORD BY DESCR
-23	210-0802-00	B010100	B010130	3	WASHER,FLAT:0.15 ID X 0.312 INCH OD	12327	ORD BY DESCR
	210-0802-00	B010131		4	WASHER,FLAT:0.15 ID X 0.312 INCH OD	12327	ORD BY DESCR
-24	211-0504-00			4	SCREW,MACHINE:6-32 X 0.250,PNH STL,CD PL	83385	ORD BY DESCR
-25	210-0802-00	B010100	B010130	3	WASHER,FLAT:0.15 ID X 0.312 INCH OD	12327	ORD BY DESCR
	210-0804-00	B010131		4	WASHER,FLAT:0.17 ID X 0.375 INCH OD,STL	12327	ORD BY DESCR
					**********(END ATTACHING PARTS)**********		
-26	343-0013-00	B010100	B010160	4	CLAMP,LOOP:0.375 ID,PLASTIC	95987	3-8-6B
	343-0072-00	B010161		4	CLAMP,LOOP:0.5 NYLON	95987	1-2-4NA
					**********(ATTACHING PARTS)**********		
-27	211-0510-00			4	SCREW,MACHINE:6-32 X 0.375,PNH,STL,CD PL	83385	ORD BY DESCR
-28	210-0863-00			4	WSHR,LOOP CLAMP:0.187 ID U/W 0.5 W CLP,STL	95987	C191
					**********(END ATTACHING PARTS)**********		
-29	210-0206-00			1	TERMINAL,LUG:SE #10	86928	A373-147-1
					**********(ATTACHING PARTS)**********		
-30	211-0510-00			1	SCREW,MACHINE:6-32 X 0.375,PNH,STL,CD PL	83385	ORD BY DESCR
					**********(END ATTACHING PARTS)**********		
-31	214-1699-00			4	SPRING,HLEXT:0.188 OD X 4.0" LONG	000AE	V14C
-32	367-0309-01	B010100	B029999	2	HANDLE,CARRYING:5.75 L,ALUMINUM	80009	367-0309-01
	367-0309-02	B030000		2	HANDLE,CARRYING:5.75 L,ALUMINUM	80009	367-0309-02
					**********(ATTACHING PARTS)**********		
-33	212-0040-00	B010131		4	SCREW,MACHINE:8-32 X 0.375 100 DEG,FLH ST	83385	ORD BY DESCR
-34	211-0559-00	B010100	B010130	8	SCREW,MACHINE:6-32 X 0.375"100 DEG,FLH ST	83385	ORD BY DESCR
	211-0559-00	B010131		4	SCREW,MACHINE:6-32 X 0.375"100 DEG,FLH ST	83385	ORD BY DESCR
					**********(END ATTACHING PARTS)**********		

Fig. & Index No.	Tektronix Part No.	Serial/Model No. Eff	Dscont	Qty	1 2 3 4 5	Name & Description	Mfr Code	Mfr Part Number
7-35	343-0852-00			1		RETAINER,MODULE:LEFT,STEEL	80009	343-0852-00
						**********(ATTACHING PARTS)**********		
-36	211-0315-00			1		SCR,ASSEM WSHR:4-40 X 0.437 PNH,STL CD PL	000FF	ORD BY DESCR
-37	211-0012-00	B010100	B010130	2		SCREW,MACHINE:4-40 X 0.375,PNH STL CD PL	83385	ORD BY DESCR
	211-0315-00	B010131		2		SCR,ASSEM WSHR:4-40 X 0.437 PNH,STL CD PL	000FF	ORD BY DESCR
-38	210-0994-00	B010100	B010130	2		WASHER,FLAT:0.125 ID X 0.25" OD,STL	86928	5702-201-20
						**********(END ATTACHING PARTS)**********		
-39	407-2795-00			1		BRACKET,SUPPORT:HANDLE,LEFT,AL	80009	407-2795-00
						**********(ATTACHING PARTS)**********		
-40	212-0008-00			3		SCREW,MACHINE:8-32 X 0.500 INCH,PNH STL	83385	ORD BY DESCR
-41	210-0804-00			3		WASHER,FLAT:0.17 ID X 0.375 INCH OD,STL	12327	ORD BY DESCR
						**********(END ATTACHING PARTS)**********		
-42	407-2796-00			1		BRACKET,SUPPORT:HANDLE,RIGHT,AL	80009	407-2796-00
						**********(ATTACHING PARTS)**********		
-43	212-0008-00			3		SCREW,MACHINE:8-32 X 0.500 INCH,PNH STL	83385	ORD BY DESCR
-44	210-0804-00			3		WASHER,FLAT:0.17 ID X 0.375 INCH OD,STL	12327	ORD BY DESCR
						**********(END ATTACHING PARTS)**********		
-45	386-4701-00			1		STIFFENER,CAB:	80009	386-4701-00
-46	210-0420-00			4		NUT,SHEET SPR:6-32,STL,BLACK OXIDE	78553	C8022-632
-47	348-0736-00			1		GROMMET,RUBBER:BLACK ROUND,1.0 ID	76385	Z-3097
-48	426-1854-00			1		FRAME ASSY,MON:REAR	80009	426-1854-00

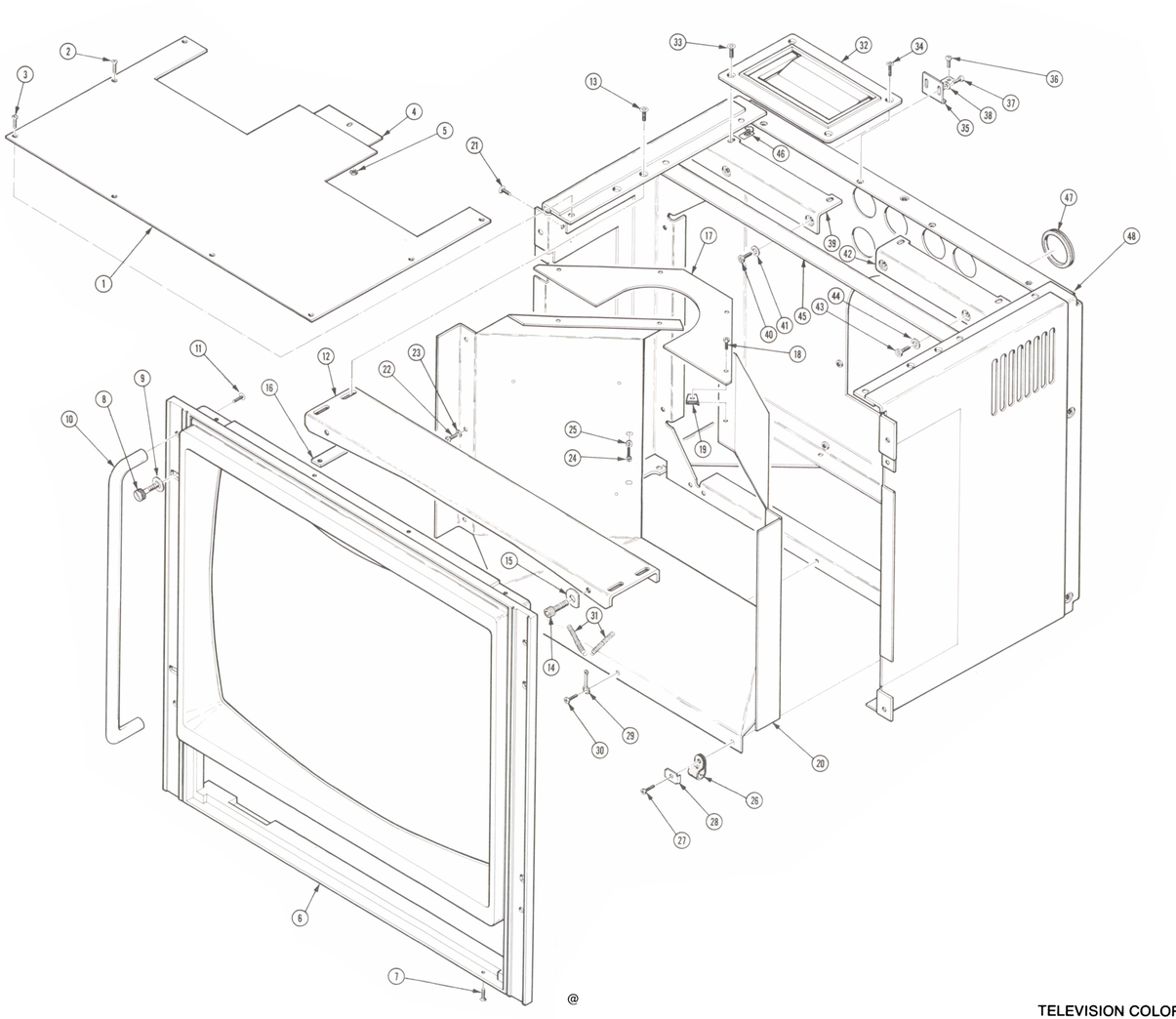
1
2
3
4
5
6
7
8
9
10
11
12
13
14
15
16
17
18
19
20
21
22
23
24
25
26
27
28
29
30
31
32
33
34
35
36
37
38
39
40
41
42
43
44
45
46
47
48

@

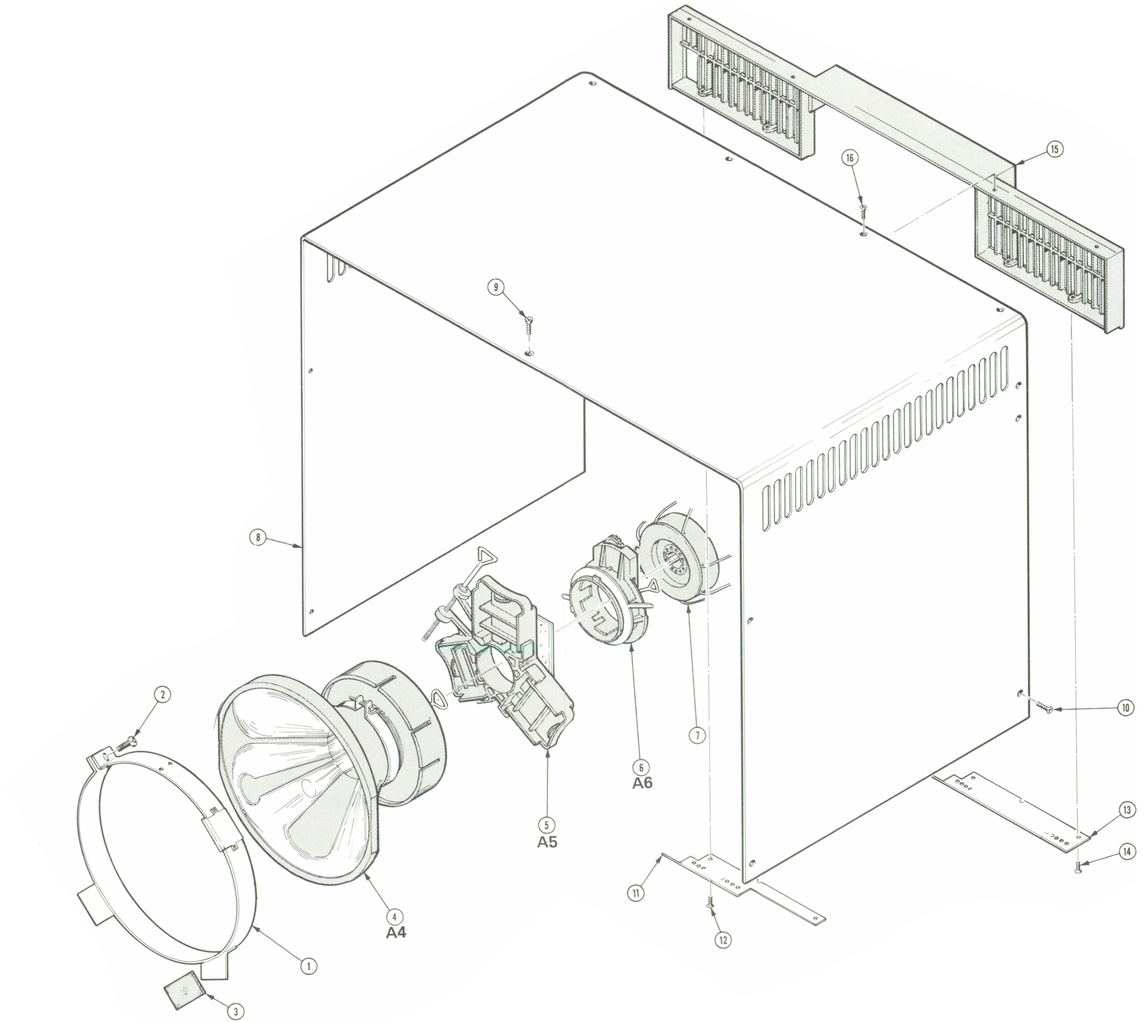

TELEVISION COLOR MONITOR 690SR

@

Fig. & Index No.	Tektronix Part No.	Serial/Model No. Eff	Dscont	Qty	1 2 3 4 5	Name & Description	Mfr Code	Mfr Part Number
8-1	343-0984-01			1		CLAMP,YOKE:W/BRACKETS	80009	343-0984-01
						**********(ATTACHING PARTS)**********		
-2	211-0517-01			1		SCREW,MACHINE:6-32 X 1.0 L,PNH,STL	000CY	937AS632R160
						**********(END ATTACHING PARTS)**********		
-3	253-0176-00			6		TAPE,PRESS SENS:VINYL FOAM,0.5 X 0.062	85471	ORD BY DESCR
-4	----- -----			1		DEFL YOKE ASSY:(SEE A4 REPL)		
-5	----- -----			1		COIL,ASSY:(SEE A5 REPL)		
-6	----- -----			1		MAGNET,CVRSN:(SEE A6 REPL)		
-7	----- -----			1		SKT,PL-IN ELEK:ELCTRN TUBE,12 CONT W/LEADS		
	----- -----			-		(PART OF A12)		
-8	200-2596-00			1		COVER,TOP:REAR,AL	80009	200-2596-00
						**********(ATTACHING PARTS)**********		
-9	211-0512-00			1		SCREW,MACHINE:6-32 X 0.50" 100 DEG,FLH ST	83385	ORD BY DESCR
-10	211-0559-00			9		SCREW,MACHINE:6-32 X 0.375"100 DEG,FLH ST	83385	ORD BY DESCR
						**********(END ATTACHING PARTS)**********		
-11	337-2909-00			1		SHIELD,PROT:ALUMINUM	80009	337-2909-00
						**********(ATTACHING PARTS)**********		
-12	213-0813-00			2		SCREW,TPG,TR:4-20,0.312 L,PLASTITE	93907	ORD BY DESCR
						**********(END ATTACHING PARTS)**********		
-13	337-2908-00			1		SHIELD,PROT:ALUMINUM	80009	337-2908-00
						**********(ATTACHING PARTS)**********		
-14	213-0813-00			2		SCREW,TPG,TR:4-20,0.312 L,PLASTITE	93907	ORD BY DESCR
						**********(END ATTACHING PARTS)**********		
-15	378-2039-00			1		GRILLE,PLASTIC:REAR,UPPER	80009	378-2039-00
						**********(ATTACHING PARTS)**********		
-16	213-0813-00			6		SCREW,TPG,TR:4-20,0.312 L,PLASTITE	93907	ORD BY DESCR
						**********(END ATTACHING PARTS)**********		

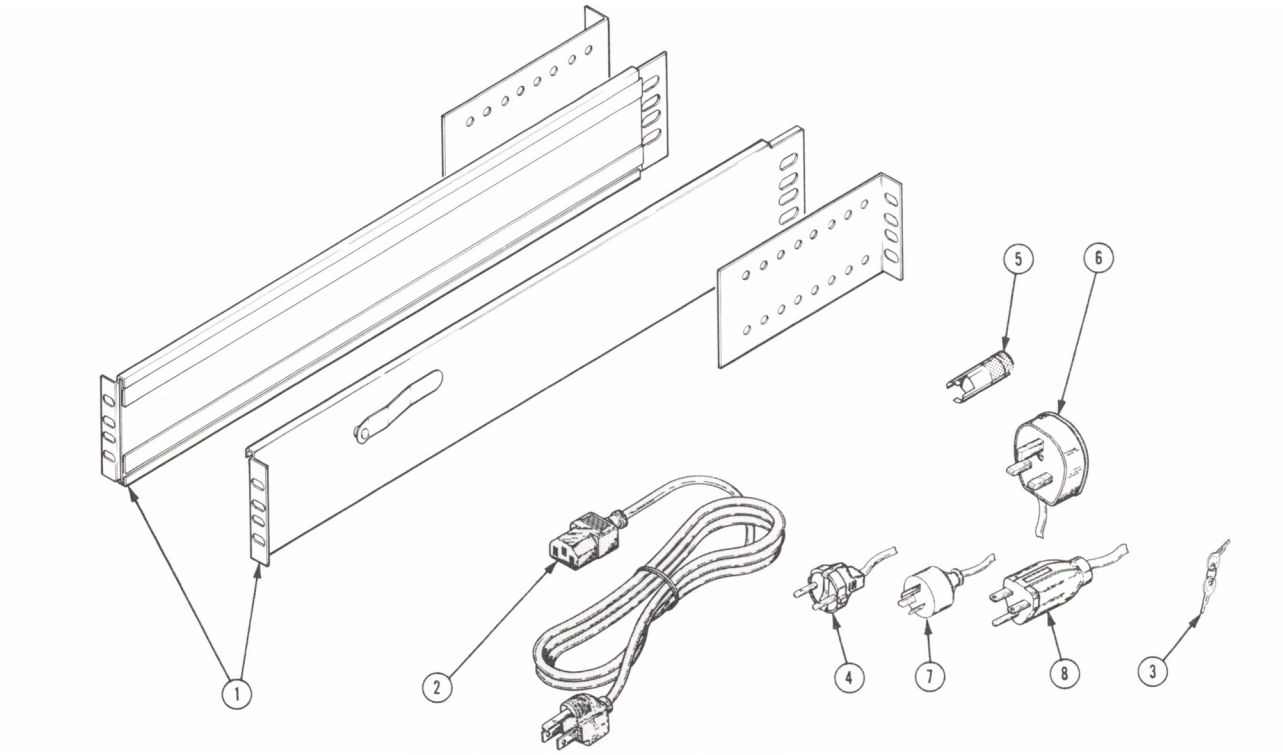

Fig. & Index No.	Tektronix Part No.	Serial/Model No. Eff	Dscont	Qty	1 2 3 4 5	Name & Description	Mfr Code	Mfr Part Number
						STANDARD ACCESSORIES		
1-1	351-0395-00			1		SLIDE,DWR,EXT:20.0 X 3.25	80009	351-0395-00
-2	161-0104-00			1		CABLE ASSY,PWR,:3 WIRE,98.0" LONG	16428	KH8352
-3	214-3292-00			2		KEY,LOCK:	81741	#KA 1269
	213-0901-00			4		THUMBSCREW:10-32 X 0.782,0.625 OD,SST	80009	213-0901-00
	----- -----			-		(SEE FIG. 7-8 RMPL)		
	070-3821-00			1		MANUAL,TECH:INSTRUCTION	80009	070-3821-00
						OPTIONS		
-4	161-0104-00			1		CABLE ASSY,PWR,:3 WIRE,98.0" LONG	16428	KH8352
	----- -----			-		(OPTION A1 ONLY)		
-5	200-2265-00			1		CAP,FUSEHOLDER:5 X 20MM FUSES	S3629	FEK 031.1663
	----- -----			-		(OPTION A1,A2,A3 ONLY)		
-6	161-0104-07			1		CABLE ASSY,PWR:3 X 0.75MM SQ,240V,98.0 L	80126	OBD
	----- -----			-		(OPTION A2 ONLY)		
-7	161-0104-05			1		CABLE ASSY,PWR:3,18 AWG,240V,98.0 L	86221	OBD
	----- -----			-		(OPTION A3 ONLY)		
-8	161-0104-08			1		CABLE ASSY,PWR:3,18 AWG,240V,98.0 L	80126	OBD
	----- -----			-		(OPTION A4 ONLY)		
						OPTIONAL ACCESSORIES		
	067-0999-00			-		FIXTURE,CAL:RIGID MODULE EXTENDER	80009	067-0999-00
	067-0998-00			-		FIXTURE,CAL:MINIMUM LOAD UNIT	80009	067-0998-00
	067-1000-00			-		FIXTURE,CAL:FLEXIBLE INTERFACE MODULE	80009	067-1000-00
	067-1034-00			-		FIXTURE,CAL:CRT SCALE,11 X 15 LINE	80009	067-1034-00
	067-1054-00			-		FIXTURE,CAL:CRT SCALE,14 X 17 LINE	80009	067-1054-00
	067-1055-00			-		FIXTURE,CAL:CRT SCALE,15 X 20 LINE	80009	067-1055-00

MANUAL CHANGE INFORMATION

At Tektronix, we continually strive to keep up with latest electronic developments by adding circuit and component improvements to our instruments as soon as they are developed and tested.

Sometimes, due to printing and shipping requirements, we can't get these changes immediately into printed manuals. Hence, your manual may contain new change information on following pages.

A single change may affect several sections. Since the change information sheets are carried in the manual until all changes are permanently entered, some duplication may occur. If no such change pages appear following this page, your manual is correct as printed.

Tektronix®
COMMITTED TO EXCELLENCE

MANUAL CHANGE INFORMATION

Date: 3-23-82 Change Reference: M45570

Product: 690SR Manual Part No.: 070-3821-00

DESCRIPTION

EFF SN B010180

MECHANICAL PARTS LIST CHANGES

CHANGE TO:

-63	426-1855-01	FRAME ASSY,MON:BOTTOM

STANDARD 690SR, OPTIONS 01, 02 & 11

1 ea	334-4859-00	MARKER, IDENT(UL 242T)
1 ea	334-3143-00	MARKER, IDENT(CSA)
1 ea	334-4861-00	MARKER, IDENT(TV RATE)

Tektronix®
COMMITTED TO EXCELLENCE

MANUAL CHANGE INFORMATION

Date: 12-3-82 Change Reference: M48241

Product: 690SR TV MONITOR Manual Part No.: 070-3821-00

DESCRIPTION

EFF SN B020529

ELECTRICAL PARTS LIST CHANGES

CHANGE TO:

A7*	119-1442-10	CKT BOARD ASSY:POWER SUPPLY
A7A2	672-0874-08	MODULE ASSY:HIGH VOLTAGE POWER (NEW VERSION)
A7A2A3	119-1441-03	POWER SUPPLY SUB ASSY:30KV (NEW VERSION)

CHASSIS PARTS CHANGES

ADD:

R100	119-1639-00	RES,BLEEDER:HIGH VOLTAGE LEAD

*Previously not in manual.

000-2775-00D